迅通航®
—Aero Plug—

INNOVATION-DRIVEN AND
LEADING THE FUTURE

深圳市迅通航电子科技有限公司

Shenzhen Xuntonghang Electronic Technology Co., Ltd.

ELECTRICAL CONNECTOR PRODUCT MANUAL >>>

Shenzhen Xuntonghang Electronic Technology Co., Ltd.

迅通航®
—Aero Plug—

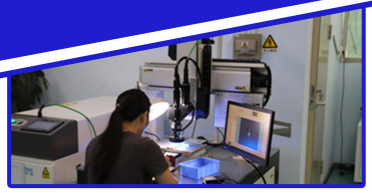

Shenzhen Xuntonghang Electronic Technology Co., Ltd.

Shenzhen Xuntonghang Electronic Technology Co., Ltd. is an innovative enterprise specializing in the research and production of micro - rectangular connectors. Different from other manufacturers in the industry, our company has achieved independent research and development of the entire production chain, from production equipment to core products. It is currently the only micro - rectangular connector manufacturer in the market with the ability to independently develop and produce equipment.

Relying on profound technological accumulation, the company has established a complete industry covering the manufacturing of power electronic components, supporting production of integrated circuits, and research and development of intelligent equipment. The independently developed production equipment not only ensures the high precision and stability of products but also, through customized technological iterations, meets the stringent requirements of high - reliability, miniaturization, and compounding of micro - rectangular connectors in high - end fields such as aerospace, intelligent equipment, and new energy.

As an enterprise with technological innovation as its core driving force, Xuntonghang continues to delve deep into mechanical automation, precision processing technology, etc., and is committed to providing customers with a one - stop solution from equipment research and development to product manufacturing. In the future, the company will continue to give full play to its advantage of independent equipment research and development, accelerate the breakthrough of industry - wide technical barriers, and promote the localization process of micro - rectangular connectors to a new height.

迅通航®
—Aero Plug—

INNOVATION-DRIVEN AND LEADING THE FUTURE

▲ the front desk of the company

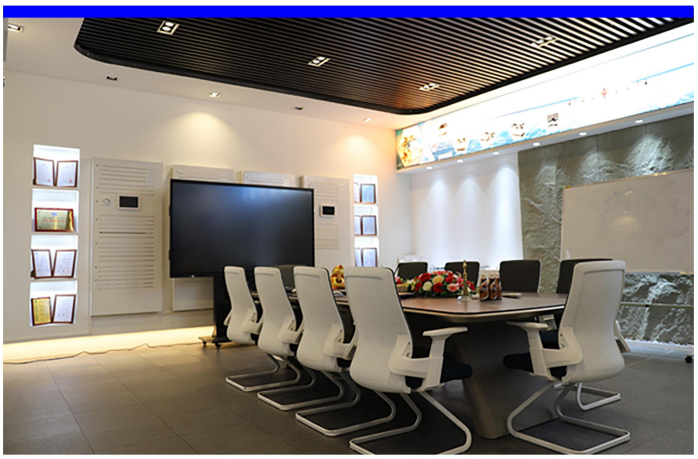

▲ conference room

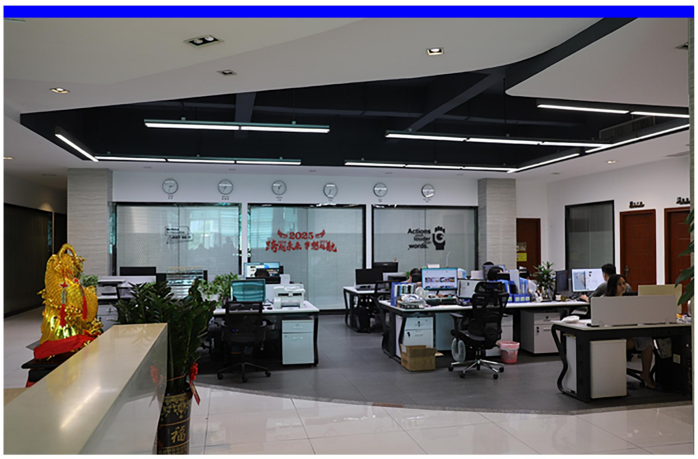

▲ Office area

▲ Twisted Pin Workshop

▲ Processing Workshop

▲ Assembly workshop

迅通航®
—Aero Plug—

PRODUCT CATALOG

J63A double-row series micro-rectangular electrical connectors

Product features:

- The specifications include 9, 15, 21, 25, 31, 37, 51, 65 and 69 cores;
- It adopts a twisted needle structure with a spacing of 0.635mm;
- It takes up little space. The head and base are connected by screw and nut screwing, providing smooth insertion and extraction and reliable locking;
- The product features high density, small volume, light weight and high reliability;
- The product is a head-mounted needle and a base-mounted hole fixed combination. The one with a locking screw is the free end, and the one with a connecting nut is the fixed end. The free end and the fixed end are screwed in and locked by screws and nuts;
- Execution standard: GJB 7245-2011 "General Specification for Shell Positioning Ultra-Micro Rectangular Electrical Connectors";
- The wire size of the crimped product is 0.035mm ²

Technical features:

- Ambient temperature: -55℃+125℃
- Vibration: 10Hz～2000Hz 196m/s2
- Random vibration: Power spectral density 0.4g /Hz, root mean square value of total acceleration rate 23.1G
- Impact: 980m/s ² 6ms
- Rated current: 1A
- Contact resistance: ≤ 21mΩ
- Insulation resistance: ≥ 5000MΩ 100VDC
- Withstand voltage: 250V
- Mechanical life: 200 times

Arrangement of specification holes:

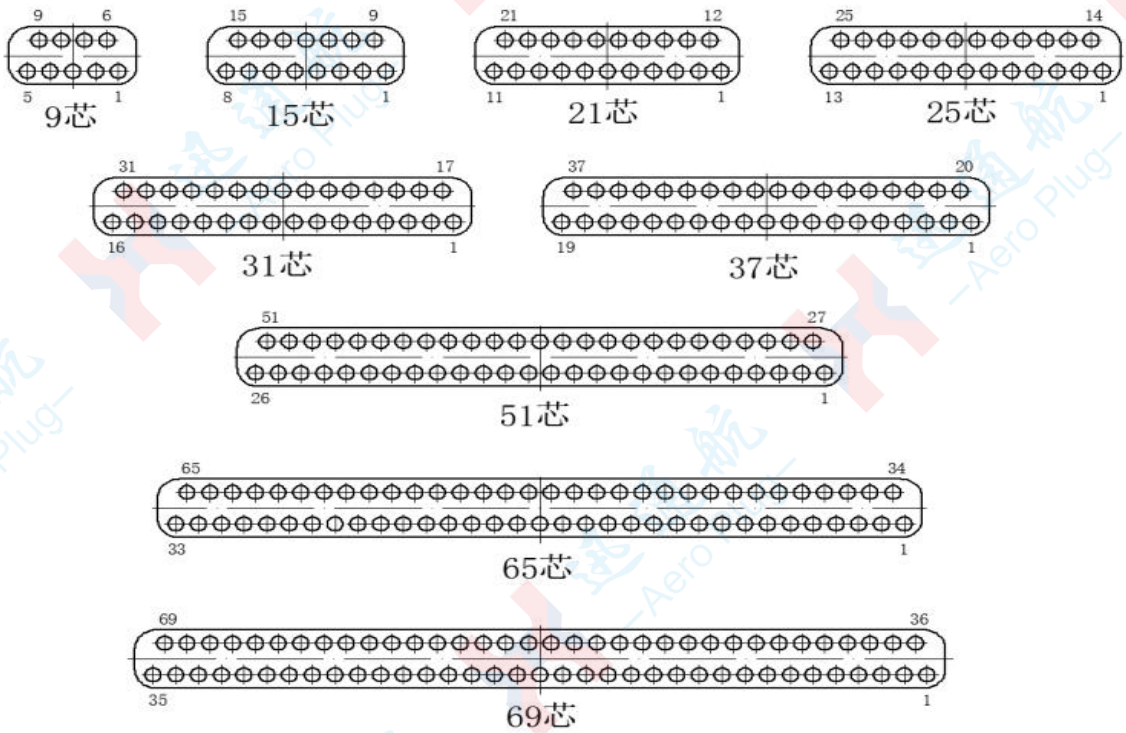

Note: Viewed from the plug mating end

Model naming:

J63A - X X X – XXX - XX X XXX

① ② ③ ④ ⑤ ⑥ ⑦ ⑧

① Main name code: J63A

② Contact piece arrangement: 2 - two rows of contact pieces

③ Product type:

1 - Straight plug (crimp type/straddle type)
2 - Straight sockets (crimp type/straddle-type)
3 - Install the crimped plug horizontally
4 - Install the crimped socket horizontally
5 - Vertical installation crimping plug with tail cover
6 - Vertical installation crimping socket with tail cover
7 - Horizontal installation crimping plug with tail cover
8 - Horizontal installation crimping socket with tail cover
9 - Vertical installation crimping plug
0 - Vertical installation crimping plug with tail cover
A - Vertical surface mount plug
B - Vertical surface mount socket
C - Horizontal surface mount plug
D - Horizontal surface mount socket
E - Bent plug-in printed circuit board type plug
F - Bent plug-in printed Circuit board type socket
G - Through-hole printed circuit board type plug
H - Through-hole printed circuit board socket
J - Crimped integral

④ Shell coating: 2 - electroless nickel plating

⑤ The number of contact pieces: 9, 15, 21, 25, 31, 37, 51, 65, 69, etc.
The number of contact pieces is expressed by a three-digit number

⑥ Contact piece termination form: 12 - vertical/horizontal/straddle-type surface mount pins
22 - Vertical/Horizontal/straddle-type surface mount jacks
13 - Through-hole printed circuit board type pins, pin length 2.77mm
23—Through-hole printed circuit board jack, pin length 2.77mm
14—Through-hole printed circuit board type pins, pin length 3.56mm
24—Through-hole printed circuit board type jack, pin length 3.56mm
15—Through-hole printed circuit board type pins, pin length 4.37mm
25—Through-hole printed circuit board type jack, pin length 4.37mm
16—Crimp type pins
26—Crimp type socket
32—Bent insertion printed circuit board type pins, pin length 2.77mm
43—Bent plug-in printed circuit board type jack, pin length 2.77mm
33—Bent insertion printed circuit board type pins, pin length 3.56mm
44—Bent plug-in printed circuit board type jack, pin length 3.56mm
34—Bent insertion printed circuit board type pins, pin length 4.37mm
45—Bent plug-in printed circuit board type jack, pin length 4.37mm
PP—The plugs are connected to each other
PS—The plug is connected to the socket
SS—Sockets are connected to each other

⑦ Contact piece plating: 1 - Gold plating

⑧ Locking part type: 00 - No locking part; JC - Locking screw (straight slot); JC1 - Locking screw (hexagon socket, not recommended); TH - Connecting nut; TH1 - Connection nut with welding installation function; SH - Guide sleeve with welding installation function; NH - Guide sleeve with nut mounting; DZ - Guide Column DK- Guide hole. (All locking parts are non-detachable.

Product selection and matching

The product is connected by screwing screws and nuts to achieve progressive connection, avoiding impact on the product and ensuring that the product and surrounding components are not damaged. Therefore, when selecting products, one end should be a connecting nut (TH), and the other end should be equipped with a locking screw (JC).

For products with guiding accessories, the products only come with guiding accessories. After connection, the mounting plate needs to be fixed to prevent the connector from coming out. It is usually equipped with a guide column at one end and a guide hole at the other end.

Partial product pairing table:

Main model	Pairable models
①Crimping plug with locking screw: J63A-212-×××-161-JC ②Crimping plug with locking screw: J63A-212-×××-121-JC ③Flexible printed circuit board plug with locking screw and bent insert J63A-2E2-×××-321-JC ④Straddle-type flexible surface mount plug: J63A-212-×××-121-JC	J63A-222-×××-261-TH（Vertical installation crimp socket）
	J63A-242-×××-261-TH（Install the crimped socket horizontally）
	J63A-2B2-×××-221-TH（Vertical surface mount socket）
	J63A-2D2-×××-221-TH（Horizontal surface mount socket）
	J63A-2F2-×××-431-TH（Bendable printed circuit board socket）
	J63A-2H2-×××-231-TH（Through-hole printed circuit board socket）
	J63A-222-×××-221-TH（Straddle-type flexible surface mount socket）
①Crimping socket with locking screw: J63A-222-×××-261-JC	J63A-232-×××-161-TH（Install the crimped plug horizontally）
	J63A-2A2-×××-121-TH（Vertical surface mount plug）
	J63A-2C2-×××-121-TH（Horizontal surface mount plug）
	J63A-2E2-×××-321-TH（Bend into the printed circuit board plug）
	J63A-2G2-×××-131-TH（Through-hole printed circuit board plug）
	J63A-292-×××-161-TH（Install the crimping plug vertically）

J63A crimp plug

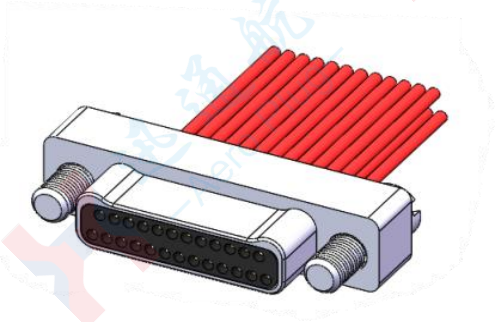

J63A - 2 1 2 - 025 - 16 1 - JC

- J63A: Main code name
- 2: Two rows of contacts pieces
- 1: Crimp plug
- 2: The aluminum shell is nickel-plated
- 025: Number of contacts
- 16: Crimping the pins
- 1: Gold plating of contact pieces
- JC: Locking screw

Product features:

The free end of the product is not fixed and is usually connected to a socket with a connecting nut;

The screws are fixed on the shell and cannot be disassembled;
A flat-groove locking screw (JC) is often selected and can be tightened with a small screwdriver.

The overall dimensions of this series:

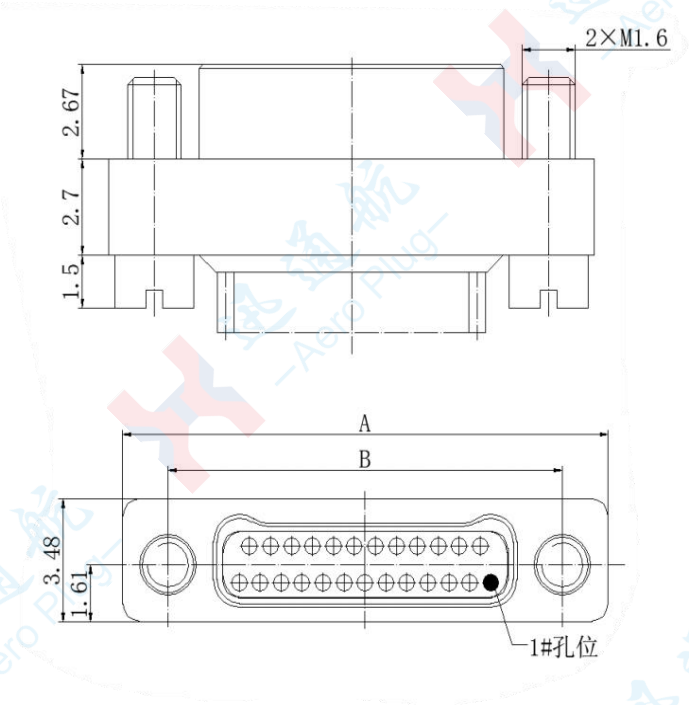

Specification and model	Size	
	A	B
J63A-212-009-161-JC	9.63	6.86
J63A-212-015-161-JC	11.53	8.76
J63A-212-021-161-JC	13.44	10.67
J63A-212-025-161-JC	14.71	11.94
J63A-212-031-161-JC	16.61	13.84
J63A-212-037-161-JC	18.52	15.75
J63A-212-051-161-JC	22.96	20.19
J63A-212-065-161-JC	27.41	24.64
J63A-212-069-161-JC	28.68	25.91

J63A crimp plug

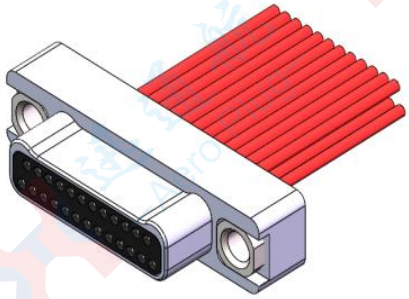

J63A - 2 1 2 - 025 -16 1 - TH

- J63A: Main code name
- 2: Two rows of contacts pieces
- 1: Crimp plug
- 2: The aluminum shell is nickel-plated
- 025: Number of contacts
- -16: Crimping the pins
- 1: Gold plating of contact pieces
- TH: Connecting nut

Product features:

The free end of the product is not fixed and is usually connected to a socket with a locking screw;

The connecting nut is fixed on the housing and cannot be disassembled.

The overall dimensions of this series:

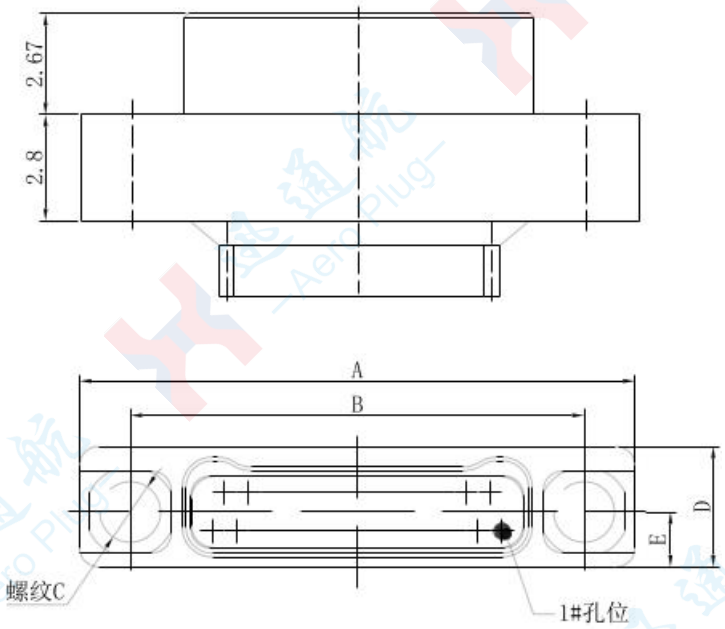

Specification and model	Size	
	A	B
J63A-212-009-161-TH	9.63	6.86
J63A-212-015-161-TH	11.53	8.76
J63A-212-021-161-TH	13.44	10.67
J63A-212-025-161-TH	14.71	11.94
J63A-212-031-161-TH	16.61	13.84
J63A-212-037-161-TH	18.52	15.75
J63A-212-051-161-TH	22.96	20.19
J63A-212-065-161-TH	27.41	24.64
J63A-212-069-161-TH	28.68	25.91

J63A crimp socket

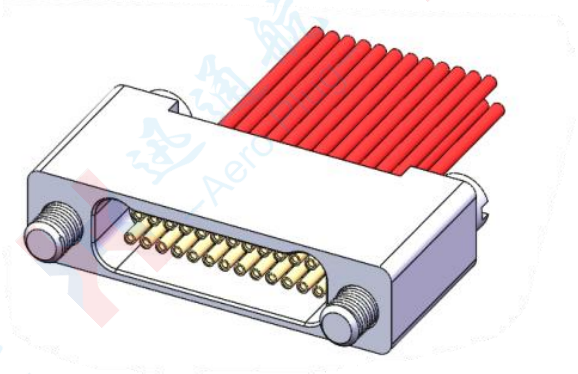

J63A - 2 2 2 - 025 - 26 1 - JC

- J63A: Main code name
- 2: Two rows of contacts pieces
- 2: Crimp socket
- 2: The aluminum shell is nickel-plated
- 025: Number of contacts
- 26: Crimping the socket
- 1: Gold plating of contact pieces
- JC: Locking screw

Product features:

The free end of the product is not fixed and is usually connected to a plug with a connecting nut. The screws are fixed on the shell and cannot be disassembled.

A flat-groove locking screw (JC) is often selected and can be tightened with a small screwdriver.

The overall dimensions of this series:

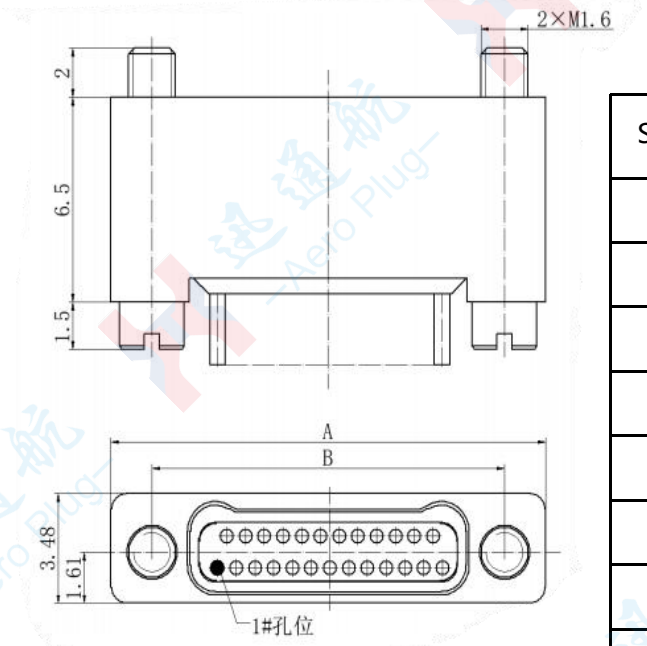

Specification and model	size	
	A	B
J63A-222-009-261-JC	9.63	6.86
J63A-222-015-261-JC	11.53	8.76
J63A-222-021-261-JC	13.44	10.67
J63A-222-025-261-JC	14.71	11.94
J63A-222-031-261-JC	16.61	13.84
J63A-222-037-261-JC	18.52	15.75
J63A-222-051-261-JC	22.96	20.19
J63A-222-065-261-JC	27.41	24.64
J63A-222-069-261-JC	28.68	25.91

J63A vertical crimp socket

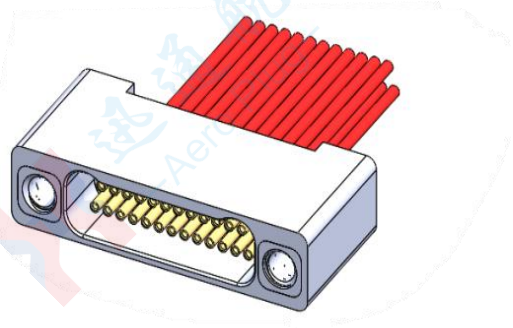

J63A - 2 2 2 - 025 -26 1 - TH

- J63A: Main code name
- 2: Two rows of contacts pieces
- 2: Crimp socket
- 2: The aluminum shell is nickel-plated
- 025: Number of contacts
- -26: Crimping the socket
- 1: Gold plating of contact pieces
- TH: Connecting nut

Product features:

The connecting nut is of a through thread structure. The front thread is used for locking with the locking screw, and the rear thread is used for installation. Connect with the plug with a locking screw.

The overall dimensions of this series:

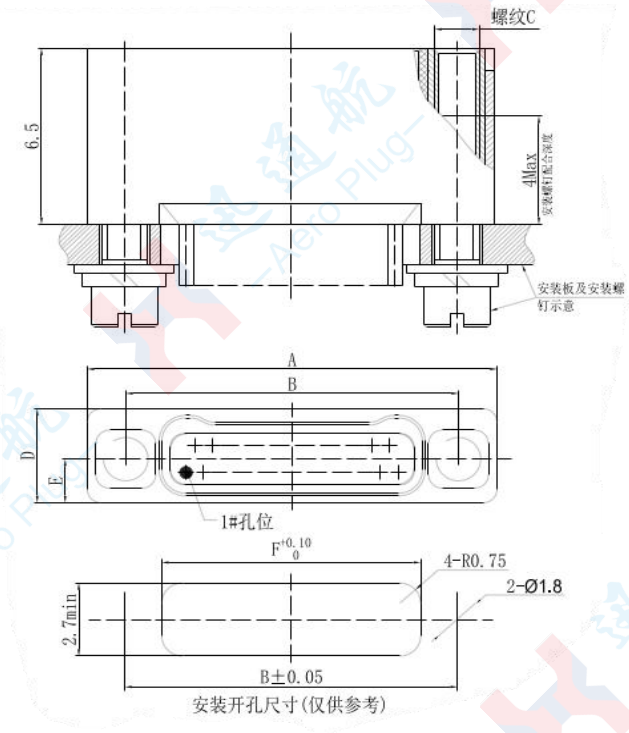

Specification and model	Size		
	A	B	C
J63A-222-009-261-TH	9.63	6.86	4.2
J63A-222-015-261-TH	11.53	8.76	6.1
J63A-222-021-261-TH	13.44	10.67	8
J63A-222-025-261-TH	14.71	11.94	9.3
J63A-222-031-261-TH	16.61	13.84	11.2
J63A-222-037-261-TH	18.52	15.75	13.1
J63A-222-051-261-TH	22.96	20.19	17.55
J63A-222-065-261-TH	27.41	24.64	22
J63A-222-069-261-TH	28.68	25.91	23.25

J63A vertical installation crimp plug

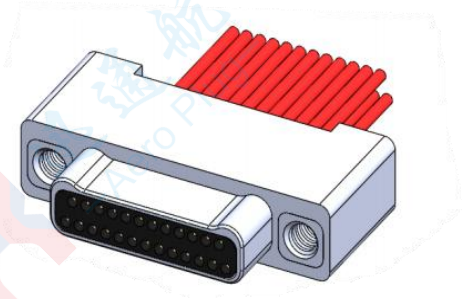

J63A - 2 9 2 - 025 - 16 1 - TH

- J63A: Main code name
- 2: Two rows of contact pieces
- 9: Vertical crimp plug
- 2: The aluminum shell is nickel-plated
- 025: Number of contact pieces
- 16: Crimping the pins
- 1: Gold plating of contact pieces
- TH: Connecting nut

Product features:

The connecting nut is of a through thread structure. The front thread is used for locking with the locking screw, and the rear thread is used for installation. This product is connected to a socket with a locking screw。

The overall dimensions of this series:

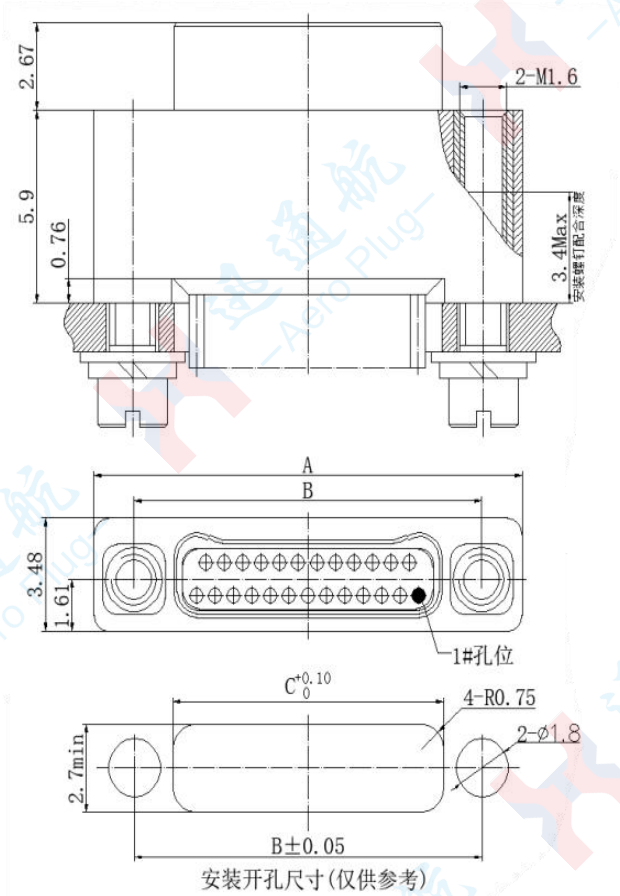

Specification and model	Size		
	A	B	C
J63A-292-009-161-TH	9.63	6.86	4.2
J63A-292-015-161-TH	11.53	8.76	6.1
J63A-292-021-161-TH	13.44	10.67	8
J63A-292-025-161-TH	14.71	11.94	9.3
J63A-292-031-161-TH	16.61	13.84	11.2
J63A-292-037-161-TH	18.52	15.75	13.1
J63A-292-051-161-TH	22.96	20.19	17.55
J63A-292-065-161-TH	27.41	24.64	22
J63A-292-069-161-TH	28.68	25.91	23.25

J63A horizontal installation crimping plug

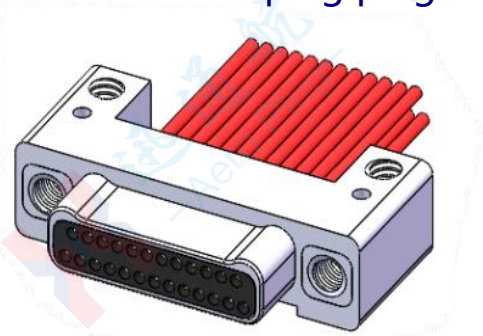

J63A - 2 3 2 - 025 - 16 1 - TH

- J63A: Main code name
- 2: Two rows of contact pieces
- 3: Horizontal crimp plug
- 2: The aluminum shell is nickel-plated
- 025: Number of contact pieces
- 16: Crimping the pins
- 1: Gold plating of contact pieces
- TH: Connecting nut

Product features:

Horizontal installation: When installing, the long row end of the contact parts should be attached to the installation plate. Connect to the socket with a locking screw.

The overall dimensions of this series:

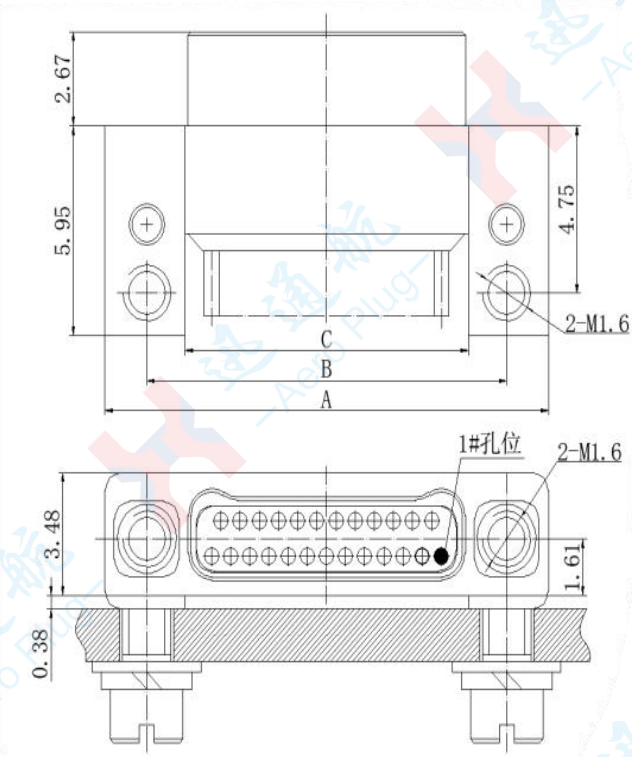

Specification and model	Size		
	A	B	C
J63A-232-009-161-TH	9.63	6.86	4.31
J63A-232-015-161-TH	11.53	8.76	6.22
J63A-232-021-161-TH	13.44	10.67	8.13
J63A-232-025-161-TH	14.71	11.94	9.4
J63A-232-031-161-TH	16.61	13.84	11.3
J63A-232-037-161-TH	18.52	15.75	13.21
J63A-232-051-161-TH	22.96	20.19	17.65
J63A-232-065-161-TH	27.41	24.64	22.1
J63A-232-069-161-TH	28.68	25.91	23.37

J63A horizontal installation crimp socket

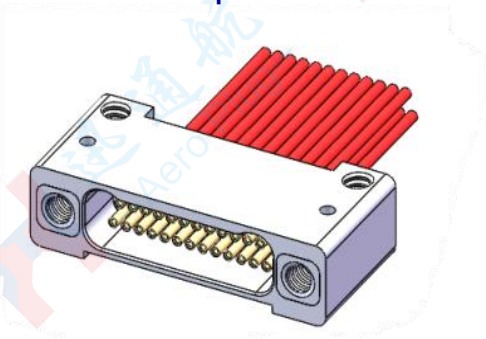

J63A - 2 4 2 - 025 - 26 1 - TH

- J63A: Main code name
- 2: Two rows of contact pieces
- 4: Horizontal crimp socket
- 2: The aluminum shell is nickel-plated
- 025: Number of contact pieces
- 26: Crimping the socket
- 1: Gold plating of contact pieces
- TH: Connecting nut

Product features:

Horizontal installation: When installing, the long row end of the contact parts should be attached to the installation plate.

Connect with the plug with a locking screw.

The overall dimensions of this series:

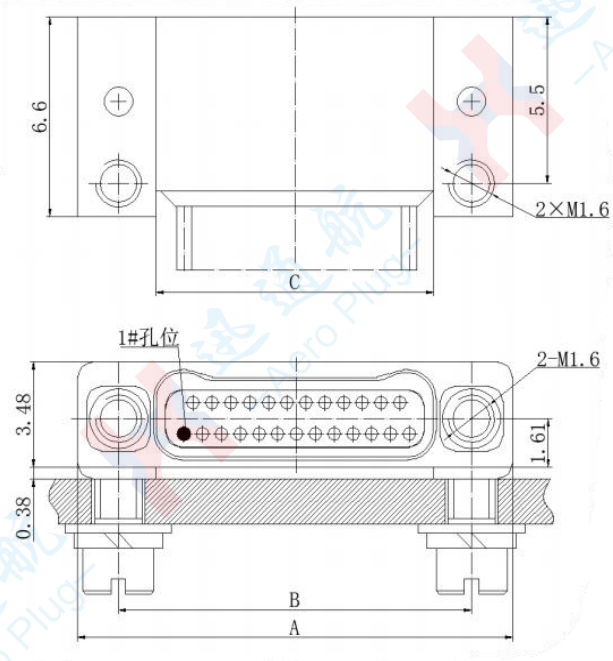

Specification and modelc	Size		
	A	B	C
J63A-242-009-261-TH	9.63	6.86	4.31
J63A-242-015-261-TH	11.53	8.76	6.22
J63A-242-021-261-TH	13.44	10.67	8.13
J63A-242-025-261-TH	14.71	11.94	9.4
J63A-242-031-261-TH	16.61	13.84	11.3
J63A-242-037-261-TH	18.52	15.75	13.21
J63A-242-051-261-TH	22.96	20.19	17.65
J63A-242-065-261-TH	27.41	24.64	22.1
J63A-242-069-261-TH	28.68	25.91	23.37

J63A press-connected type

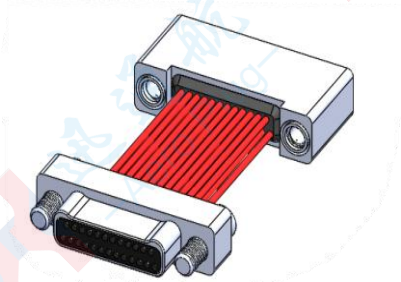

J63A - 2 J 2 - 025 - PS 1

- J63A: Main code name
- 2: Two rows of contact pieces
- J: Integral connector
- 2: The aluminum shell is nickel-plated
- 025: Number of contact pieces
- PS: Head and seat connected (PP- head connected; SS- seat connected)
- 1: Gold plating of contact pieces

Product features:

The locking parts of this logo series are matched as follows: plugs with locking screws, sockets with connecting nuts, and the form is unique. The connection point numbers correspond one-to-one. Other requirements should be ordered in accordance with "Other Order Marking Forms".

The models at both ends of the connector are marked according to the product name. If you order J63A-2J2-025-PS1, both the plug and socket models are marked as J63A-2J2-025-PS1.

Other forms of order marking: When ordering split-type cables, the specific product models of the split-type products can also be listed separately, and it is sufficient to indicate that they are made into split-type electric cables, without necessarily following the aforementioned "order marking". For example, J63A-212-025-161-JC and J63A-222-025-161-TH are connected, with the dot numbers corresponding one-to-one. It is recommended to place orders in this way, which can meet various special requirements.

The overall dimensions of this series:

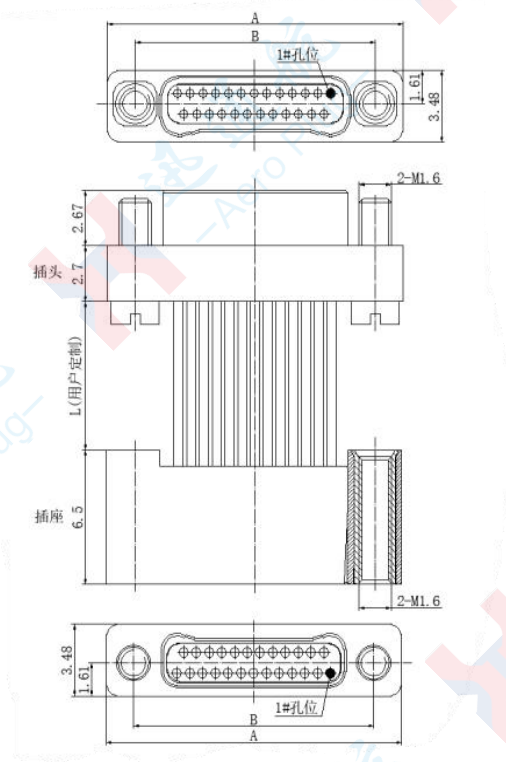

Specification and model	Size	
	A	B
J63A-2J2-009-PS1	9.63	6.86
J63A-2J2-015-PS1	11.53	8.76
J63A-2J2-021-PS1	13.44	10.67
J63A-2J2-025-PS1	14.71	11.94
J63A-2J2-031-PS1	16.61	13.84
J63A-2J2-037-PS1	18.52	15.75
J63A-2J2-051-PS1	22.96	20.19
J63A-2J2-065-PS1	27.41	24.64
J63A-2J2-069-PS1	28.68	25.91

J63A Floating Mounting crimp Plug series

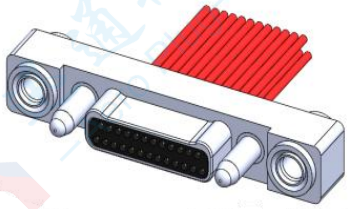

J63A - 2 U 2 - 025 - 16 1 - 00

- J63A: Main code name
- 2: Two rows of contact pieces
- U: Floating mounting plug
- 2: The aluminum shell is nickel-plated
- 025: Number of contact pieces
- 16: Crimping the pins
- 1: Gold plating of contact pieces
- 00: No locking condition

Product features:

This connector is equipped with a guide column and a floating rivet tube, and is used when blind fitting is required. It is generally connected to a socket with a guide hole。

The overall dimensions of this series:

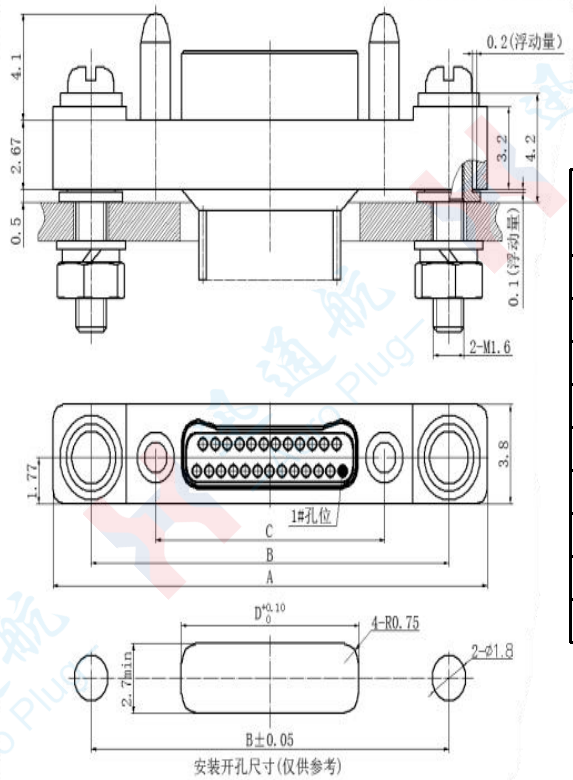

Specification and model	Size			
	A	B	C	D
J63A-2U2-009-261-00	17.6	13.6	6.86	4.2
J63A-2U2-015-261-00	19.5	15.5	8.76	6.1
J63A-2U2-021-261-00	21.4	17.4	10.67	8
J63A-2U2-025-261-00	22.7	18.7	11.94	9.3
J63A-2U2-031-261-00	24.6	20.6	13.84	11.2
J63A-2U2-037-261-00	26.5	22.5	15.75	13.1
J63A-2U2-051-261-00	30.9	26.9	20.19	17.55
J63A-2U2-065-261-00	35.4	31.4	24.64	22
J63A-2U2-069-261-00	36.7	32.7	25.91	23.25

J63A series of crimped sockets with guide hole flange installation

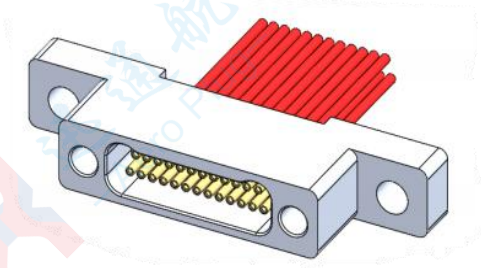

J63A - 2 W 2 - 025 - 26 1 - 00

- J63A: Main code name
- 2: Two rows of contact pieces
- W: Flange-mounted socket
- 2: The aluminum shell is nickel-plated
- 025: Number of contact pieces
- 26: Crimping the socket
- 1: Gold plating of contact pieces
- 00: No locking condition

Product features:

This connector is equipped with guide holes and is generally used in conjunction with plugs with guide posts。

The overall dimensions of this series:

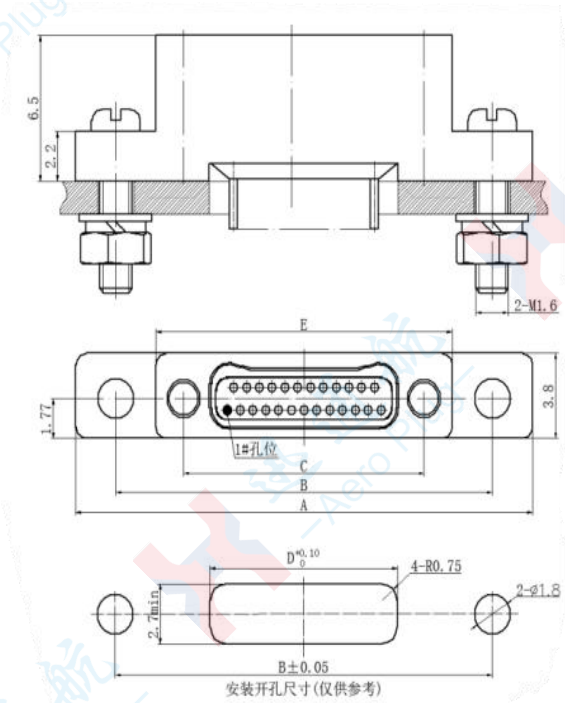

Specification and size	Size				
	A	B	C	D	E
J63A-2W2-009-261-00	17.6	13.6	6.86	4.2	9.63
J63A-2W2-015-261-00	19.5	15.5	8.76	6.1	11.53
J63A-2W2-021-261-00	21.4	17.4	10.67	8	13.44
J63A-2W2-025-261-00	22.7	18.7	11.94	9.3	14.71
J63A-2W2-031-261-00	24.6	20.6	13.84	11.2	16.61
J63A-2W2-037-261-00	26.5	22.5	15.75	13.1	18.52
J63A-2W2-051-261-00	30.9	26.9	20.19	17.6	22.96
J63A-2W2-065-261-00	35.4	31.4	24.64	22	27.41
J63A-2W2-069-261-00	36.7	32.7	25.91	23.3	28.68

J63A press-fitting socket with guide hole nut installation

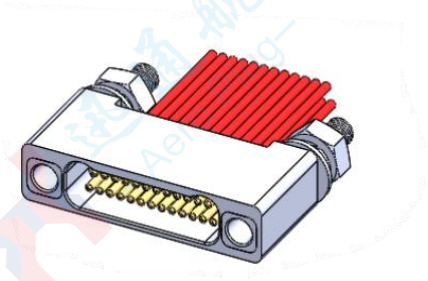

J63A - 2 2 2 - 025 - 26 1 - NH

- J63A: Main code name
- 2: Two rows of contact pieces
- 2: Crimp socket
- 2: The aluminum shell is nickel-plated
- 025: Number of contact pieces
- 26: Crimping the socket
- 1: Gold plating of contact pieces
- NH: Install the guide sleeve with nuts

Product features:

Connectors are equipped with guide holes and are generally connected to plugs with guide posts.

The overall dimensions of this series:

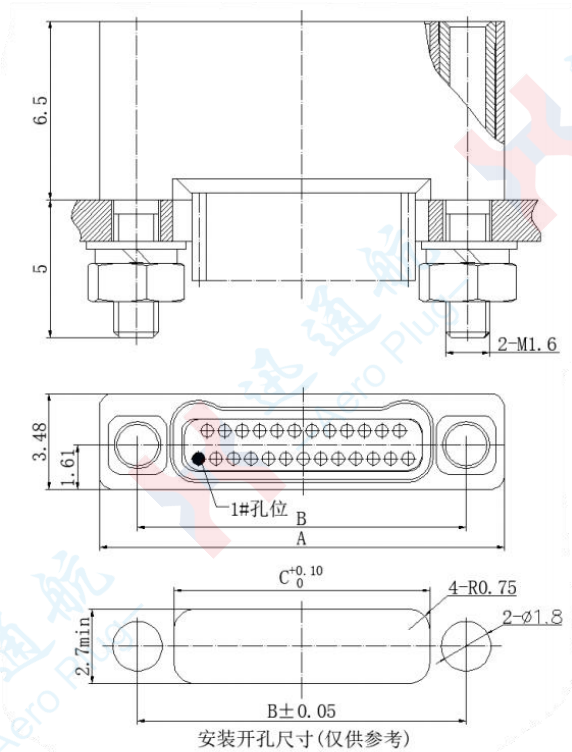

Specification and model	Size		
	A	B	C
J63A-222-009-261-NH	9.63	6.86	4.2
J63A-222-015-261-NH	11.53	8.76	6.1
J63A-222-021-261-NH	13.44	10.67	8
J63A-222-025-261-NH	14.71	11.94	9.3
J63A-222-031-261-NH	16.61	13.84	11.2
J63A-222-037-261-NH	18.52	15.75	13.1
J63A-222-051-261-NH	22.96	20.19	17.55
J63A-222-065-261-NH	27.41	24.64	22
J63A-222-069-261-NH	28.68	25.91	23.25

J63A vertical surface mount plug

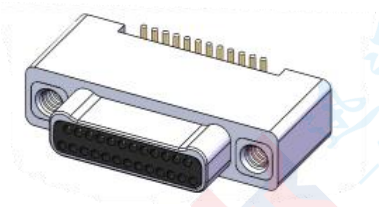

J63A-2A2-025-121-TH

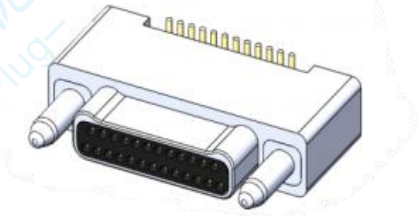

J63A-2A2-025-121-DZ

J63A - 2 A 2 - 025 - 12 1 - TH/DZ

- J63A: Main code name
- 2: Two rows of contact pieces
- A: Vertical surface mount plug
- 2: The aluminum shell is nickel-plated
- 025: Number of contact pieces
- 12: Vertical surface mount type pins
- 1: Gold plating of contact pieces
- TH/DZ: Connecting nut/guide column

Product features:

The product is soldered and used using SMT technology;

Connect J63A-2A2-025-121-TH to the socket with a locking screw.
The pins of J63A-2A2-025-121-DZ are soft and prone to deformation when connected to sockets with guide holes. When in use, the pins need to be protected.

The overall dimensions of this series:

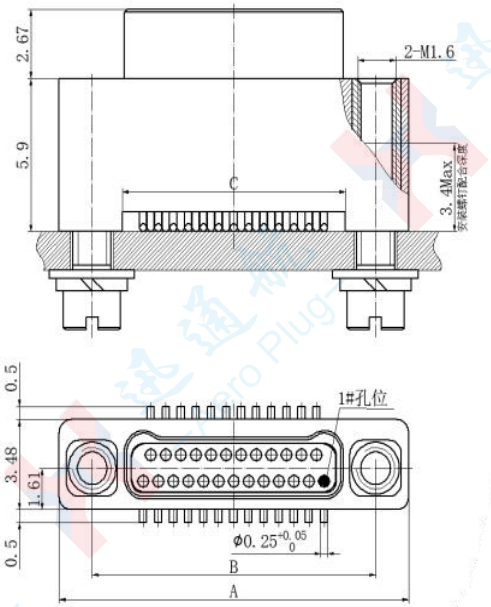

J63A-2A2-025-121-TH

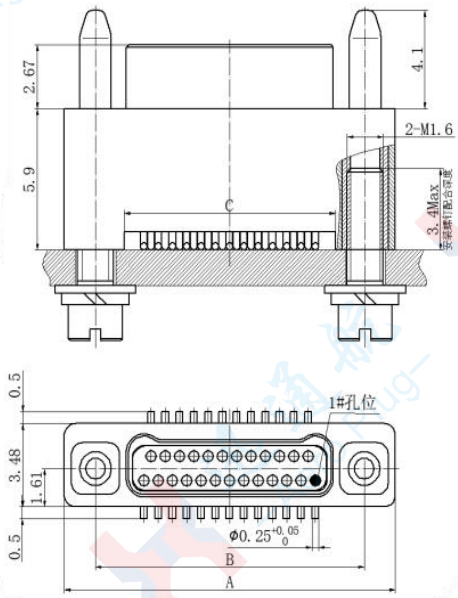

J63A-2A2-025-121-DZ

Specification and model	Size			Specification and model	Size		
	A	B	C		A	B	C
J63A-2A2-009-121-TH/DZ	9.63	6.86	4.31	J63A-2A2-037-121-TH/DZ	18.52	15.75	13.21
J63A-2A2-015-121-TH/DZ	11.53	8.76	6.22	J63A-2A2-051-121-TH/DZ	22.96	20.19	17.65
J63A-2A2-021-121-TH/DZ	13.44	10.67	8.13	J63A-2A2-065-121-TH/DZ	27.41	24.64	22.1
J63A-2A2-025-121-TH/DZ	14.71	11.94	9.4	J63A-2A2-069-121-TH/DZ	28.68	25.91	23.37
J63A-2A2-031-121-TH/DZ	16.61	13.84	11.3				

Printed circuit board package size (for reference only)

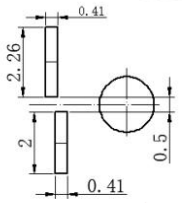

引脚封装尺寸局部放大图

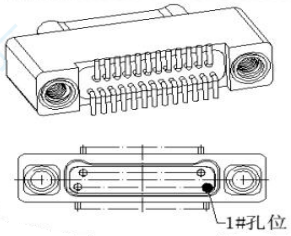

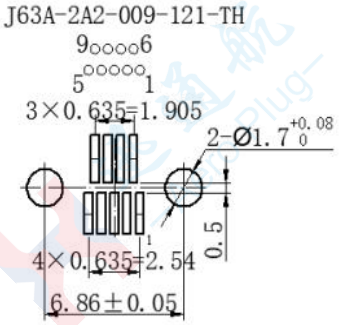

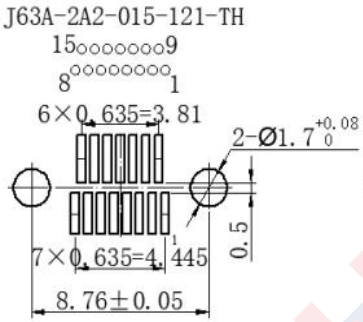

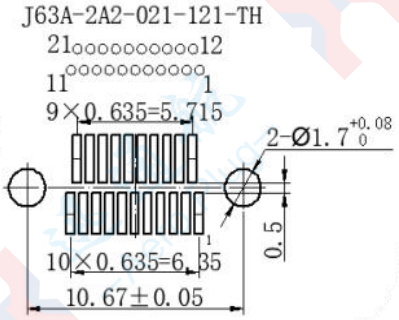

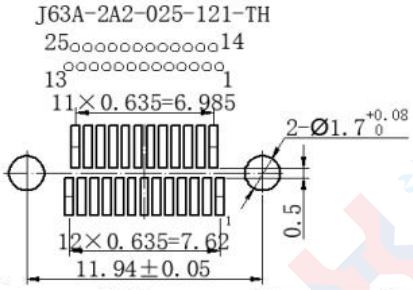

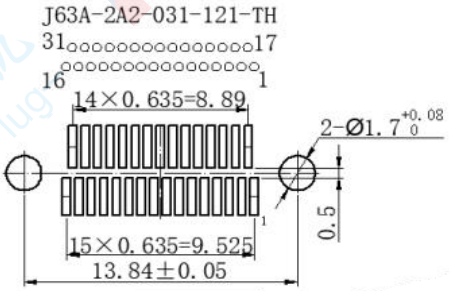

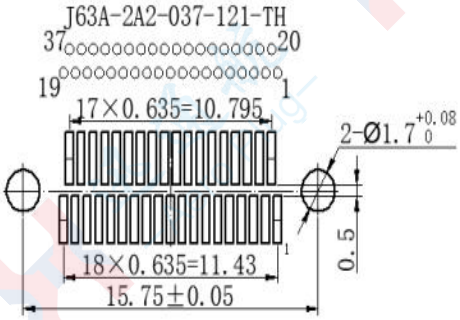

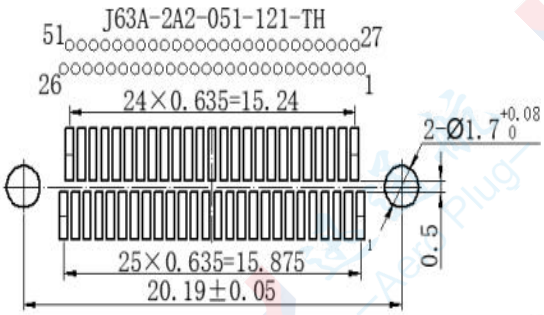

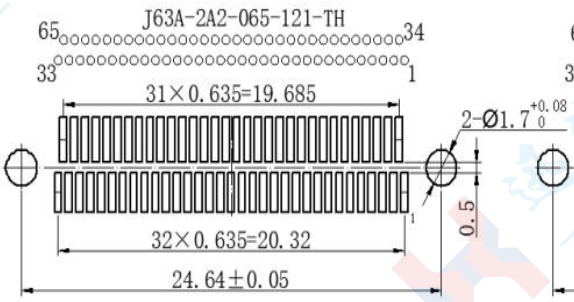

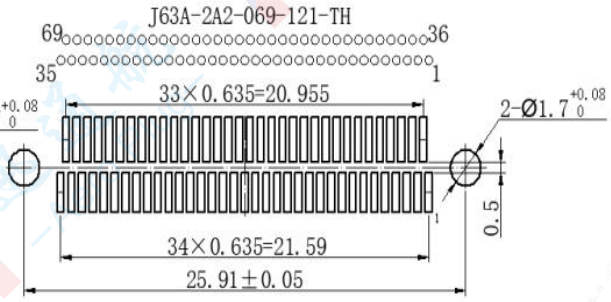

J63A vertical surface mount socket

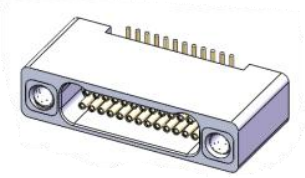

J63A-2B2-025-221-TH

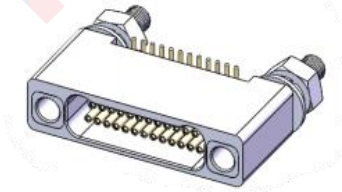

J63A-2B2-025-221-NH

J63A - 2 B 2 - 025 - 22 1 - TH/NH

- J63A: Main code name
- 2: Two rows of contact pieces
- B: Vertical surface mount socket
- 2: The aluminum shell is nickel-plated
- 025: Number of contact pieces
- 22: Vertical surface-mounted jack
- 1: Gold plating of contact pieces
- TH/NH: Connect the nut/nut installation guide sleeve

Product features:

The product is welded and used using SMT technology.

Connect J63A-2B2-025-221-TH to the plug with a locking screw. J63A-2B2-025-221-NH

Connect with the plug with a guide column;

The pins are soft and prone to deformation. They need to be protected when in use

The overall dimensions of this series:

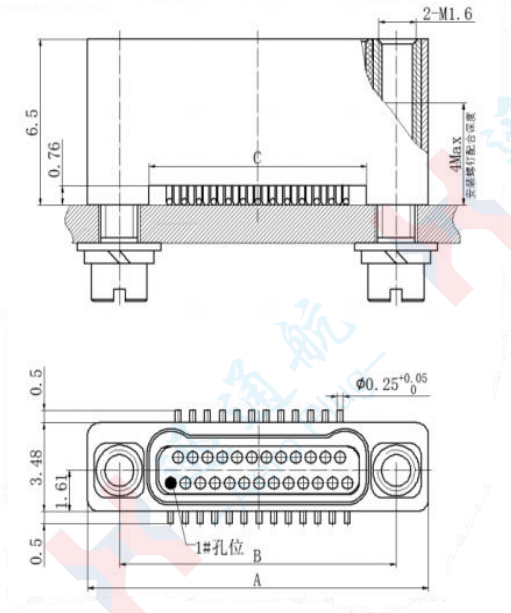

J63A-2B2-025-221-TH

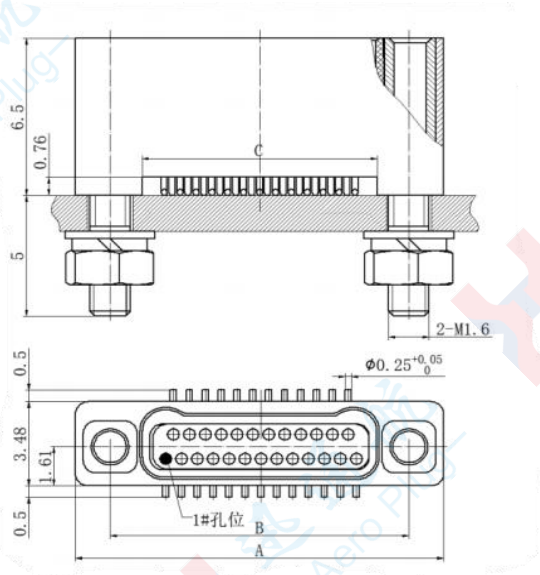

J63A-2B2-025-221-NH

Specification and model	Size			Specification and model	Size		
	A	B	C		A	B	C
J63A-2B2-009-221-TH/NH	9.63	6.86	4.31	J63A-2B2-037-221-TH/NH	18.52	15.75	13.21
J63A-2B2-015-221-TH/NH	11.53	8.76	6.22	J63A-2B2-051-221-TH/NH	22.96	20.19	17.65
J63A-2B2-021-221-TH/NH	13.44	10.67	8.13	J63A-2B2-065-221-TH/NH	27.41	24.64	22.1
J63A-2B2-025-221-TH/NH	14.71	11.94	9.4	J63A-2B2-069-221-TH/NH	28.68	25.91	23.37
J63A-2B2-031-221-TH/NH	16.61	13.84	11.3				

Printed circuit board package size (for reference only)

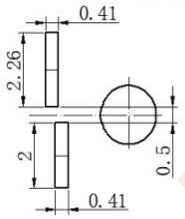

引脚封装尺寸局部放大图

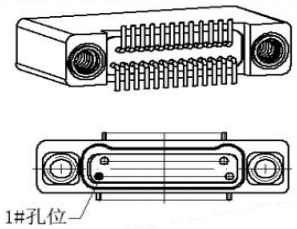

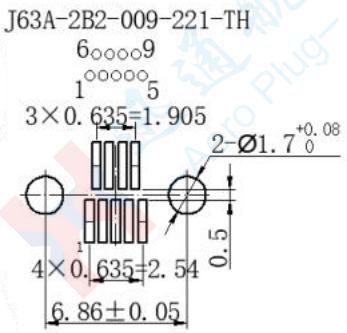

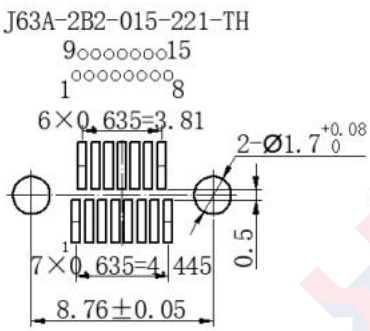

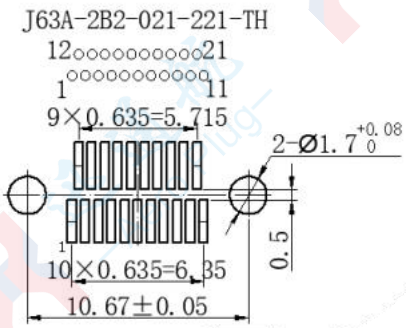

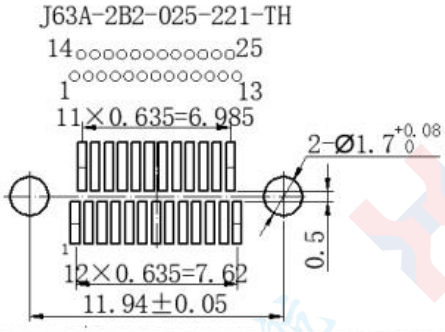

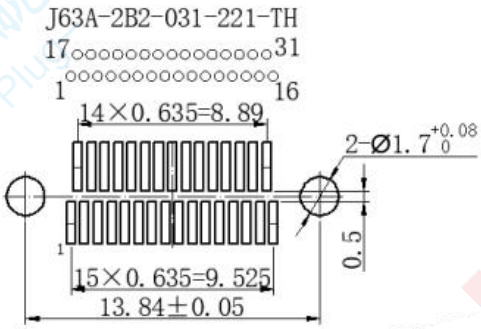

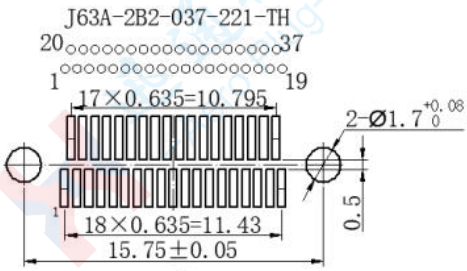

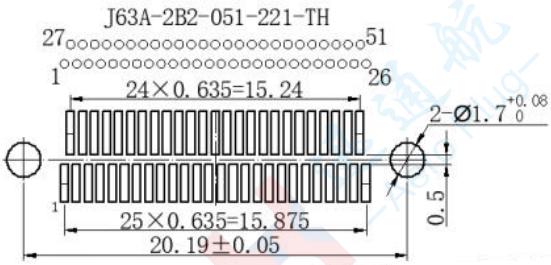

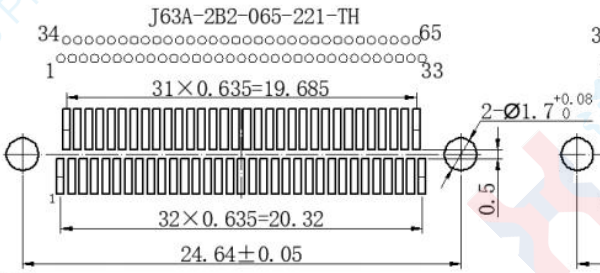

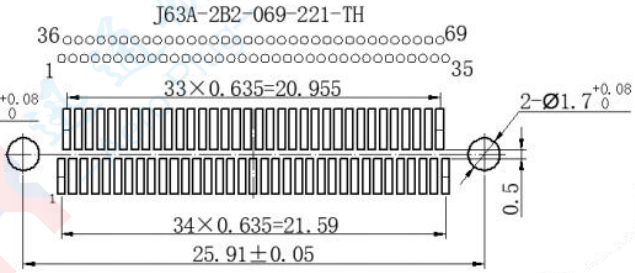

J63A vertical surface mount welding installation socket

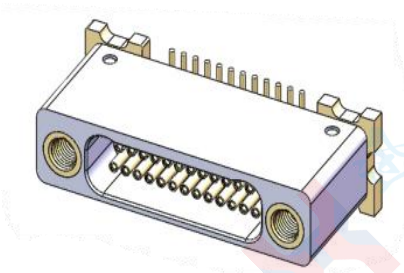

J63A-2B2-025-221-TH1

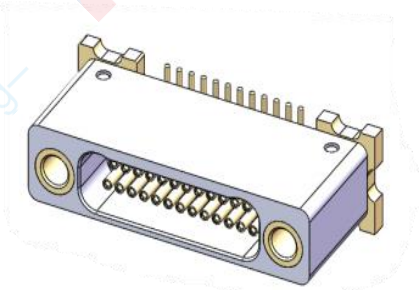

J63A-2B2-025-221-SH

J63A - 2 B 2 - 025 - 22 1 - TH1/SH

- J63A: Main code name
- 2: Two rows of contact pieces
- B: Vertical surface mount socket
- 2: The aluminum shell is nickel-plated
- 025: Number of contact pieces
- 22: Vertical surface-mounted jack
- 1: Gold plating of contact pieces
- TH1/SH: Weld the connecting nut/weld the installation guide sleeve

Product features:

The product is suitable for use on printed circuit boards where installation holes cannot be made and is welded using SMT technology.

Connect J63A-2B2-025-221-TH1 to the plug with a locking screw.

Connect J63A-2B2-025-221-SH to the plug with a guide column

The pins are soft and prone to deformation. They need to be protected when in use.

The overall dimensions of this series:

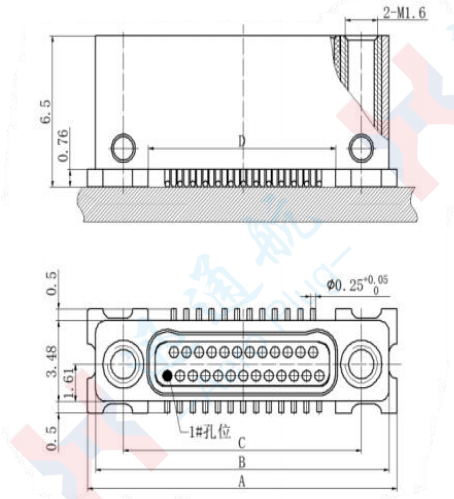

J63A-2B2-025-221-TH1

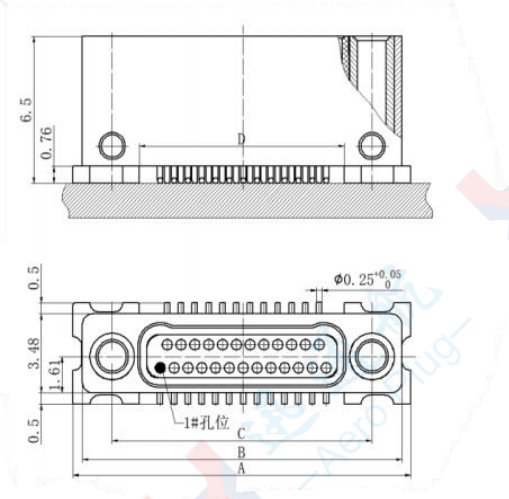

J63A-2B2-025-221-SH

Specification and model	Size				Specification and model	Size			
	A	B	C	D		A	B	C	D
J63A-2B2-009-221-TH1/SH	10.46	9.63	6.86	4.46	J63A-2B2-037-221-TH1/SH	19.35	18.52	15.75	13.35
J63A-2B2-015-221-TH1/SH	12.36	11.53	8.76	6.36	J63A-2B2-051-221-TH1/SH	23.79	22.96	20.19	17.79
J63A-2B2-021-221-TH1/SH	14.27	13.44	10.67	8.27	J63A-2B2-065-221-TH1/SH	28.24	27.41	24.64	22.24
J63A-2B2-025-221-TH1/SH	15.54	14.71	11.94	9.54	J63A-2B2-069-221-TH1/SH	29.51	28.8	25.91	23.51
J63A-2B2-031-221-TH1/SH	17.44	16.61	13.84	11.94					

Printed circuit board package size (for reference only)

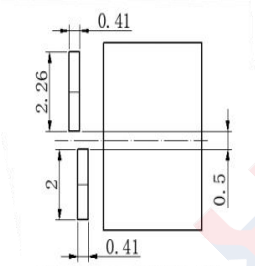

引脚封装尺寸局部放大图

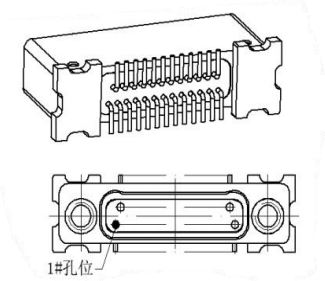

J63A-2B2-009-221-TH1

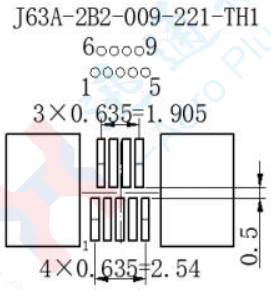

J63A-2B2-015-221-TH1

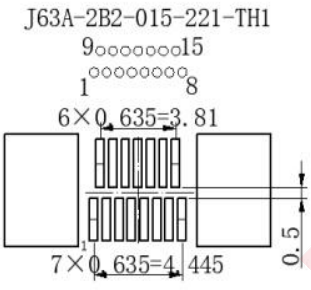

J63A-2B2-021-221-TH1

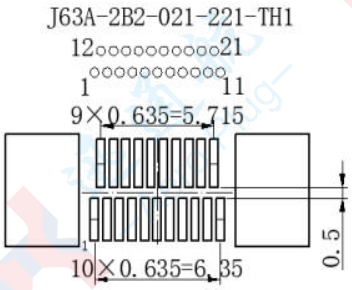

J63A-2B2-025-221-TH1

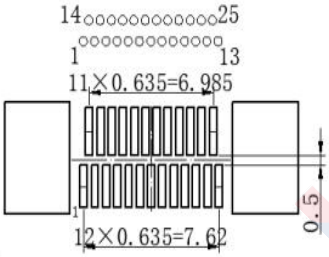

J63A-2B2-031-221-TH1

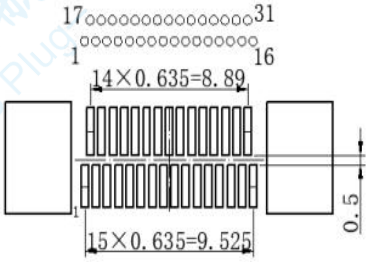

J63A-2B2-037-221-TH1

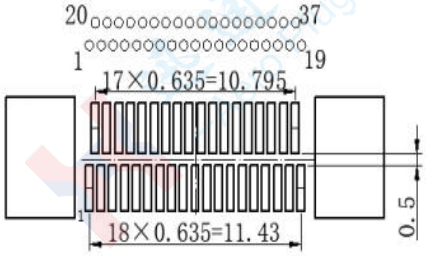

J63A-2B2-051-221-TH1

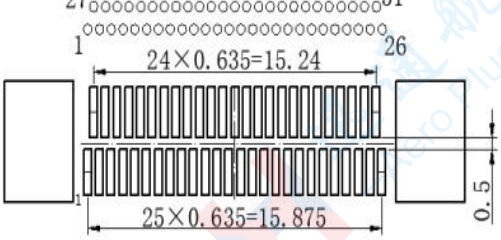

J63A-2B2-065-221-TH1

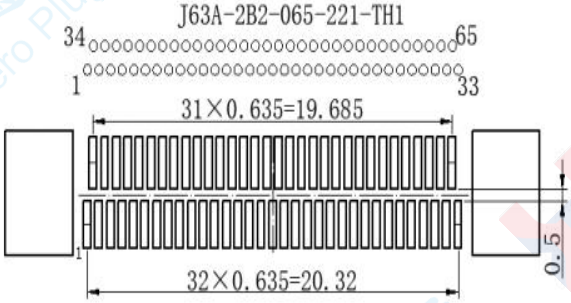

J63A-2B2-069-221-TH1

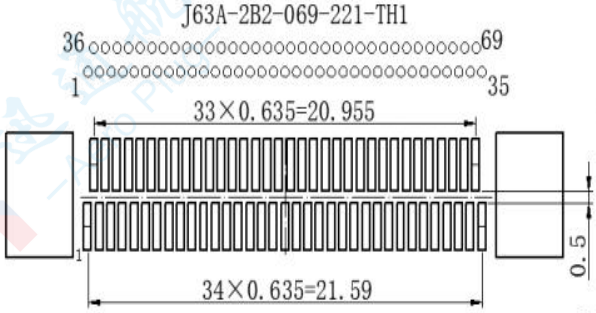

J63A horizontal surface mount plug

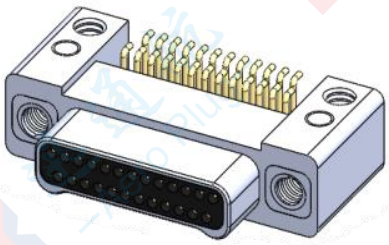

J63A - 2 C 2 - 025 - 12 1 - TH

- J63A: Main code name
- 2: Two rows of contact pieces
- C: The plug is attached to the horizontal gauge
- 2: The aluminum shell is nickel-plated
- 025: Number of contact pieces
- 12: Horizontal surface mount type pins
- 1: Gold plating of contact pieces
- TH: Connecting nut

Product features:

The product is welded and used using SMT technology.

Generally, sockets with locking screws are used for connection.

The pins are soft and prone to deformation. They need to be protected when in use.

The overall dimensions of this series:

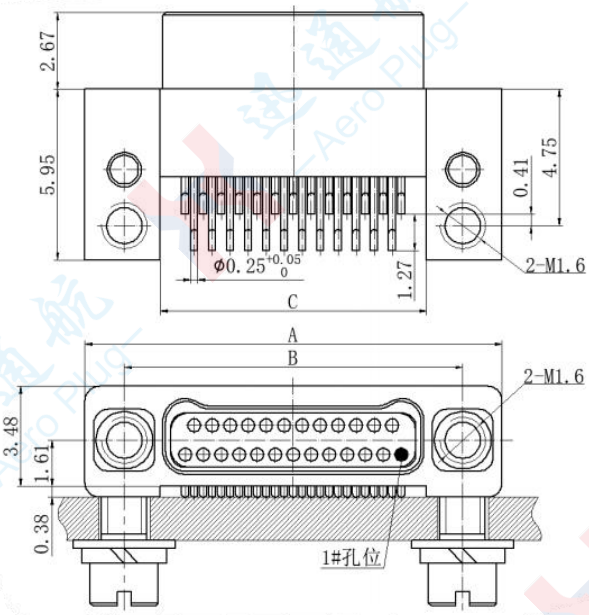

Specification and model	size			Specification and model	size		
	A	B	C		A	B	C
J63A-2C2-009-121-TH	9.63	6.86	4.31	J63A-2C2-037-121-TH	18.52	15.75	13.21
J63A-2C2-015-121-TH	11.53	8.76	6.22	J63A-2C2-051-121-TH	22.96	20.19	17.65
J63A-2C2-021-121-TH	13.44	10.67	8.13	J63A-2C2-065-121-TH	27.41	24.64	22.1
J63A-2C2-025-121-TH	14.71	11.94	9.4	J63A-2C2-069-121-TH	28.68	25.91	23.37
J63A-2C2-031-121-TH	16.61	13.84	11.3				

Printed circuit board package size
(for reference only)

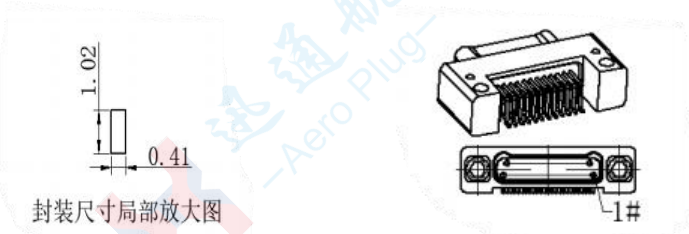

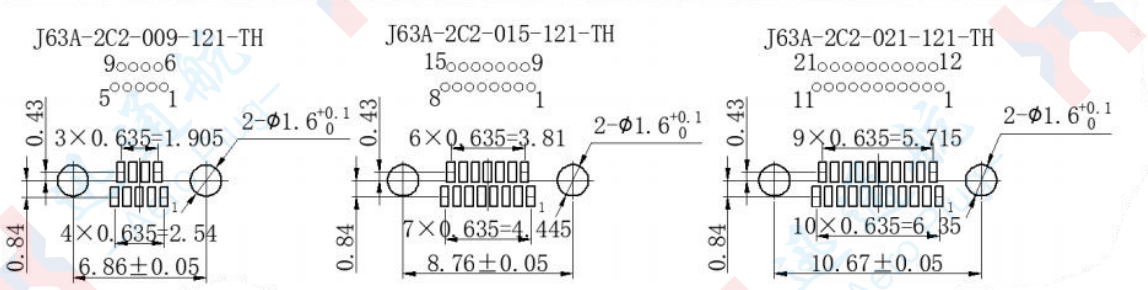

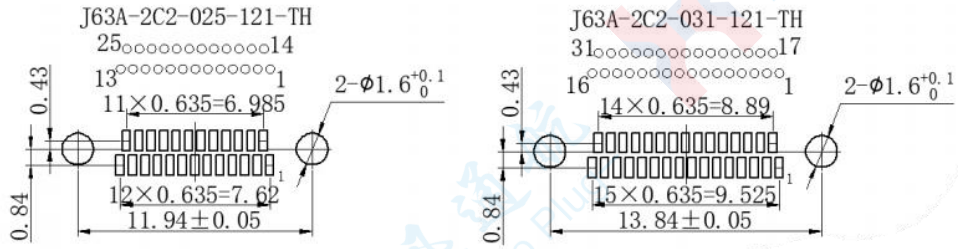

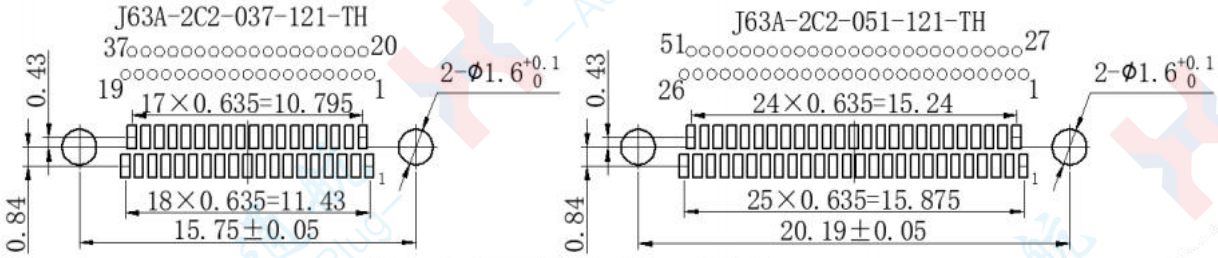

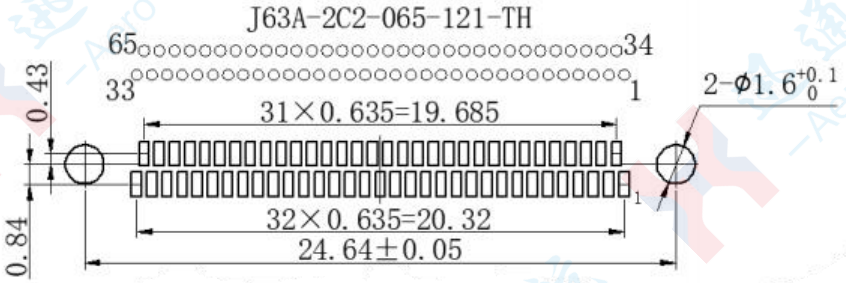

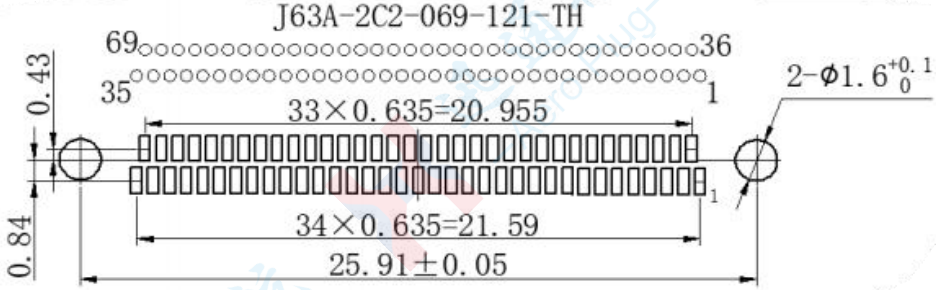

J63A horizontal surface mount socket

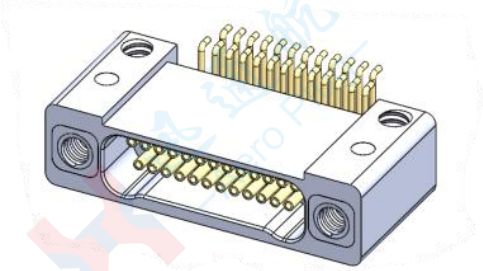

J63A - 2 D 2 - 025 - 22 1 - TH

- J63A: Main code name
- 2: Two rows of contact pieces
- D: Horizontal surface mount socket
- 2: The aluminum shell is nickel-plated
- 025: Number of contact pieces
- 22: Horizontal surface-mounted jack
- 1: Gold plating of contact pieces
- TH: Connecting nut

Product features:

The product is welded and used using SMT technology.

Generally, plugs with locking screws are used for connection.

The pins are soft and prone to deformation. They need to be protected when in use.

The overall dimensions of this series:

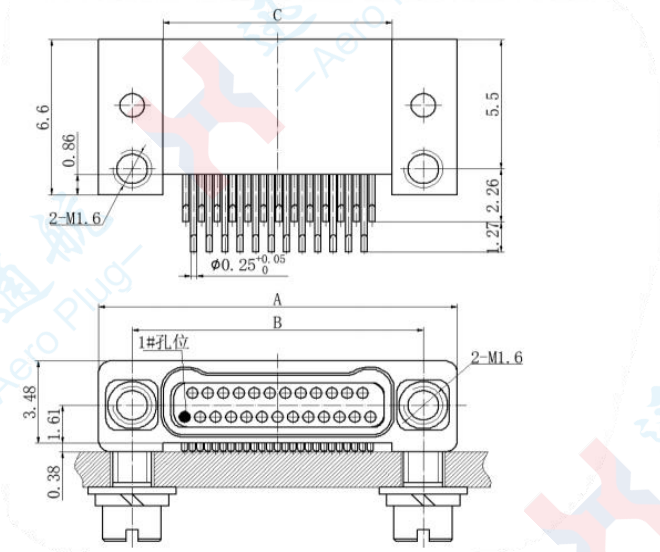

Specification and model	Size			Specification and model	Size		
	A	B	C		A	B	C
J63A-2D2-009-221-TH	9.63	6.86	4.31	J63A-2D2-037-221-TH	18.52	15.75	13.21
J63A-2D2-015-221-TH	11.53	8.76	6.22	J63A-2D2-051-221-TH	22.96	20.19	17.65
J63A-2D2-021-221-TH	13.44	10.67	8.13	J63A-2D2-065-221-TH	27.41	24.64	22.1
J63A-2D2-025-221-TH	14.71	11.94	9.4	J63A-2D2-069-221-TH	28.68	25.91	23.37
J63A-2D2-031-221-TH	16.61	13.84	11.3				

Printed circuit board package size
(for reference only.)

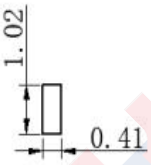

封装尺寸局部放大图

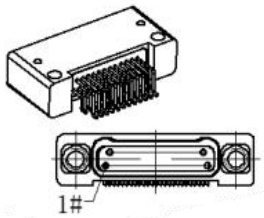

J63A-2D2-009-221-TH

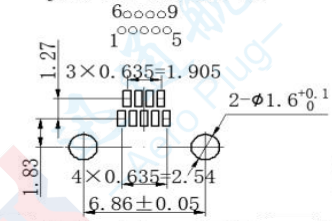

J63A-2D2-015-221-TH

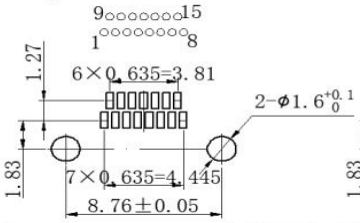

J63A-2D2-021-221-TH

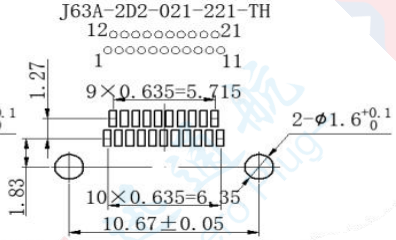

J63A-2D2-025-221-TH

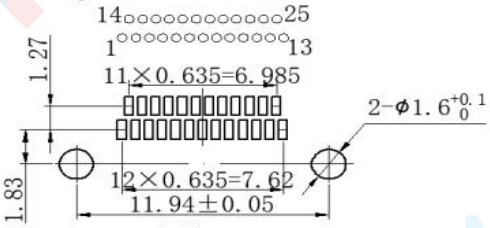

J63A-2D2-031-221-TH

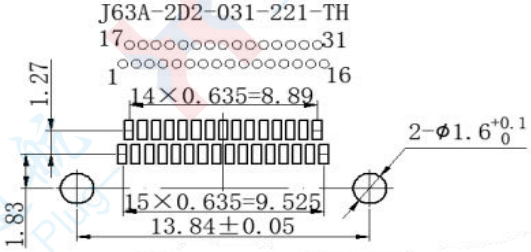

J63A-2D2-037-221-TH

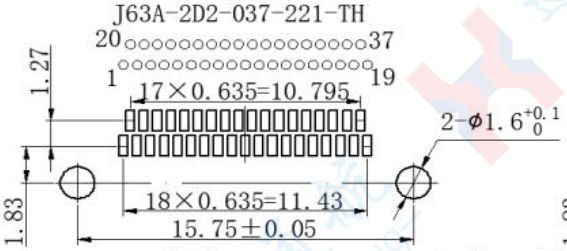

J63A-2D2-051-221-TH

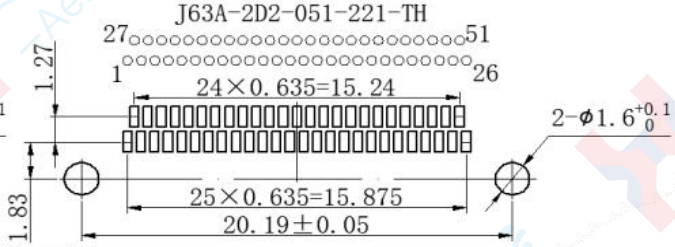

J63A-2D2-065-221-TH

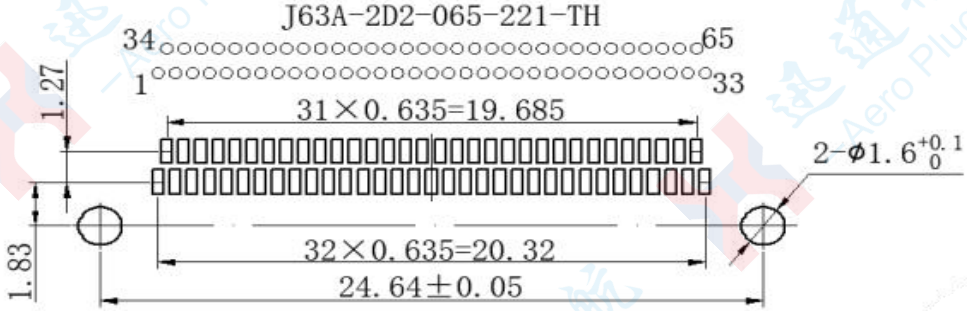

J63A-2D2-069-221-TH

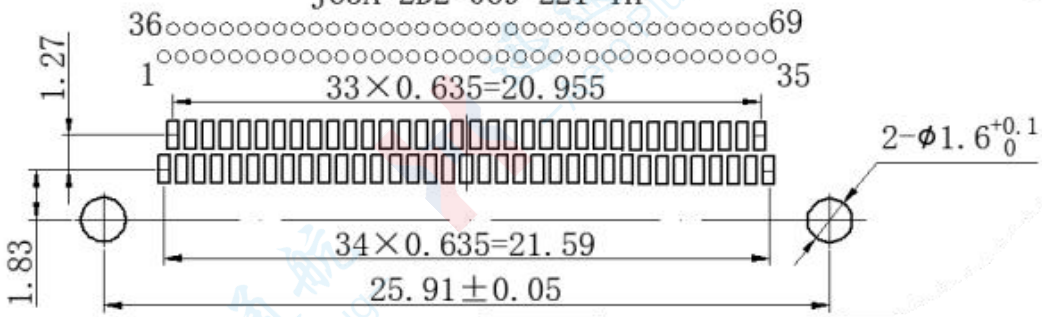

J63A curved plug-in printed circuit board plug

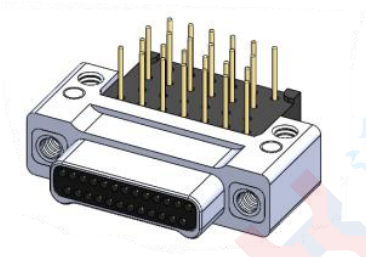

J63A-2E2-025-321-TH

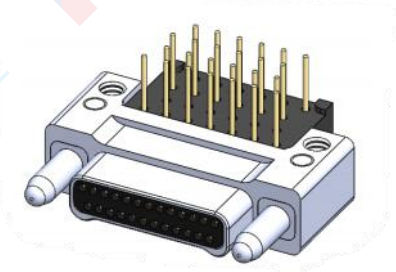

J63A-2E2-025-321-DZ

J63A - 2 E 2 - 025 - 32 1 - TH/DZ

- J63A: Main code name
- 2: Two rows of contact pieces
- E: Bend into the printed circuit board plug
- 2: The aluminum shell is nickel-plated
- 025: Number of contact pieces
- 32: Bent plug-in printed circuit board type pins: 32- Pin length 2.77; 33- Pin length 3.56; 34- Pin length 4.37
- 1: Gold plating of contact pieces
- TH/DZ: Connecting nut//guide column

Product features:

The connector offers three types of pin lengths. If other lengths are required, customization is necessary.

J63A-2E2-025-321-TH is connected to the socket with a locking screw, J63A-2E2-025-321-DZ Connect to the socket with a guide sleeve。

The overall dimensions of this series:

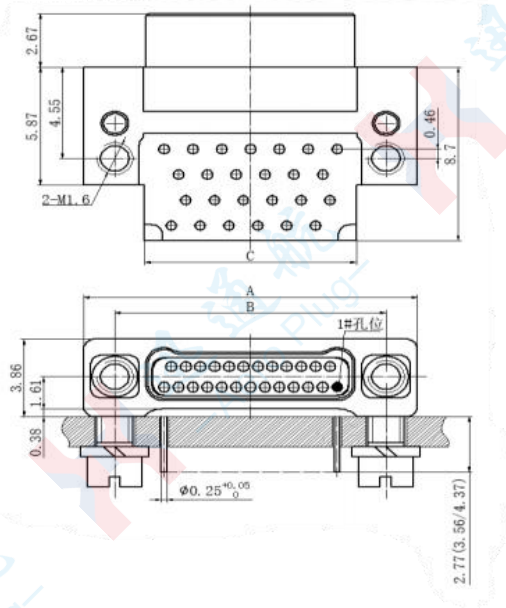

J63A-2E2-025-321-TH

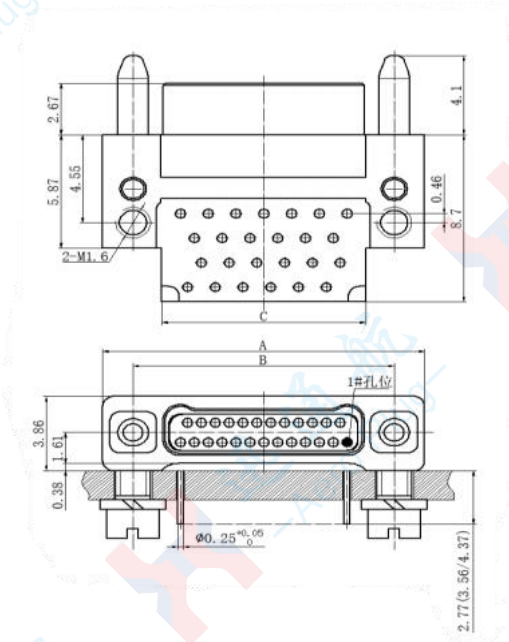

J63A-2E2-025-321-DZ

Specification and model	size			Specification and model	size		
	A	B	C		A	B	C
J63A-2E2-009-321-TH/DZ	9.63	6.86	4.25	J63A-2E2-037-321-TH/DZ	18.52	15.75	13.14
J63A-2E2-015-321-TH/DZ	11.53	8.76	6.15	J63A-2E2-051-321-TH/DZ	22.96	20.19	17.58
J63A-2E2-021-321-TH/DZ	13.44	10.67	8.06	J63A-2E2-065-321-TH/DZ	27.41	24.64	22.03
J63A-2E2-025-321-TH/DZ	14.71	11.94	9.33	J63A-2E2-069-321-TH/DZ	28.68	25.91	23.3
J63A-2E2-031-321-TH/DZ	16.61	13.84	11.23				

Printed circuit board package size (for reference only)

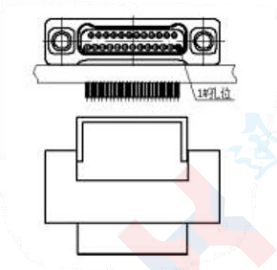

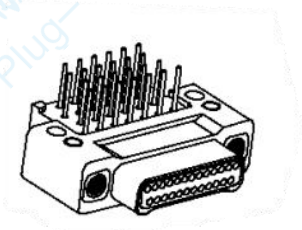

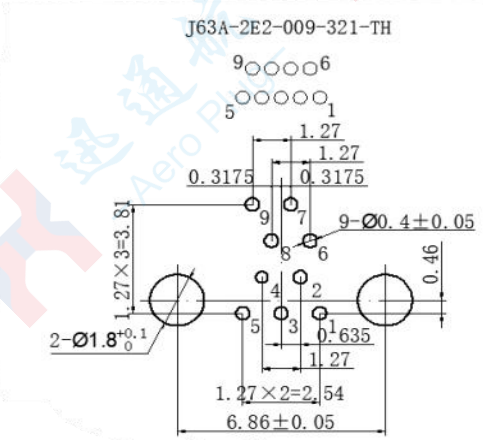

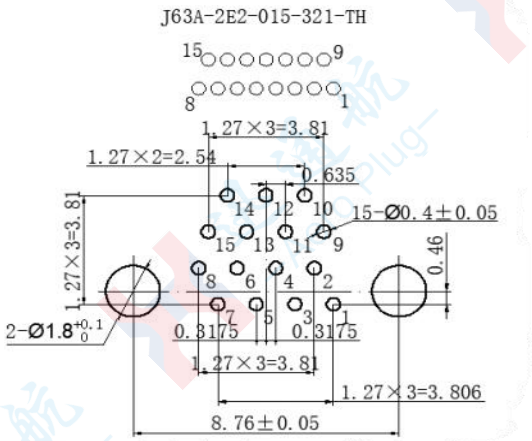

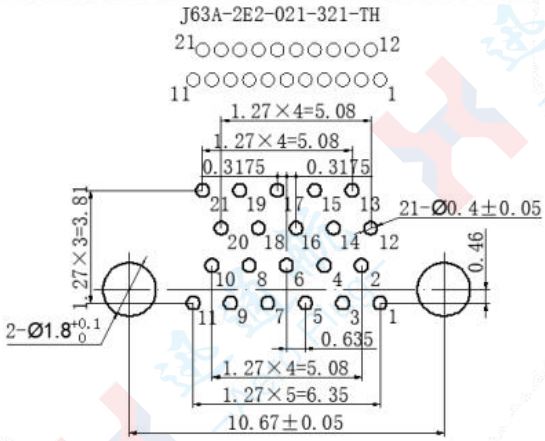

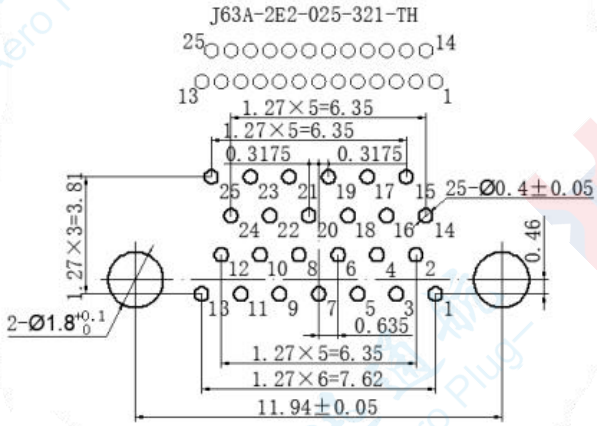

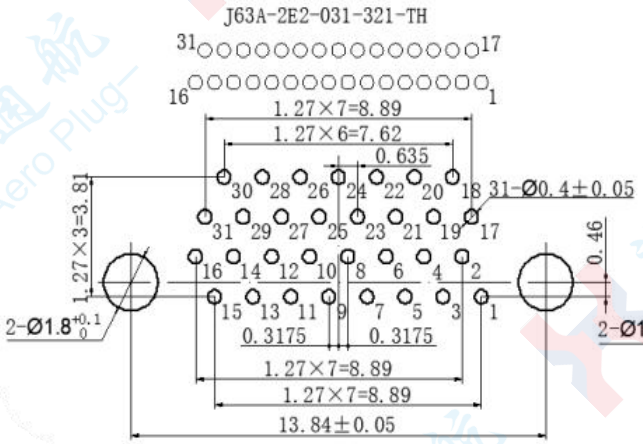

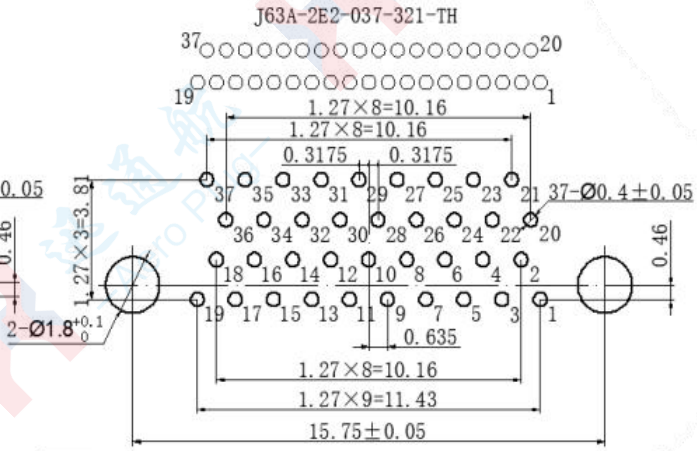

J63A-2E2-051-321-TH

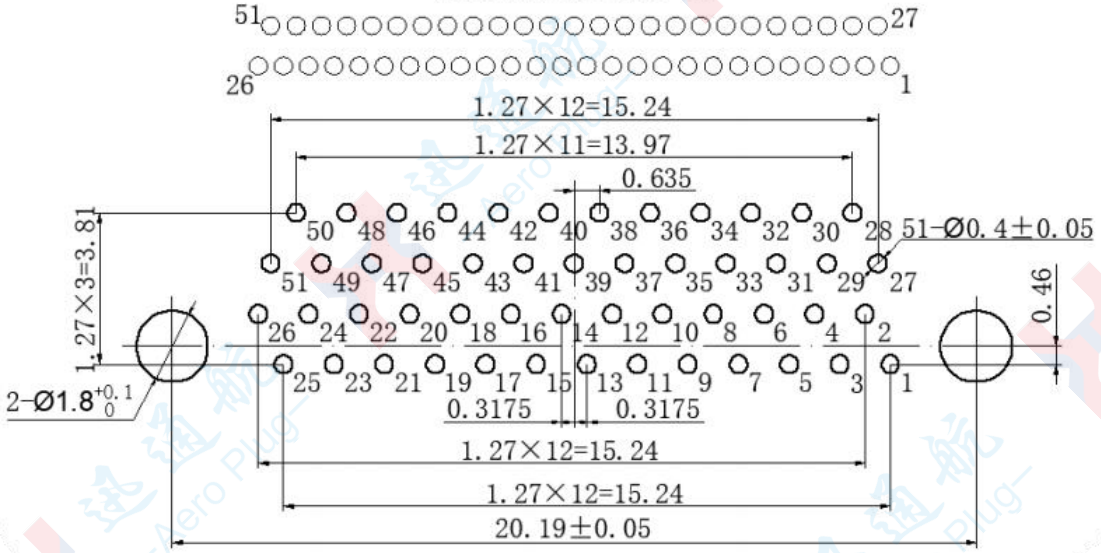

J63A-2E2-065-321-TH

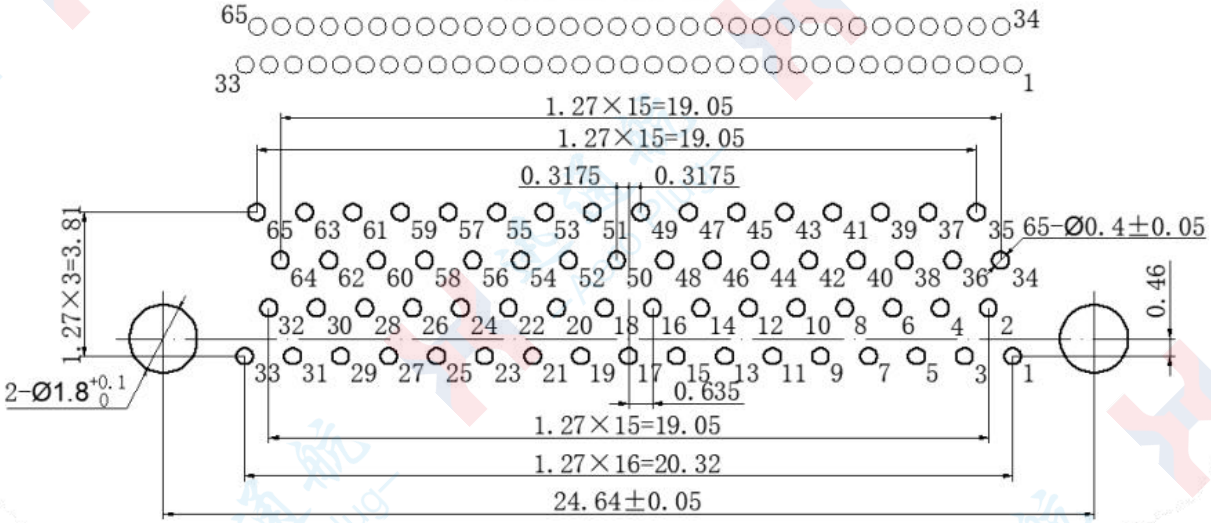

J63A-2E2-069-321-TH

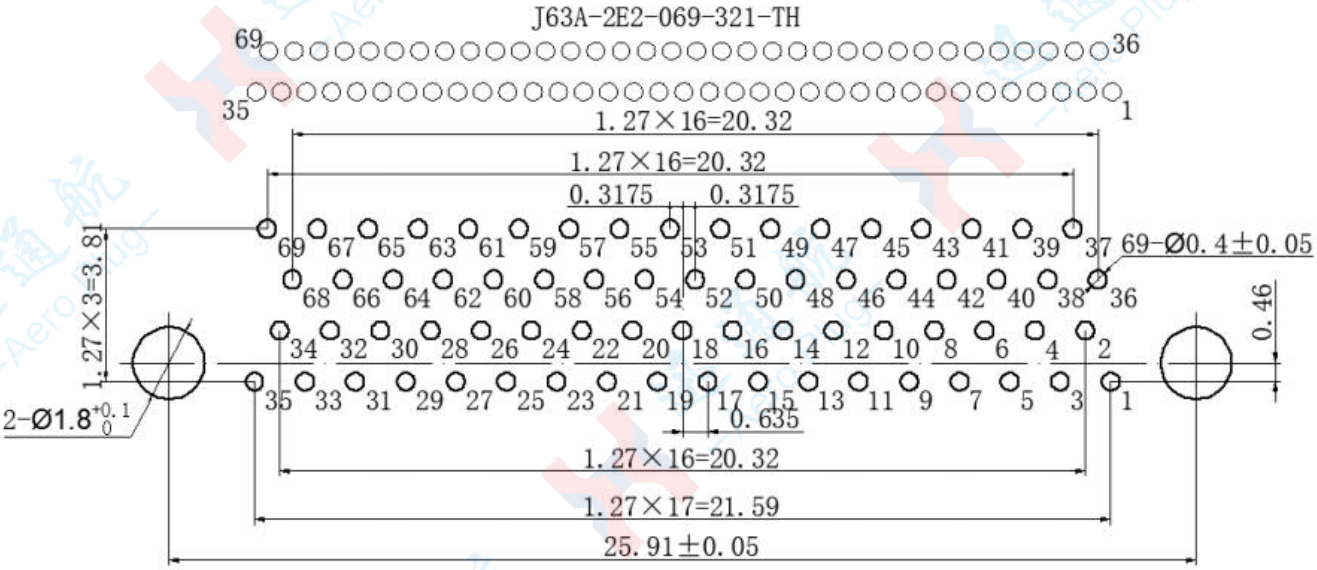

J63A is equipped with a locking screw and a bent plug for printed circuit boards

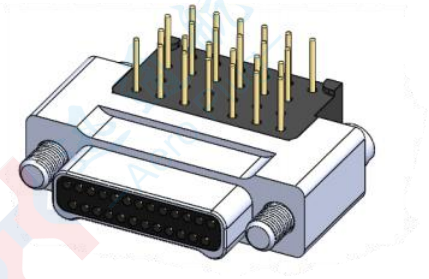

J63A - 2 E 2 - 025 - 32 1 - JC

- J63A: Main code name
- 2: Two rows of contact pieces
- E: Bend into the printed circuit board plug
- 2: The aluminum shell is nickel-plated
- 025: Number of contact pieces
- 32: Bent plug-in printed circuit board type pins: 32- Pin length 2.77; 33- Pin length 3.56; 34- Pin length 4.37
- 1: Gold plating of contact pieces
- JC: Locking screw

Product features:

The connector offers three types of pin lengths. If other lengths are required, customization is necessary.

This model is the free end and is not installed. It is generally connected to a socket with a connecting nut.

The lock screw (JC) with a flat-head slot can be tightened with a small flat-head screwdriver.

The overall dimensions of this series:

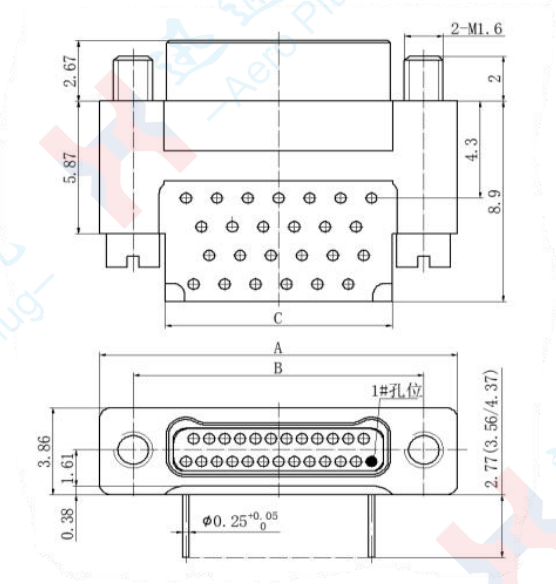

Specification and model	size			Specification and model	size		
	A	B	C		A	B	C
J63A-2E2-009-321-JC	9.63	6.86	4.25	J63A-2E2-037-321-JC	18.52	15.75	13.14
J63A-2E2-015-321-JC	11.53	8.76	6.15	J63A-2E2-051-321-JC	22.96	20.19	17.58
J63A-2E2-021-321-JC	13.44	10.67	8.06	J63A-2E2-065-321-JC	27.41	24.64	22.03
J63A-2E2-025-321-JC	14.71	11.94	9.33	J63A-2E2-069-321-JC	28.68	25.91	23.3
J63A-2E2-031-321-JC	16.61	13.84	11.23				

Printed circuit board package size (for reference only)

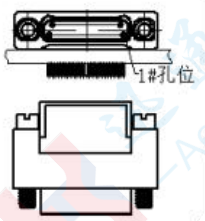

J63A-2E2-009-321-JC

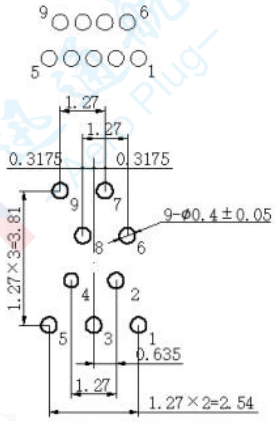

J63A-2E2-015-321-JC

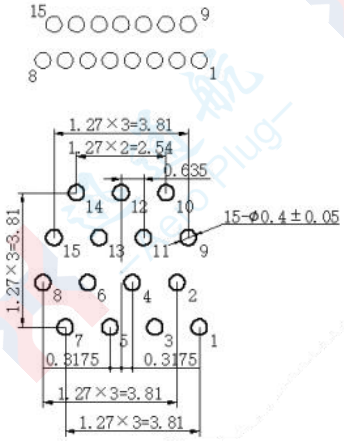

J63A-2E2-021-321-JC

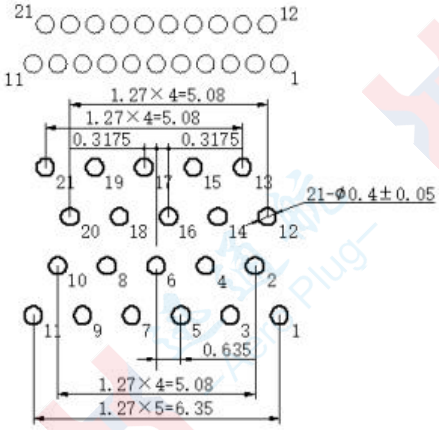

J63A-2E2-025-321-JC

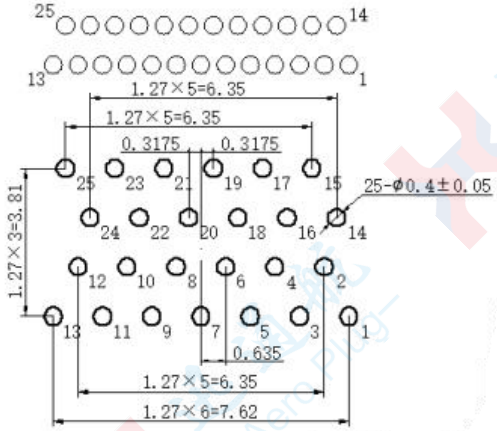

J63A-2E2-031-321-JC

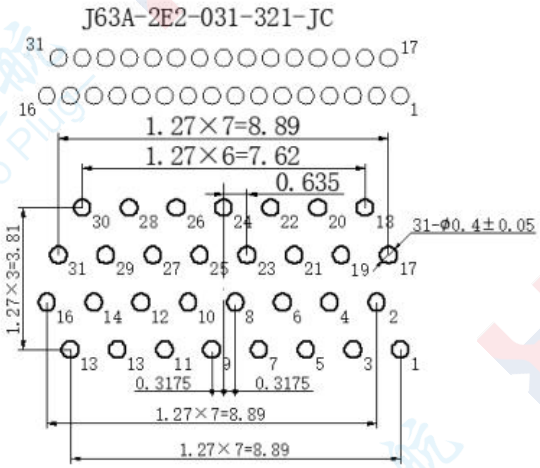

J63A-2E2-037-321-JC

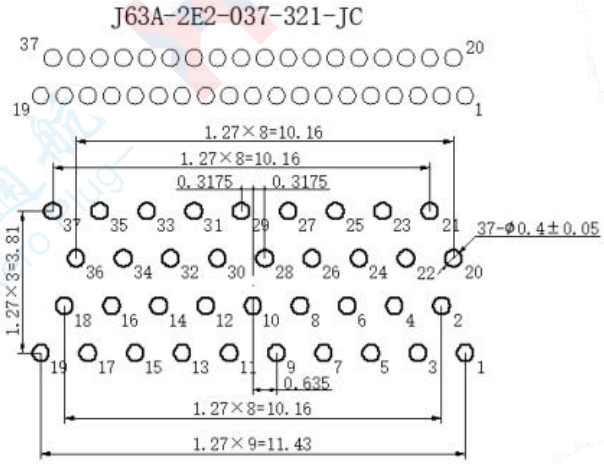

PCB Footprint Dimensions (For Reference Only)

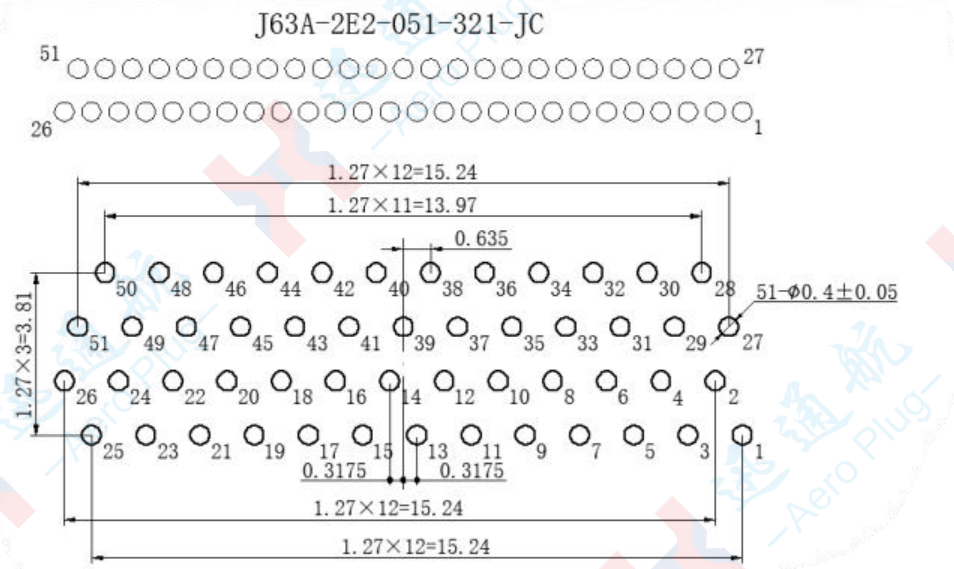

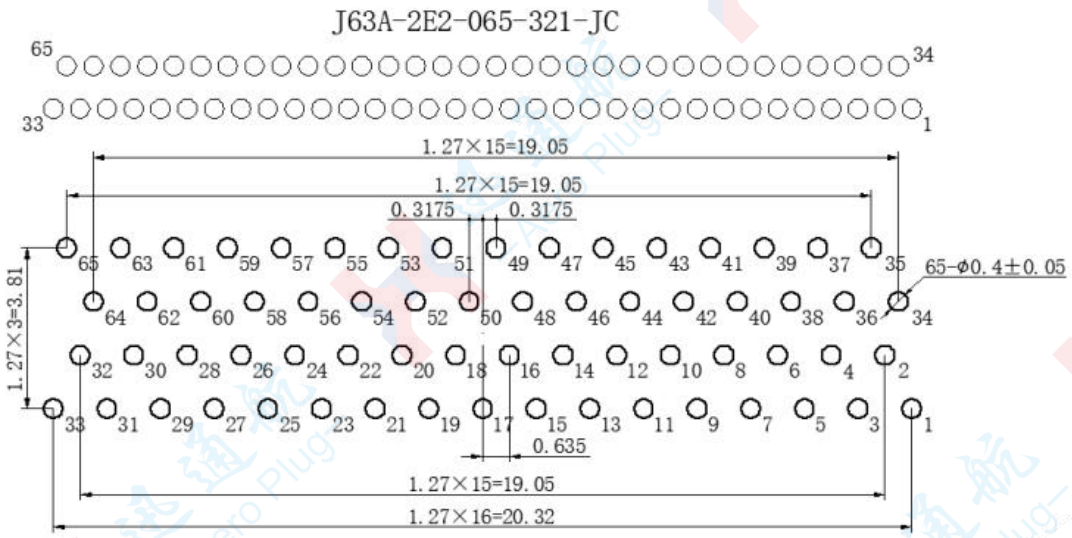

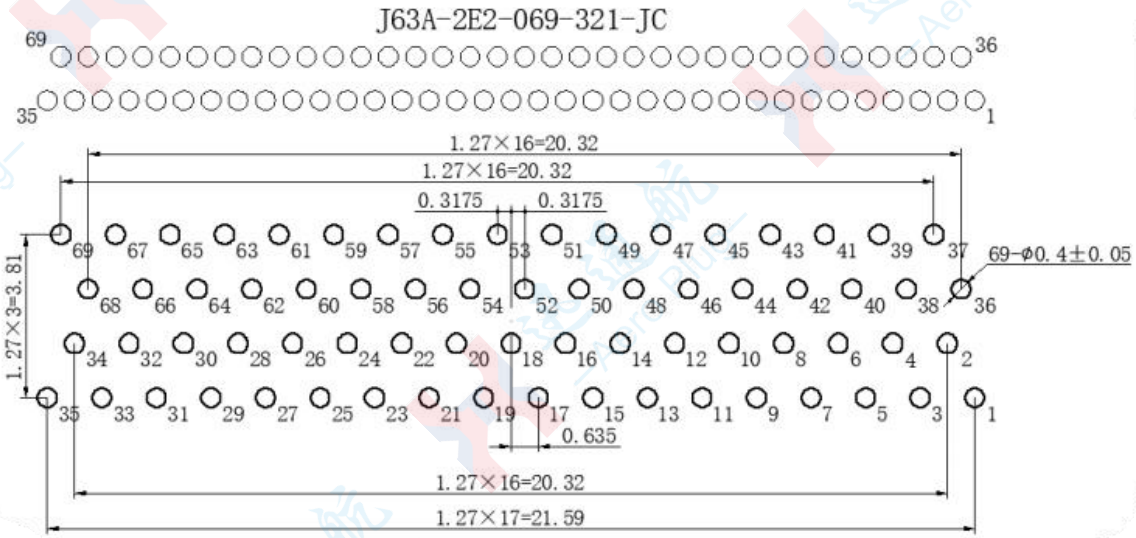

J63A curved plug-in printed circuit board socket

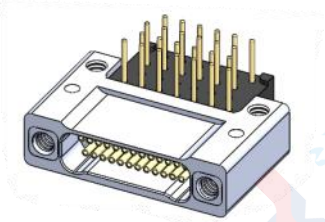

J63A-2F2-025-431-TH

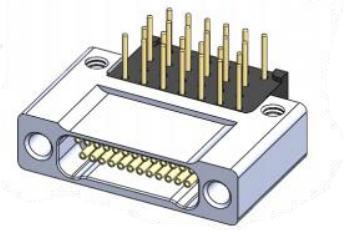

J63A-2F2-025-431-DK

J63A - 2 F 2 - 025 - 32 1 - TH/DK

- J63A: Main code name
- 2: Two rows of contact pieces
- F: Bendable printed circuit board socket
- 2: The aluminum shell is nickel-plated
- 025: Number of contact pieces
- 32: Bent plug-in printed circuit board type jack: 43- pin length 2.77; 44- Pin length 3.56; 45- Pin length 4.37
- 1: Gold plating of contact pieces
- TH/DK: Connecting nut/guide hole

Product features:

The connector offers three types of pin lengths. If other lengths are required, customization is necessary.

Connect J63A-2F2-025-431-TH to the plug with a locking screw, J63A-2F2-025-431-DK

Connect to the plug with a guide column.

The external dimensions of this series:

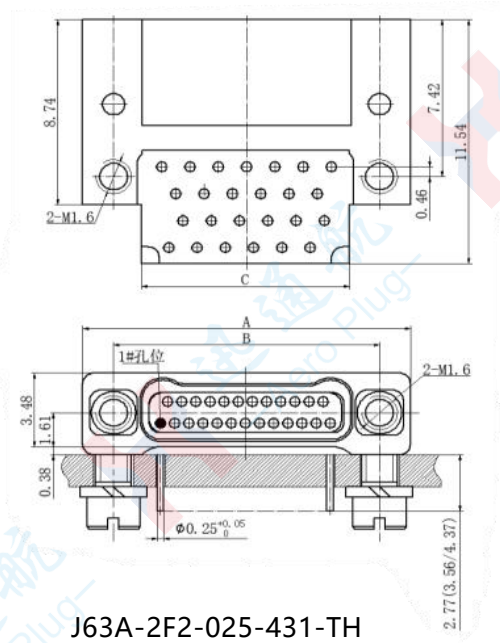

J63A-2F2-025-431-TH

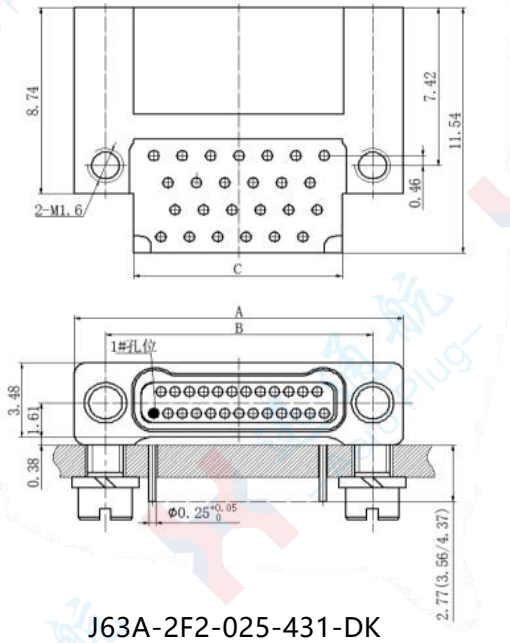

J63A-2F2-025-431-DK

Specification and model	size			Specification and model	size		
	A	B	C		A	B	C
J63A-2F2-009-431-TH/DK	9.63	6.86	4.25	J63A-2F2-037-431-TH/DK	18.52	15.75	13.14
J63A-2F2-015-431-TH/DK	11.53	8.76	6.15	J63A-2F2-051-431-TH/DK	22.96	20.19	17.58
J63A-2F2-021-431-TH/DK	13.44	10.67	8.06	J63A-2F2-065-431-TH/DK	27.41	24.64	22.03
J63A-2F2-025-431-TH/DK	14.71	11.94	9.33	J63A-2F2-069-431-TH/DK	28.68	25.91	23.3
J63A-2F2-031-431-TH/DK	16.61	13.84	11.23				

Printed circuit board package size (for reference only)

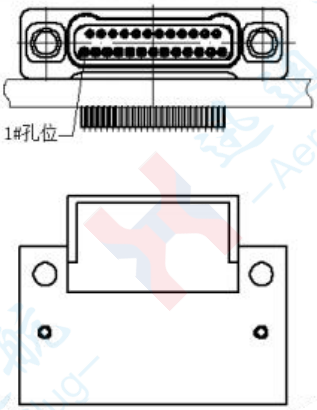

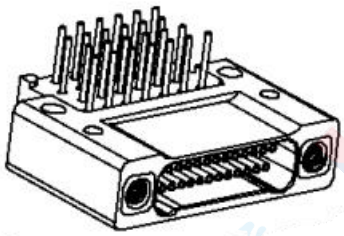

J63A-2F2-009-431-TH

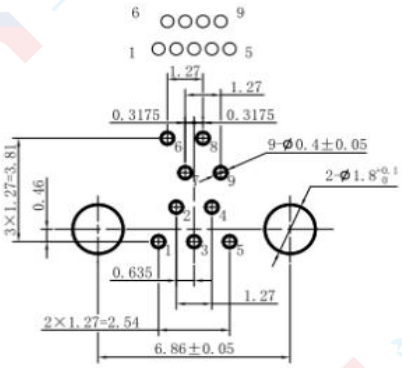

J63A-2F2-015-431-TH

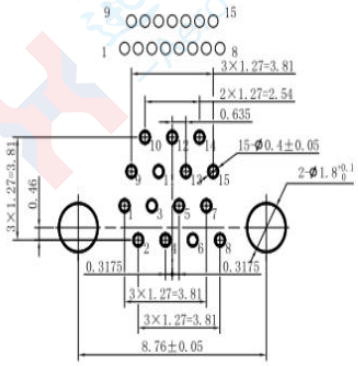

J63A-2F2-021-431-TH

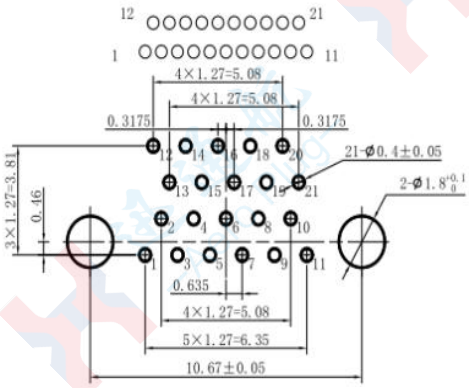

J63A-2F2-025-431-TH

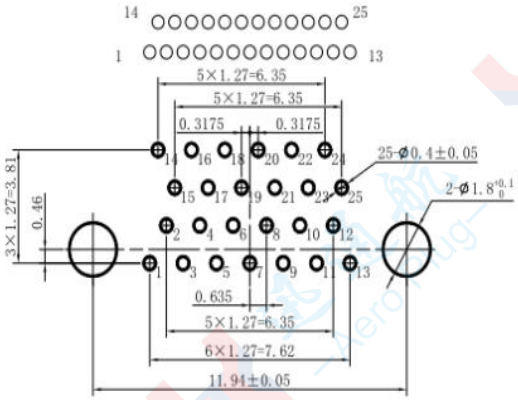

J63A-2F2-031-431-TH

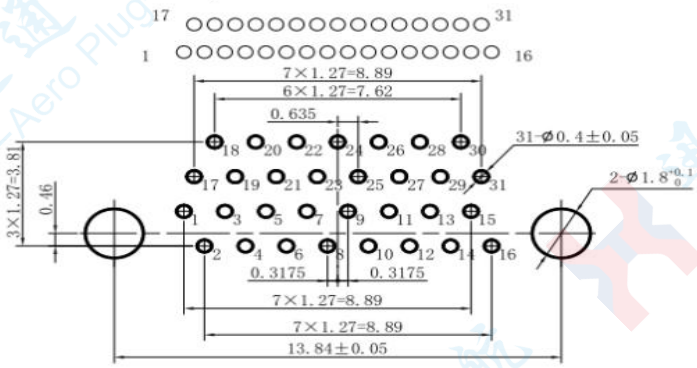

J63A-2F2-037-431-TH

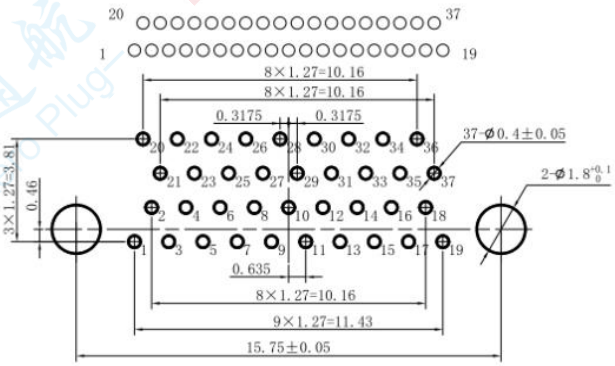

Printed circuit board package size (for reference only)

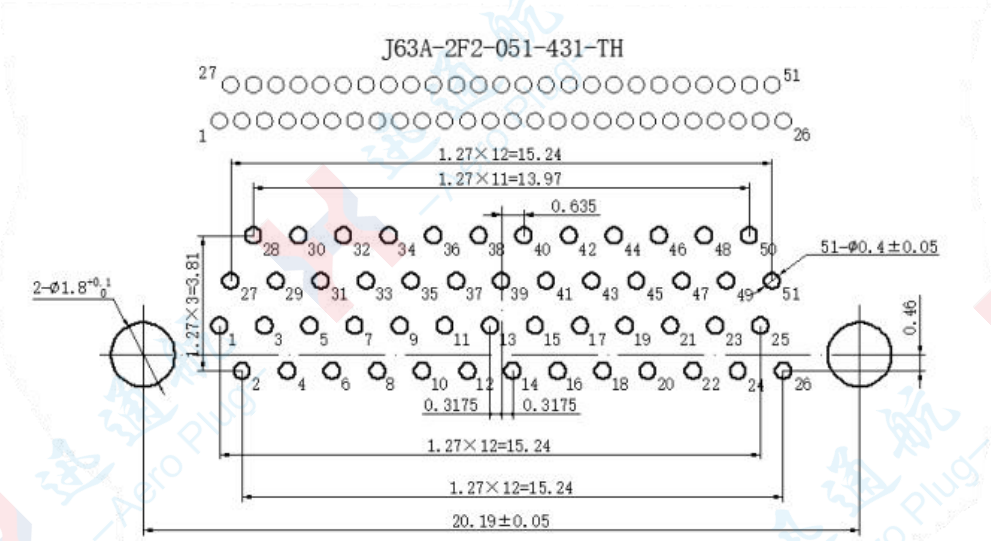

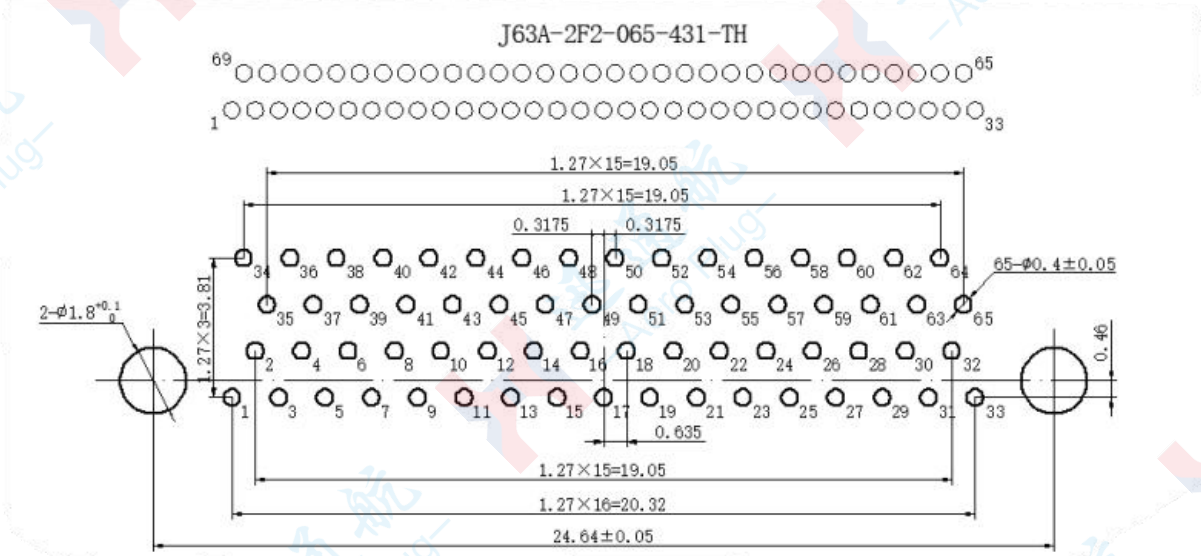

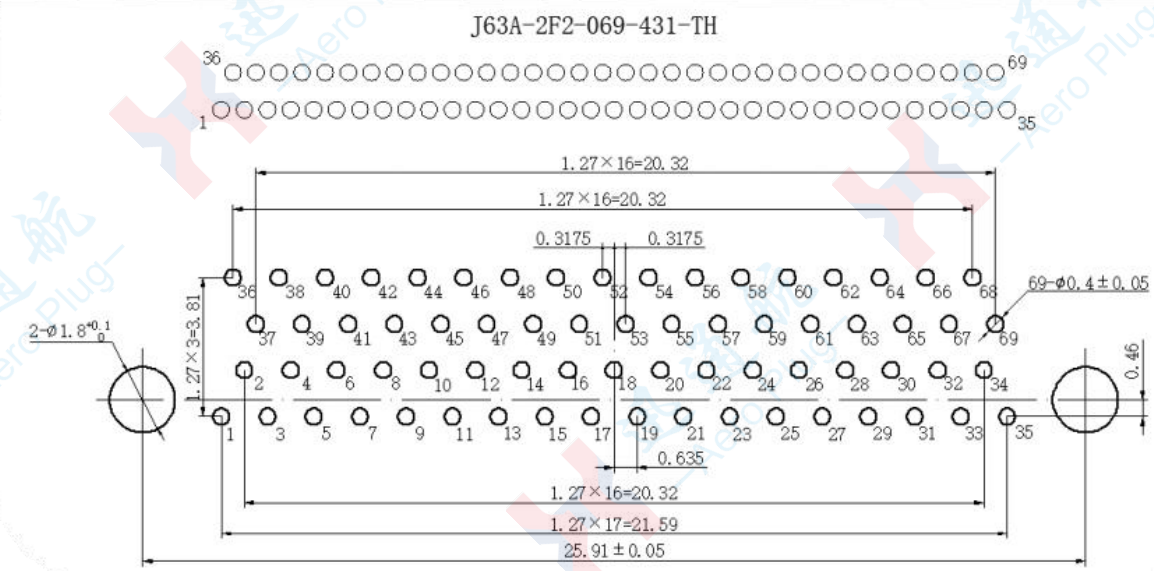

J63A through-hole printed circuit board plug

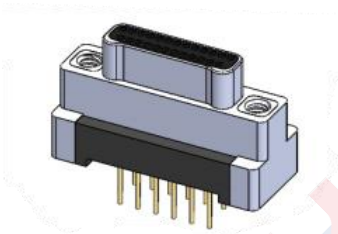

J63A-2G2-025-131-TH

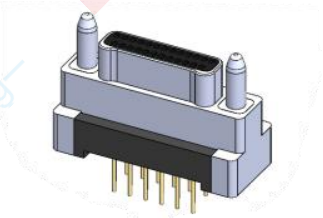

J63A-2G2-025-131-DZ

J63A - 2 G 2 - 025 - 13 1 - TH/DZ

- J63A: Main code name
- 2: Two rows of contact pieces
- G: Through-hole printed circuit board plug
- 2: The aluminum shell is nickel-plated
- 025: Number of contact pieces
- 13: Through-hole printed circuit board type pins: 13- Pin length 2.77; 14- Pin length 3.56; 15- Pin length 4.37
- 1: Gold plating of contact pieces
- TH/DZ: Connecting nut/guide column

Product features:

The connector offers three types of pin lengths. If other lengths are required, customization is necessary.

J63A-2G2-025-131-TH is connected to the socket with a locking screw, J63A-2G2-025-131-DK

Connect to the socket with a guide sleeve.

The overall dimensions of this series:

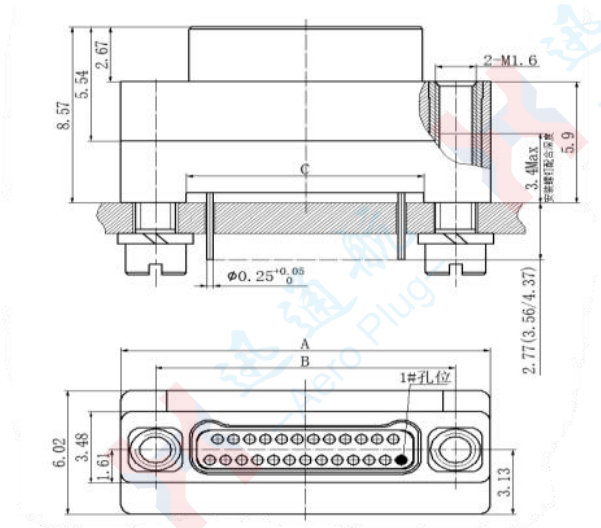

J63A-2G2-025-131-TH

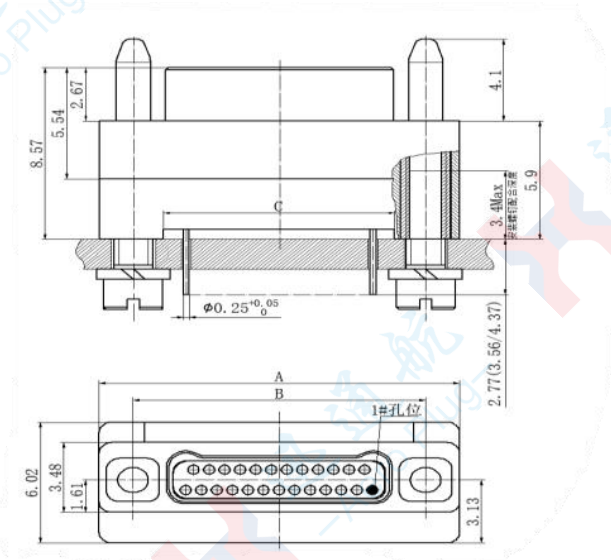

J63A-2G2-025-131-DZ

Specification and model	size			Specification and model	size		
	A	B	C		A	B	C
J63A-2G2-009-131-TH/DZ	9.63	6.86	4.31	J63A-2G2-037-131-TH/DZ	18.52	15.75	13.21
J63A-2G2-015-131-TH/DZ	11.53	8.76	6.22	J63A-2G2-051-131-TH/DZ	22.96	20.19	17.65
J63A-2G2-021-131-TH/DZ	13.44	10.67	8.13	J63A-2G2-065-131-TH/DZ	27.41	24.64	22.1
J63A-2G2-025-131-TH/DZ	14.71	11.94	9.4	J63A-2G2-069-131-TH/DZ	28.68	25.91	23.37
J63A-2G2-031-131-TH/DZ	16.61	13.84	11.3				

Printed circuit board package size (for reference only)

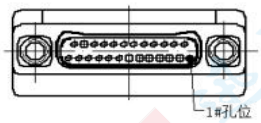

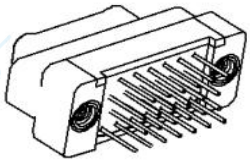

J63A-2G2-009-131-TH

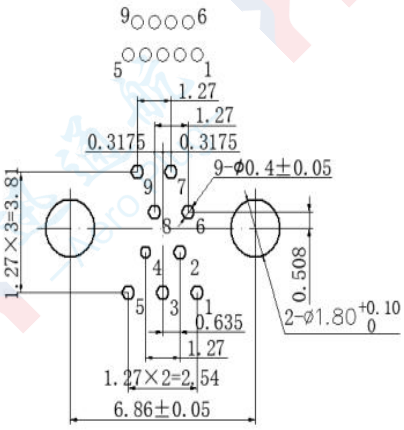

J63A-2G2-015-131-TH

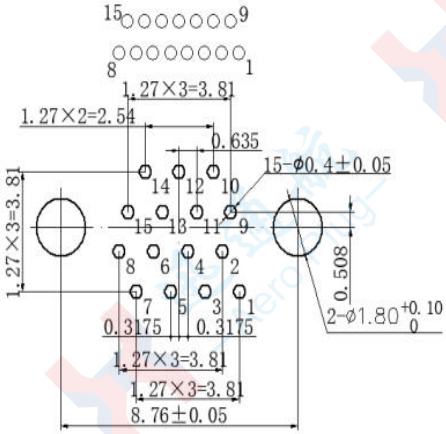

J63A-2G2-021-131-TH

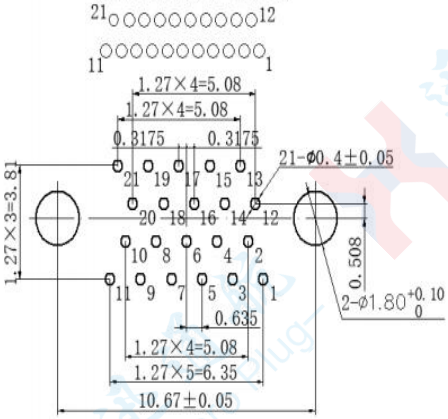

J63A-2G2-025-131-TH

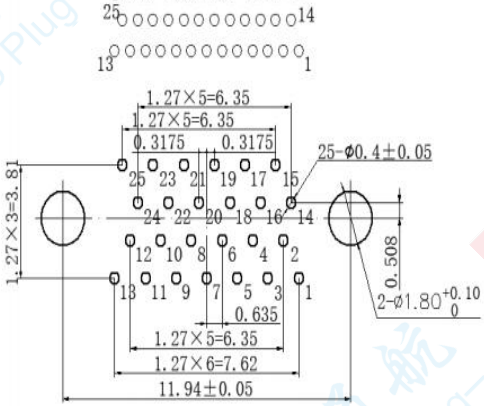

J63A-2G2-031-131-TH

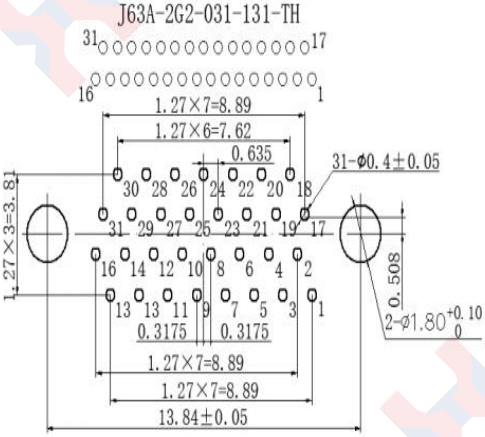

J63A-2G2-037-131-TH

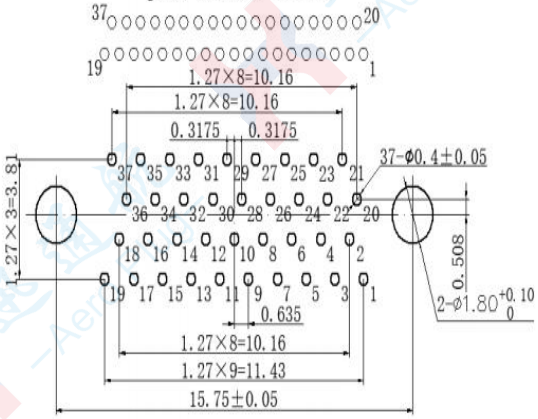

Printed circuit board package size (for reference only)

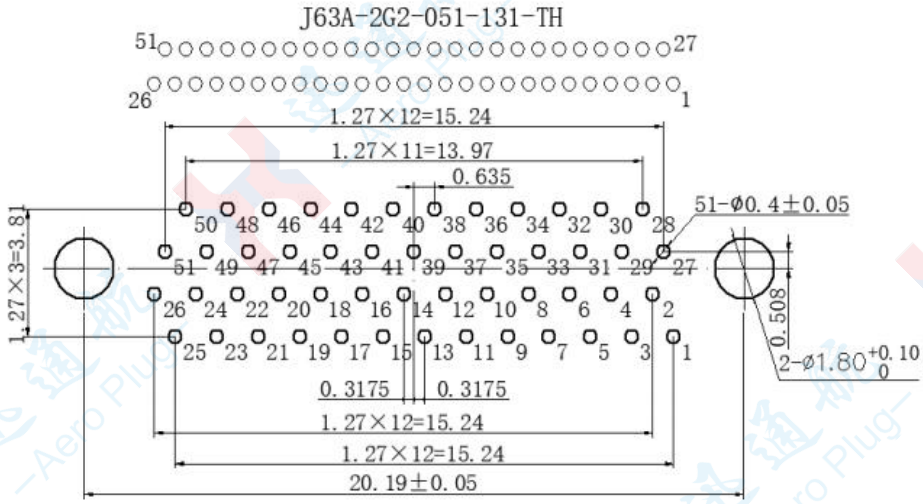

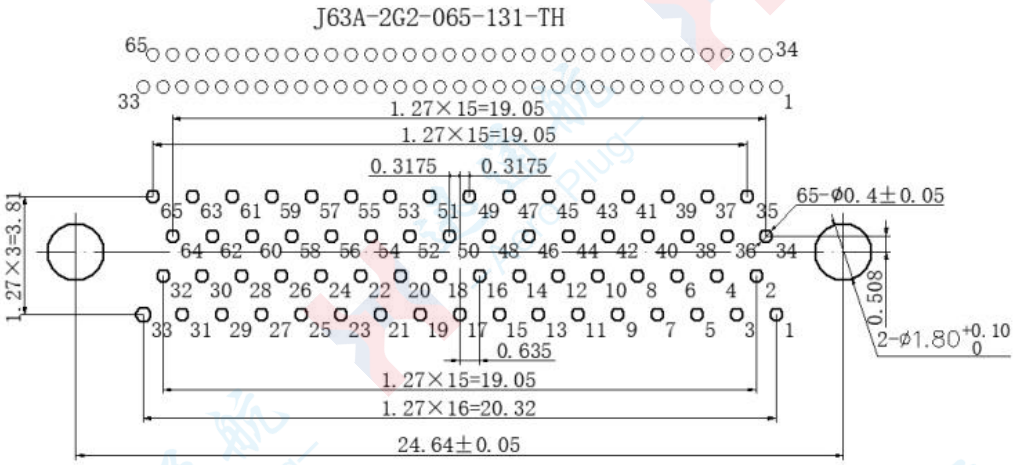

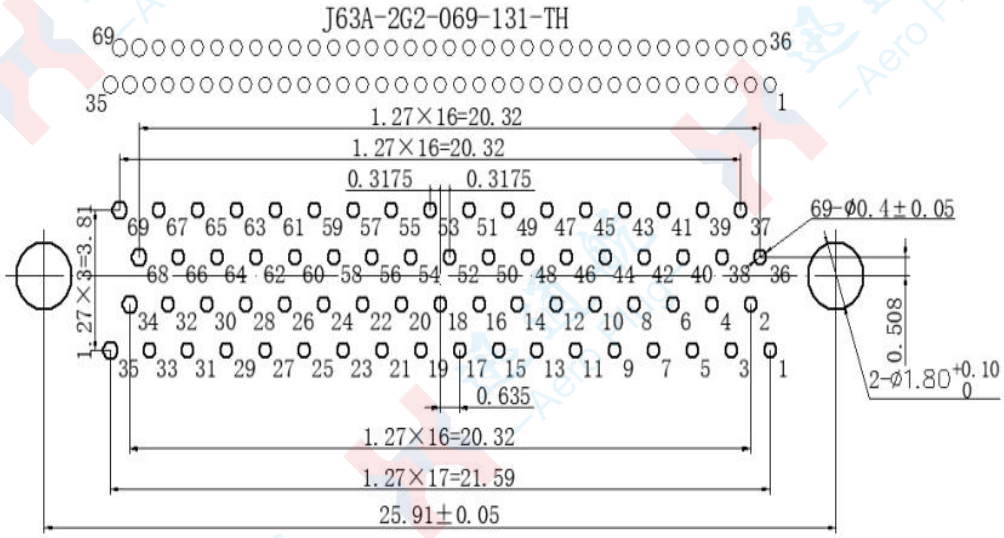

J63A through-hole printed circuit board socket

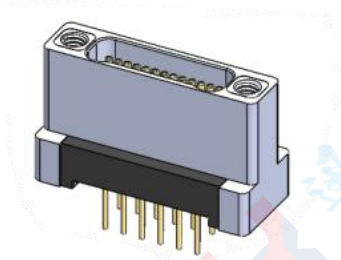

J63A-2H2-025-231-TH

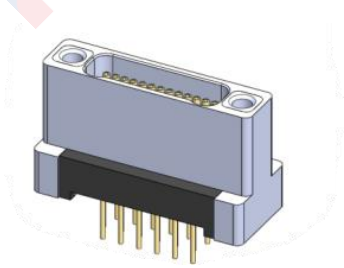

J63A-2H2-025-231-DK

J63A - 2 H 2 - 025 - 23 1 - TH/DK

- J63A: Main code name
- 2: Two rows of contact pieces
- H: Through-hole printed circuit board socket
- 2: The aluminum shell is nickel-plated
- 025: Number of contact pieces
- 23: Through-hole printed circuit board type jack: 23- Pin length 2.77; Pin length 24- 3.56; Pin length 25- 4.37
- 1: Gold plating of contact pieces
- TH/DK: Connecting nut/guide hole

Product features:

The connector offers three types of pin lengths. If other lengths are required, customization is necessary.

Connect J63A-2H2-025-231-TH to the plug with a locking screw, J63A-2H2-025-231-DK

Connect to the plug with a guide column.。

Series external dimensions:

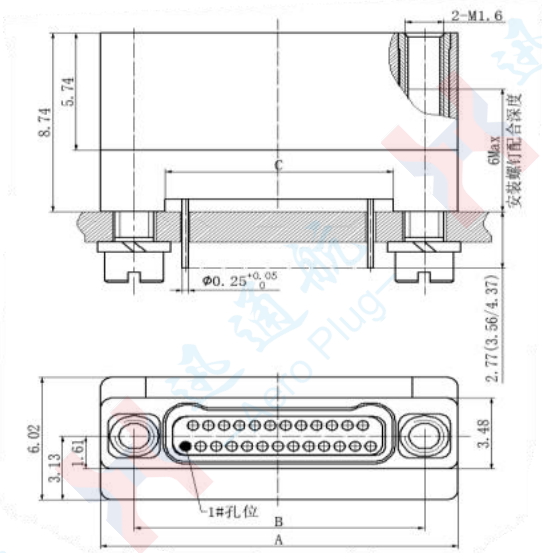

J63A-2H2-025-231-TH

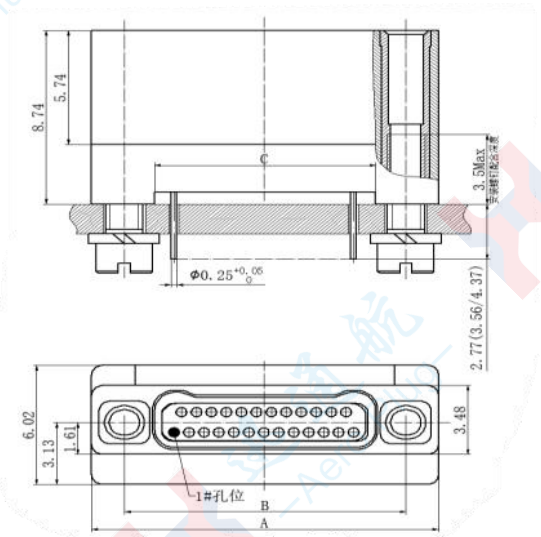

J63A-2H2-025-231-DK

Specification and model	size			Specification and model	size		
	A	B	C		A	B	C
J63A-2H2-009-231-TH/DZ	9.63	6.86	4.31	J63A-2H2-037-231-TH/DZ	18.52	15.75	13.21
J63A-2H2-015-231-TH/DZ	11.53	8.76	6.22	J63A-2H2-051-231-TH/DZ	22.96	20.19	17.65
J63A-2H2-021-231-TH/DZ	13.44	10.67	8.13	J63A-2H2-065-231-TH/DZ	27.41	24.64	22.1
J63A-2H2-025-231-TH/DZ	14.71	11.94	9.4	J63A-2H2-069-231-TH/DZ	28.68	25.91	23.37
J63A-2H2-031-231-TH/DZ	16.61	13.84	11.3				

Printed circuit board package size
(for reference only)

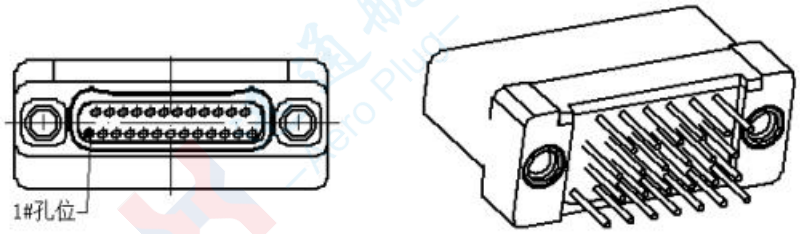

J63A-2H2-009-231-TH

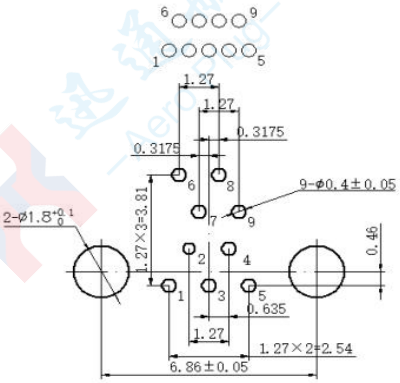

J63A-2H2-015-231-TH

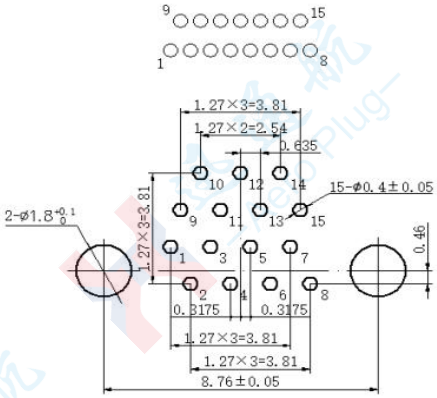

J63A-2H2-021-231-TH

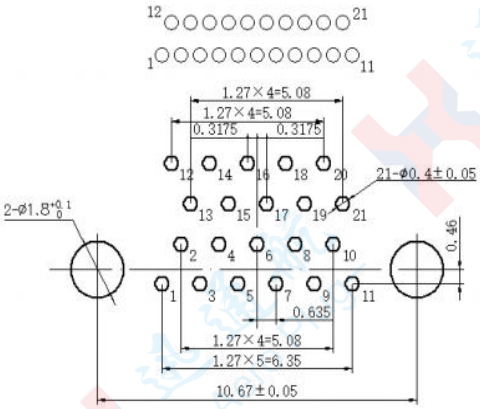

J63A-2H2-025-231-TH

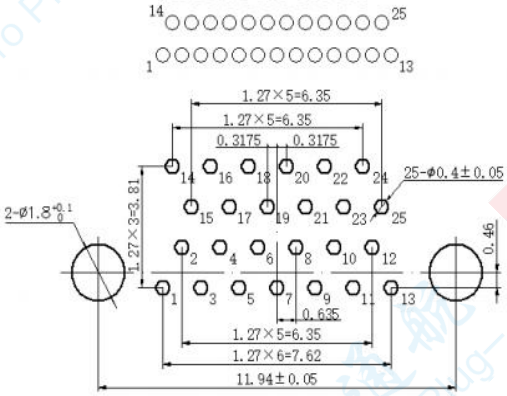

J63A-2H2-031-231-TH

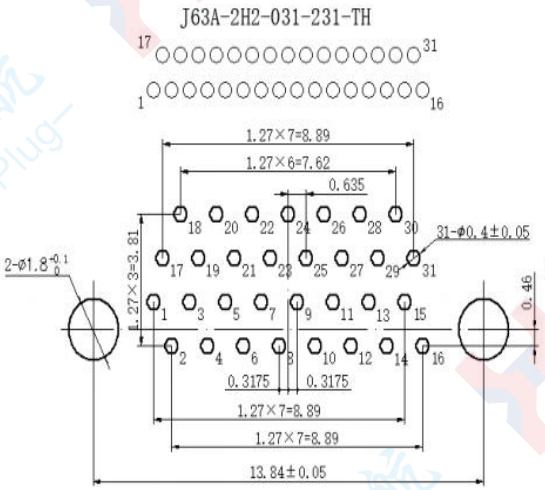

J63A-2H2-037-231-TH

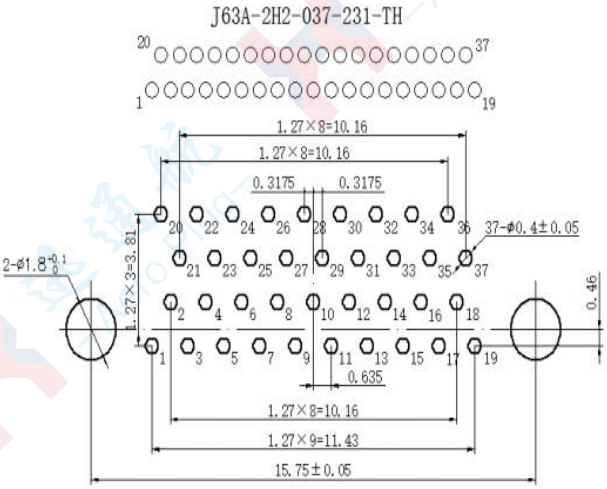

Printed circuit board package size
(for reference only))

J63A-2H2-051-231-TH

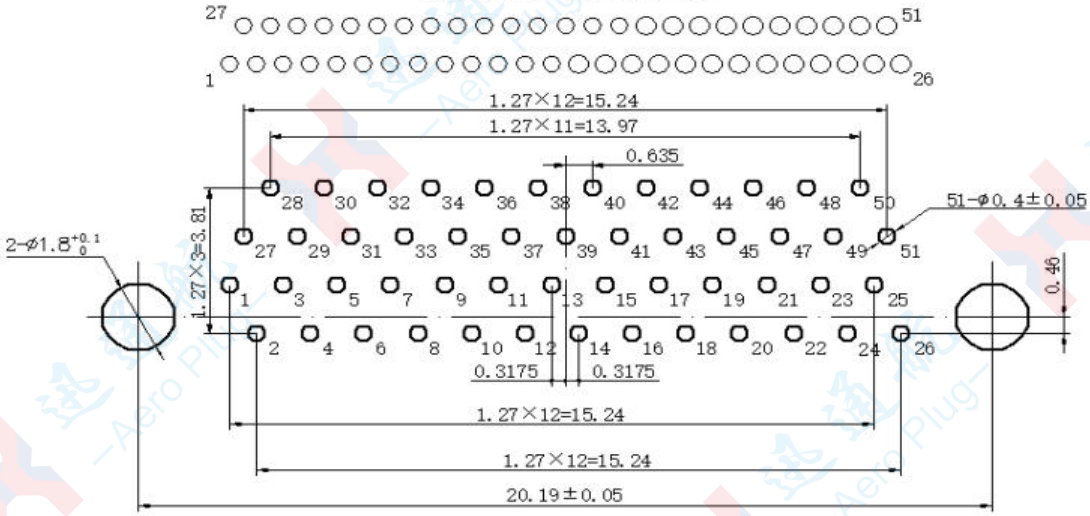

J63A-2H2-065-231-TH

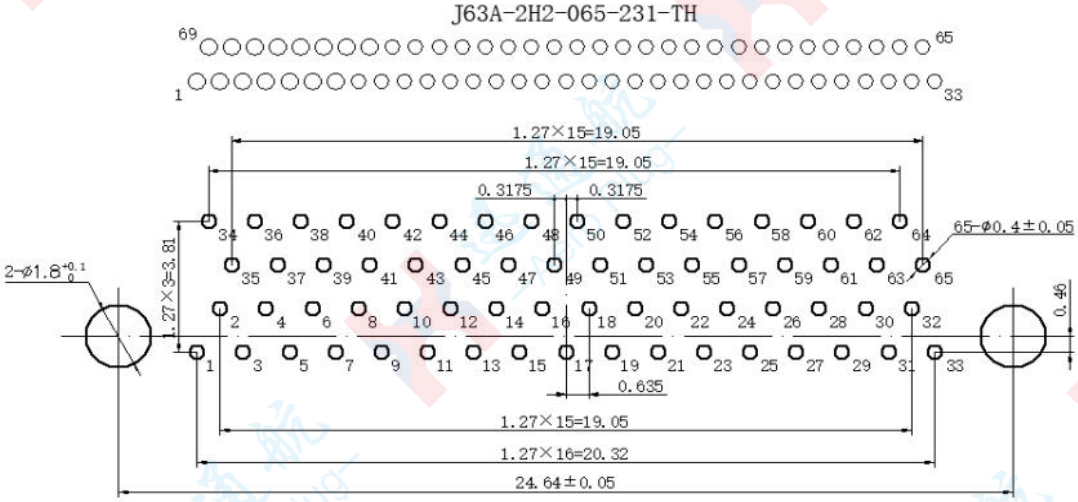

J63A-2H2-069-231-TH

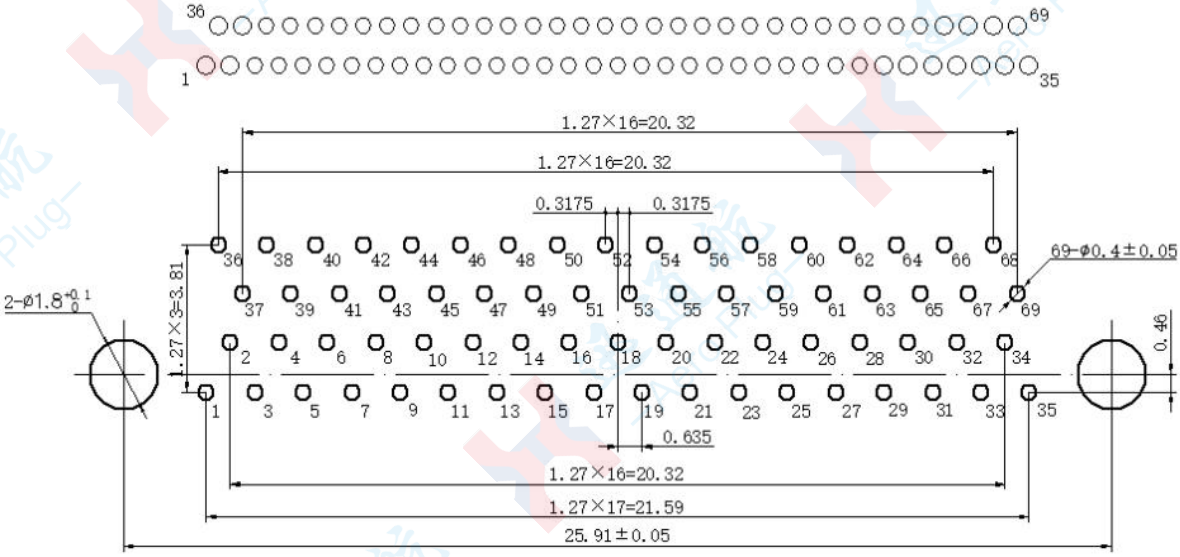

J63A Straddle-type flexible surface mount plug series

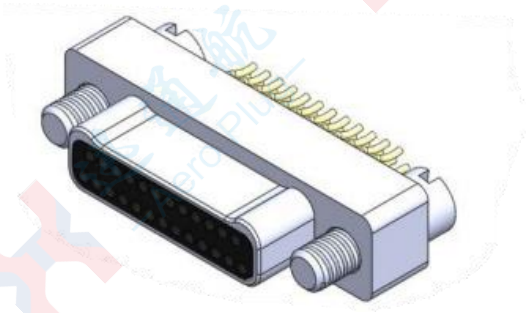

J63A - 2 1 2 - 025 - 12 1 - JC

- J63A: Main code name
- 2: Two rows of contact pieces
- 1: Crimp plug
- 2: The aluminum shell is nickel-plated
- 025: Number of contact pieces
- 12: Straddle-mounted surface mount type pins
- 1: Gold plating of contact pieces
- JC: Locking screw

Product features:

The free end of the product is not fixed and is usually connected to a socket with a connecting nut.

It is used for soldering flexible printed circuit boards at the pin ends, with a maximum thickness of 0.25.

A flat-groove locking screw (JC) is often selected and can be tightened with a small screwdriver。

The overall dimensions of this series:

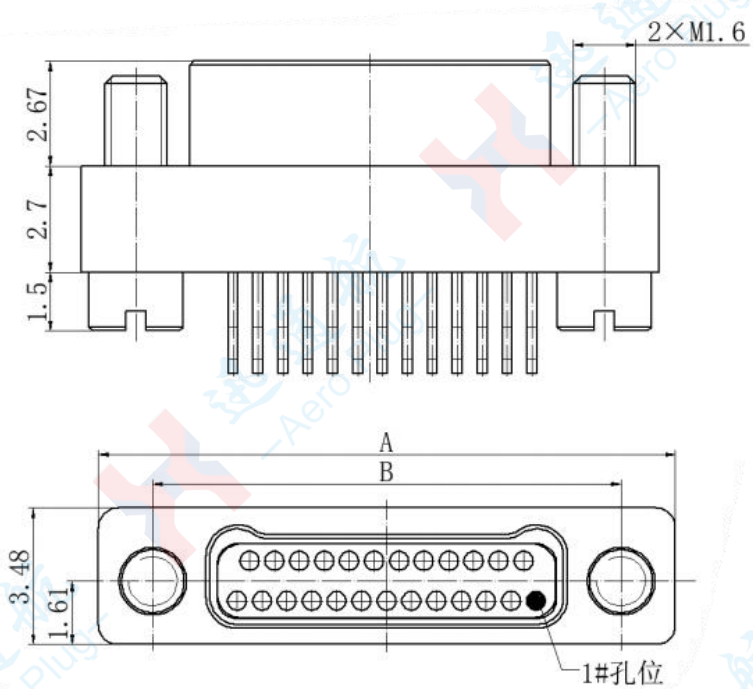

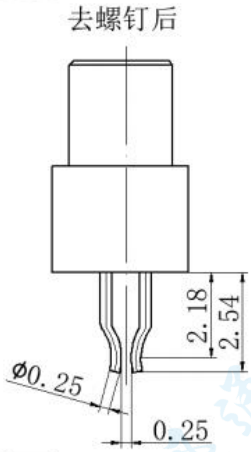

Specification and model	size	
	A	B
J63A-212-009-121-JC	9.63	6.86
J63A-212-015-121-JC	11.53	8.76
J63A-212-021-121-JC	13.44	10.67
J63A-212-025-121-JC	14.71	11.94
J63A-212-031-121-JC	16.61	13.84
J63A-212-037-121-JC	18.52	15.75
J63A-212-051-121-JC	22.96	20.19
J63A-212-065-121-JC	27.41	24.64
J63A-212-069-121-JC	28.68	25.91

Printed circuit board package size
(for reference only.)

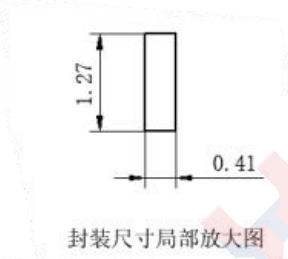

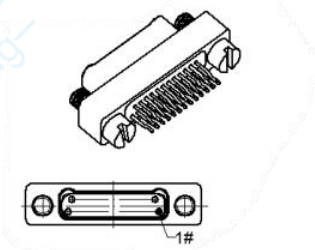

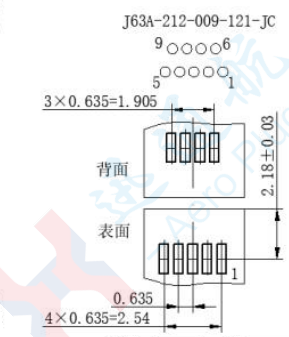

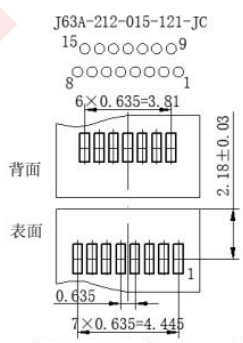

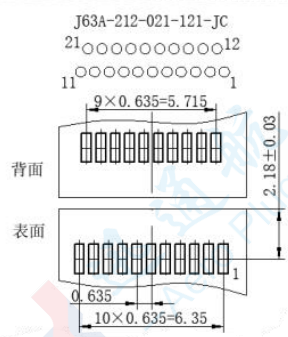

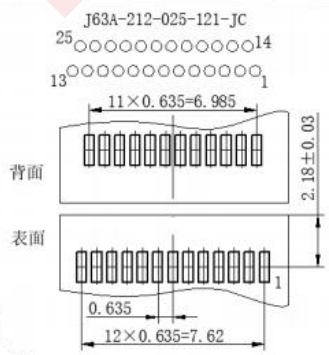

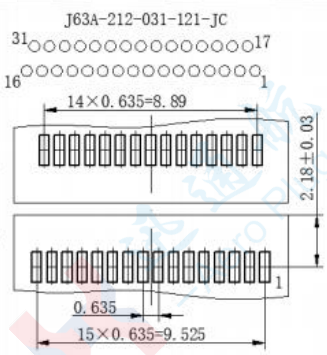

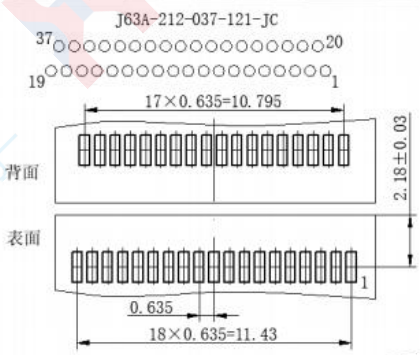

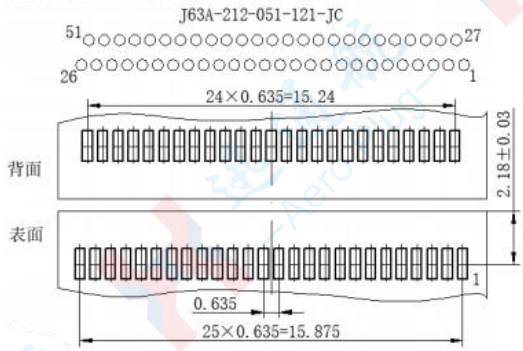

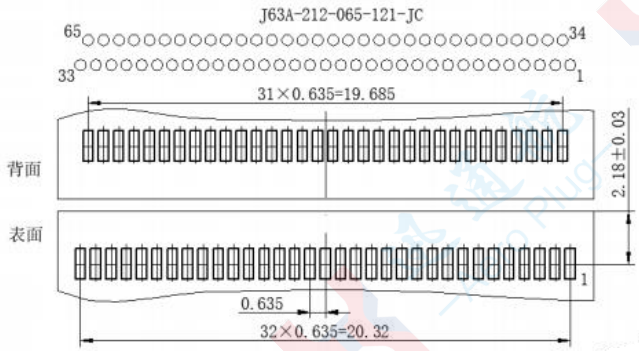

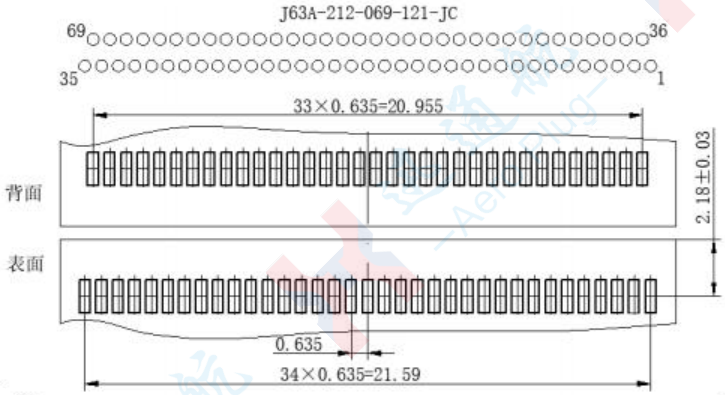

J63A Straddle-type flexible surface mount socket series

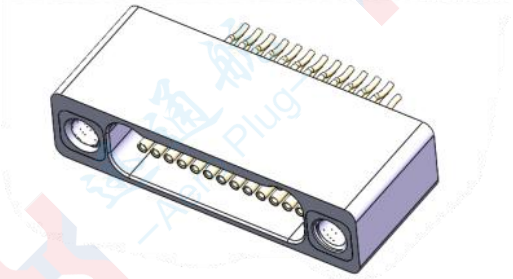

J63A - 2 2 2 - 025 - 22 1 - TH

- J63A: Main code name
- 2: Two rows of contact pieces
- 2: Vertical installation crimp socket
- 2: The aluminum shell is nickel-plated
- 025: Number of contact pieces
- 22: Straddle Mount Surface - Mount Socket
- 1: Gold plating of contact pieces
- TH: Connecting nut

Product features:

It is used in conjunction with a plug equipped with a locking screw.

It is used for soldering flexible printed circuit boards at the pin ends, with a maximum thickness of 0.25.

The overall dimensions of this series:

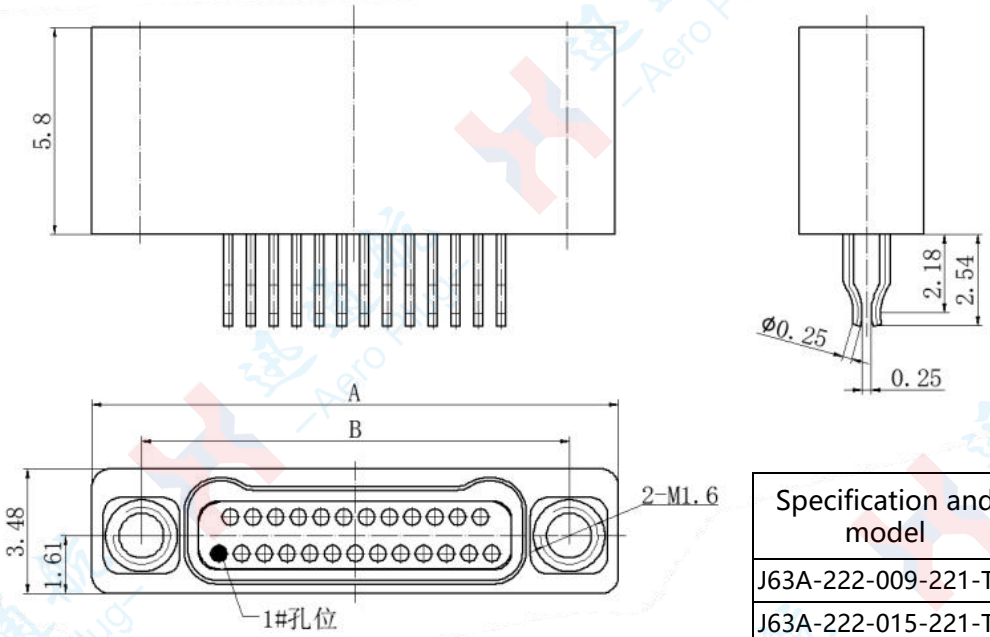

Specification and model	size	
	A	B
J63A-222-009-221-TH	9.63	6.86
J63A-222-015-221-TH	11.53	8.76
J63A-222-021-221-TH	13.44	10.67
J63A-222-025-221-TH	14.71	11.94
J63A-222-031-221-TH	16.61	13.84
J63A-222-037-221-TH	18.52	15.75
J63A-222-051-221-TH	22.96	20.19
J63A-222-065-221-TH	27.41	24.64
J63A-222-069-221-TH	28.68	25.91

Printed circuit board package size
(for reference only)

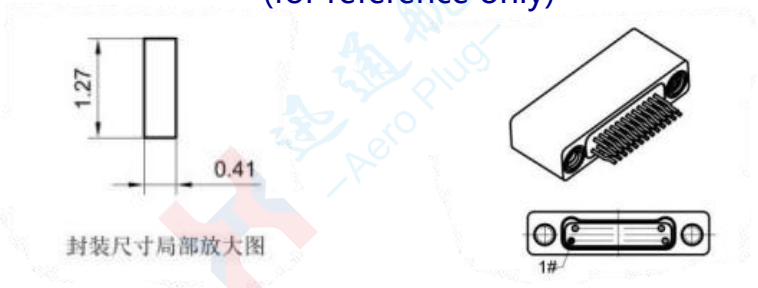

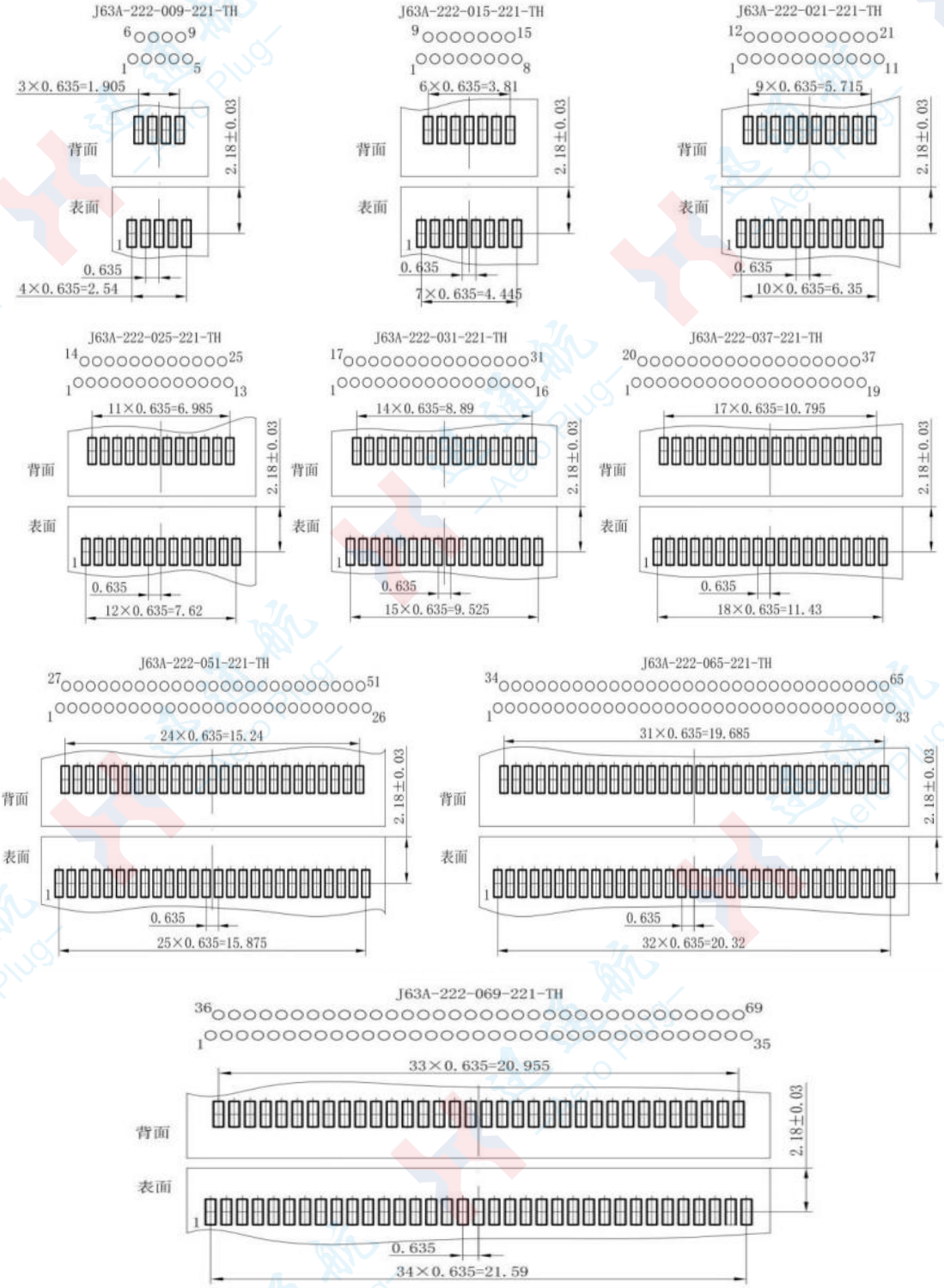

I. Product installation and docking instructions

Depending on the different structural forms of plugs and sockets, the installation of the fixed end of the connector and the mounting plate has the following forms: those with a threaded structure on the outer shell nut are vertically installed, while those with threaded mounting holes on the outer shell are horizontally installed.

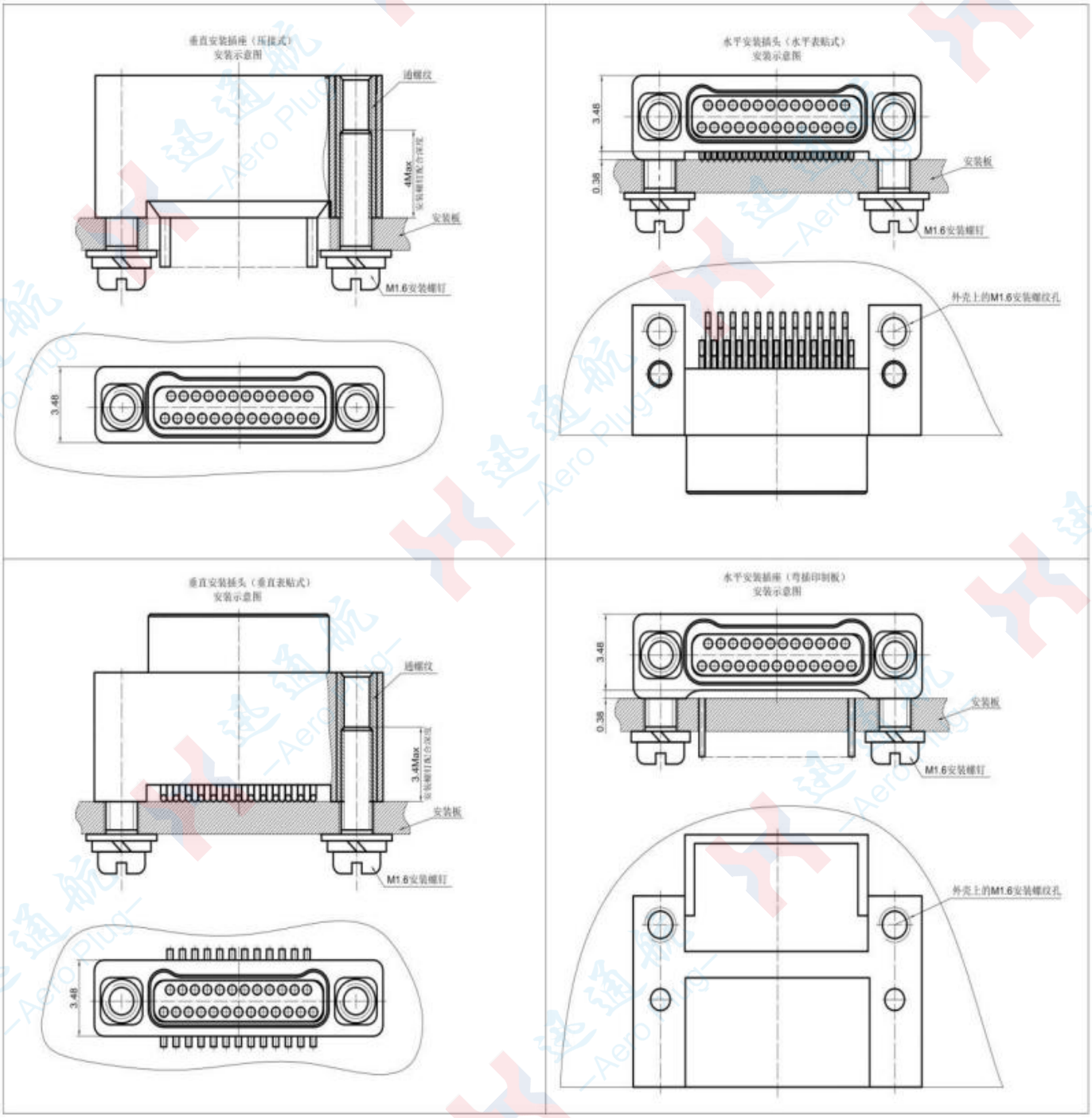

II. Installation and use

① Installation and usage steps for crimping type products:

Selection of installation screws (see Ⅰ)→ Installation (see Ⅲ)→ Fixation of wires (see Ⅳ)→ welding of wires (see Ⅴ)。

② Installation and usage steps for printed circuit board products:

Disassemble the sheath (see II)→ Select the installation screws (see I)→ install (see III)→ weld the pins (see VI).

Ⅰ Selection of installation screws

The specification of the screw is M1.6. The length of the screw is determined by the thickness of the installation plate and the allowable length of the screw shown in each series as illustrated. If flat washers and spring washers are not installed, medium-strength thread locking agent can be applied to the threaded parts of the installation screws for reinforcement

Screws are recommended to be selected as: GB67-M1.6×L (L represents length). Spring washers are recommended as: GB93 1.6. Flat washers are recommended as: GB848-1.6. If thread locking agent is used for auxiliary fixation, spring washers and flat washers do not need to be selected. If you request our company to provide installation screws, please specify it in the contract.

Ⅱ Disassembly of the protective cover of printed circuit board products

The function of the sheath is to protect the tail pins of the product. The sheath is fixed to the shell by a slotted screw. When removing the sheath, be careful not to touch the pins,first, remove the screws, then carefully take out the sheath in parallel to avoid deformation of the pins

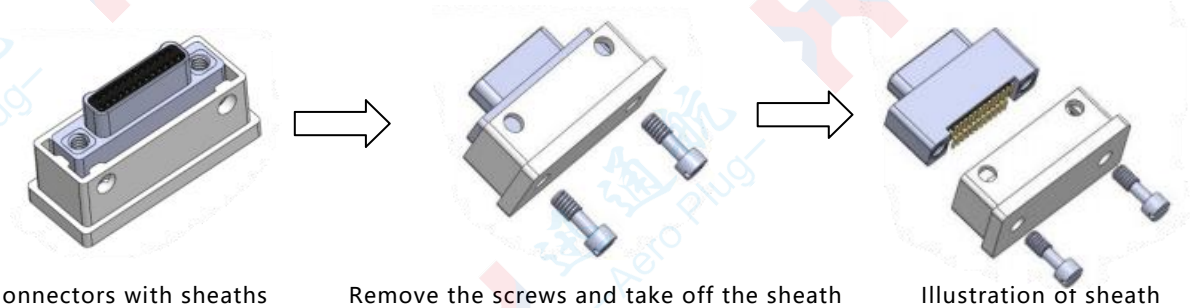

Connectors with sheaths disassembly | Remove the screws and take off the sheath | Illustration of sheath

Ⅲ Installation

Install according to the corresponding product's opening dimensions and installation diagram. When anti-loosening washers are not used, apply thread locking agent to the screw threads.

ⅣCabled products require cable fixation.

As the wires used in the product are prone to damage, affecting the product's usage, it is best to fix the cables on the installation panel. Generally, the wires 50 to 100mm away from the product's tail end should be bound and fixed.

Ⅴ Welding wire

When connecting wires to printed circuit boards or other places by welding, it is recommended to potting the welding points with glue to prevent the core wires from breaking at the welding points. Protective measures should also be taken for the welding of wires to other places.

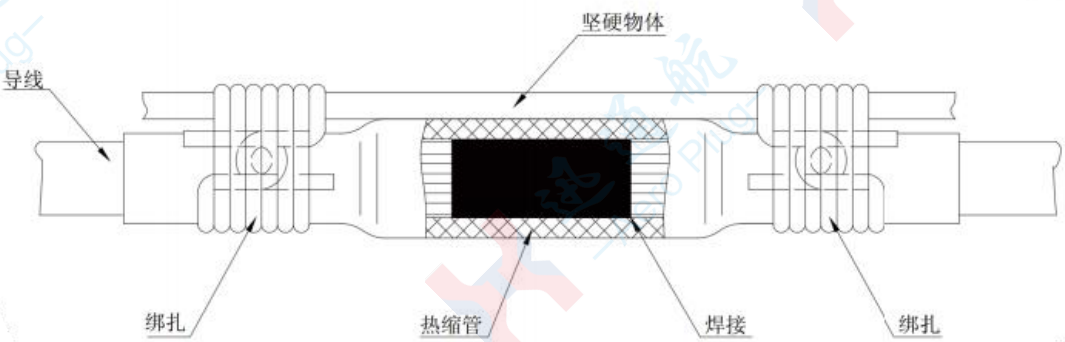

Binding diagram

VI Welding pins

1） Pin soldering

After the through-hole printed circuit board products are installed, the pins should be welded in accordance with QJ3117-99 "Technical Requirements for Manual Welding Process of Aerospace Electronic and Electrical Products".

2）Soldering of pins for surface mount products

For surface mount products, it is recommended to use reflow soldering technology for welding. Operate in accordance with QJ3173-2003 "Technical Requirements for Reflow Soldering of Aerospace Electronic and Electrical Products", and install and fix the surface mount products with screws.

III. Connection Instructions

1.Connector with locking screw

When connecting the product, first align the plug and socket, then use a small flat-head screwdriver with a flat-head slot to tighten the screws. When tightening, you must first tighten one side by half a turn, then the other side by half a turn. Repeat this operation until the connection is complete. Do not twist one side completely (or too much) and then twist the other side to avoid damaging the product. After the headstock shell is basically aligned and screwed in place, no further force should be applied.

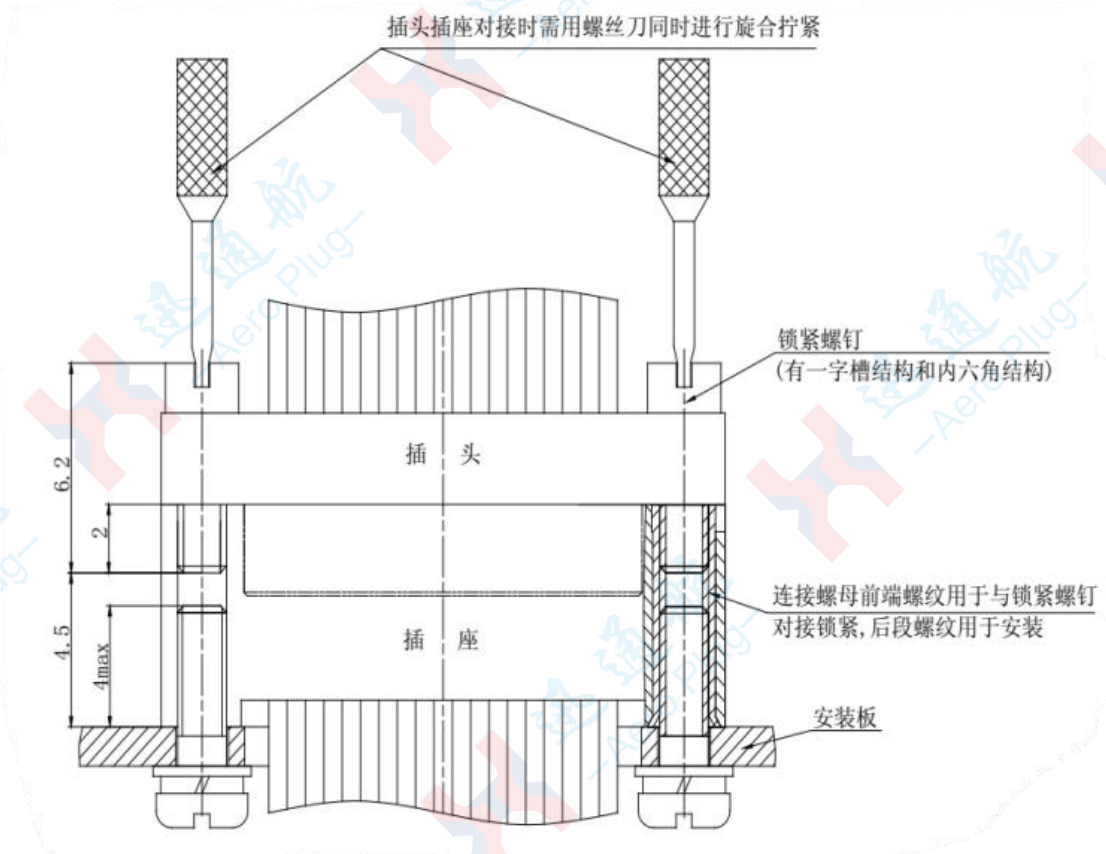

Schematic diagram of plug and socket connection, locking and installation

2.Connector with guiding function

Connector with Guiding Function: The plug is equipped with guide pins, and the socket with guide holes. During use, first fix the connector to the mounting plate. For mating: align the guide pins of the plug with the guide holes of the socket first, then apply gentle force to gradually align the product and fully mate the connector (Do not mate with brute force; forced mating will damage the product).

After the connector is fully mated, the mounting plate should be secured to prevent loosening of the plug and socket, and to avoid damage to the connector caused by bearing the weight of the mounting plate.

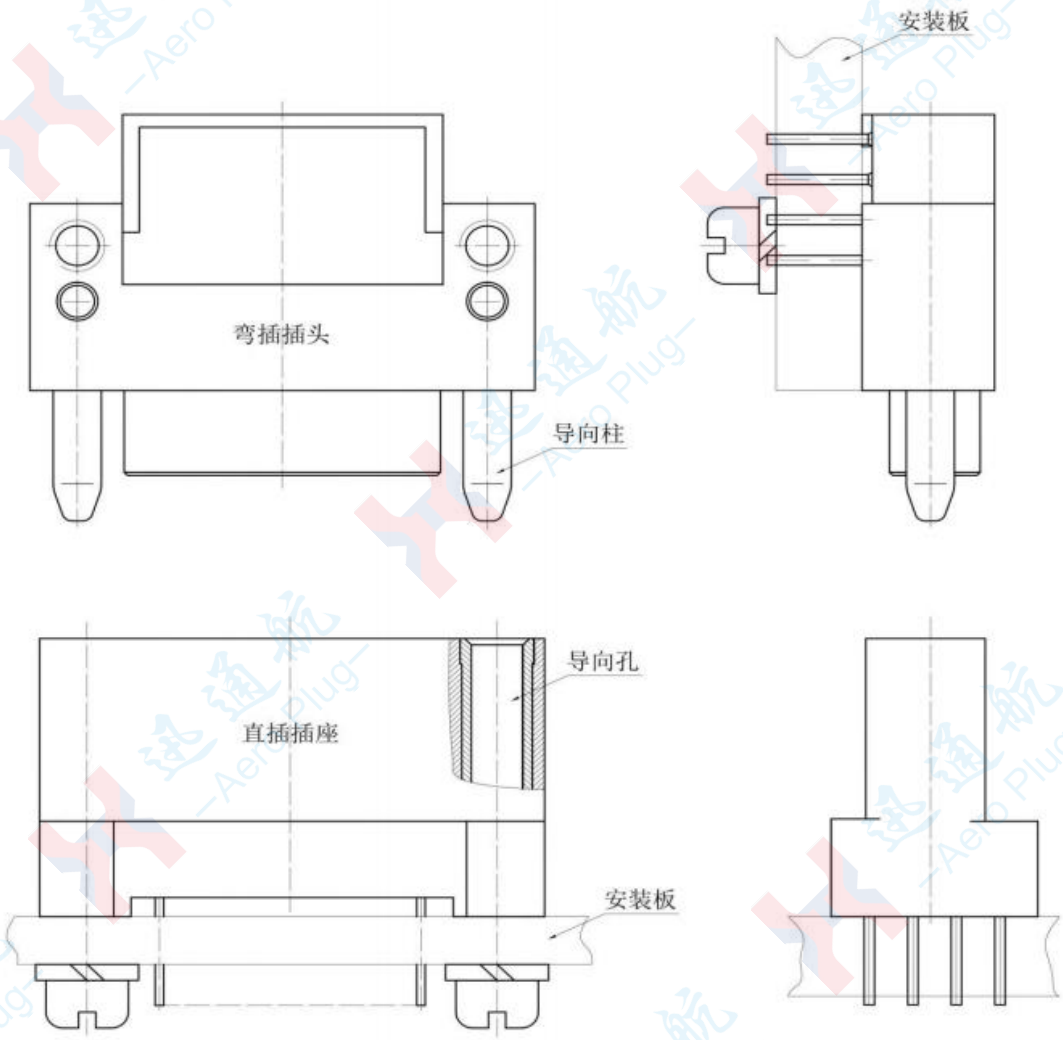

J63A single-row series micro-rectangular electrical connectors

Product features:

- Available in 5, 9, 15, 21, 25, 31, 37, and 51 contact configurations;
- Adopts twisted pin structure with a pitch of 0.635mm;
- It takes up little space. The head and base are connected by screw and nut screwing, providing smooth insertion and extraction and reliable locking;
- High density, small size, light weight, and high reliability;
- The product is a head-mounted needle and a base-mounted hole fixed combination. The one with a locking screw is the free end, and the one with a connecting nut is the fixed end. The free end and the fixed end are screwed in and locked by screws and nuts;
- Executive standard: GJB 7245-2011 General Specification for Ultra-Miniature Rectangular Electrical Connectors with Shell Positioning;
- The wire size of the crimped product is 0.035mm ²

Technical features:

- Ambient temperature: -55℃ ~ +125℃
- Vibration: 10Hz to 2000Hz, 196m/s ²
- Random Vibration: Power Spectral Density (PSD) 0.4 G²/Hz, Total Acceleration Root Mean Square (RMS) Value 23.1 G
- Impact: 980m/s2 6ms
- Rated current: 1A
- Contact resistance: ≤ 21mΩ
- Insulation resistance: ≥ 5000MΩ 100VDC
- Material Voltage Rating: 250V
- Mechanical life: 200 times

Arrangement of specification holes

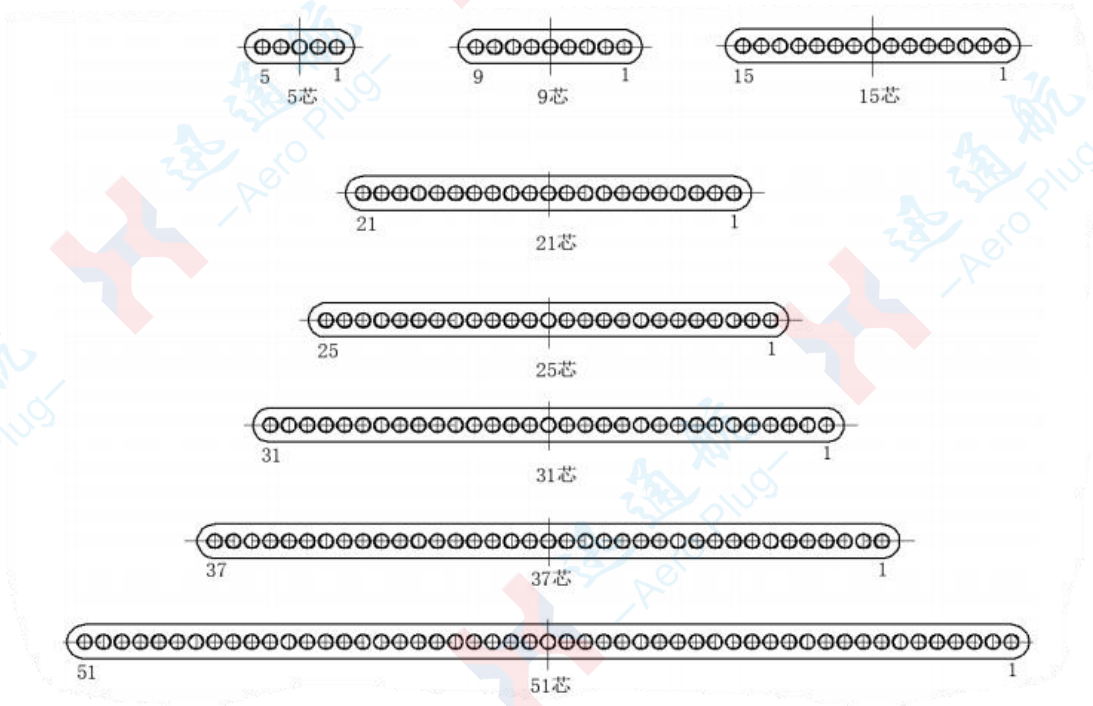

Note: Viewed from the plug connection end

Model naming：

J63A - X X X – XXX - XX X XXX

① ② ③ ④ ⑤ ⑥ ⑦ ⑧

① Main name code: J63A

② Contact piece arrangement: 1 - Single-row contact pieces

③ Product type:

1—Straight plug (crimp type)
2—Straight socket (crimp type)
3—Horizontal Mount Crimp Plug
4—Horizontal Mount Crimp Socket
9—Vertical Mount Crimp Plug
A—Vertical Surface Mount Plug
B—Vertical Surface Mount Socket
C—Horizontal Mount Surface Mount Plug
D—Horizontal Mount Surface Mount Socket
E—Right-Angle Through-Hole PCB Plug
F—Right-Angle Through-Hole PCB Socket
G—Straight Through-Hole PCB Plug
H—Straight Through-Hole PCB Socket
J—Crimp-type Integral

④ Shell coating: 2 - electroless nickel plating

⑤ The number of contact pieces: 5, 9, 15, 21, 25, 31, 37, 51, etc. The number of contact pieces is expressed by a three-digit number

⑥ Contact piece termination form: 12 - vertical/horizontal/straddle-type surface mount pins

22 - Vertical/Horizontal/Straddle - type Surface Mount Jacks
13 - Through - hole PCB Type Pin, Pin Length: 2.77mm
23 - Through - hole PCB Type Jack, Pin Length: 2.77mm
14 - Through - hole PCB Type Pin, Pin Length: 3.56mm
24 - Through - hole PCB Type Jack, Pin Length: 3.56mm
15 - Through - hole PCB Type Pin, Pin Length: 4.37mm
25 - Through - hole PCB Type Jack, Pin Length: 4.37mm
16 - Crimp type pins
26 - Crimped socket
32-Right - angle PCB Type Pin, Pin Length: 2.77mm
43 - Right - angle PCB Type Jack, Pin Length: 2.77mm
33 - Right - angle PCB Type Pin, Pin Length: 3.56mm
44 - Right - angle PCB Type Jack, Pin Length: 3.56mm
34 - Right - angle PCB Type Pin, Pin Length: 4.37mm
45 - Right - angle PCB Type Jack, Pin Length: 4.37mm
PP - Plug - to - Plug Mating Connection
PS - Plug - to - Socket Mating Connection
SS - Socket - to - Socket Mating Connection

⑦ Contact piece plating: 1 - Gold plating

⑧ Locking part type: 00 - No locking part; JC - Locking screw (straight slot); JC1 - Locking screw (hexagon socket, not recommended); TH - Connecting nut; TH1 - Connection nut with welding installation function; SH - Guide sleeve with welding installation function; NH - Guide sleeve with nut mounting; DZ - Guide Column DK- Guide hole. (All locking parts are non-detachable.

Product selection and matching

The product is connected by screwing screws and nuts to achieve progressive connection, avoiding impact on the product and ensuring that the product and surrounding components are not damaged. Therefore, when selecting products, one end should be a connecting nut (TH), and the other end should be equipped with a locking screw (JC).

For products with guiding accessories, the products only come with guiding accessories. After connection, the mounting plate needs to be fixed to prevent the connector from coming out. It is usually equipped with a guide column at one end and a guide hole at the other end。

Partial product pairing table：

Main model	Pairable models
①Crimping plug with locking screw： J63A-112-×××-161-JC ②Crimping plug with locking screw： J63A-112-×××-121-JC ③Flexible printed circuit board plug with locking screw and bent insert J63A-1E2-×××-321-JC ④Straddle-type flexible surface mount plug： J63A-112-×××-121-JC	J63A-122-×××-261-TH（Vertical installation crimp socket）
	J63A-142-×××-261-TH（Install the crimped socket horizontally）
	J63A-1B2-×××-221-TH（Vertical Surface Mount Socket）
	J63A-1D2-×××-221-TH（Horizontal surface mount socket）
	J63A-1F2-×××-431-TH（Right-angle Printed Circuit Board socket）
	J63A-1H2-×××-231-TH（Through-hole printed circuit board socket）
	J63A-122-×××-221-TH（Straddle-type flexible surface mount socket）
①Crimping socket with locking screw： J63A-122-×××-261-JC	J63A-132-×××-161-TH（Install the crimped plug horizontally）
	J63A-1A2-×××-121-TH（Vertical surface mount plug）
	J63A-1C2-×××-121-TH（Horizontal surface mount plug）
	J63A-1E2-×××-321-TH（Bend into the printed circuit board plug）
	J63A-1G2-×××-131-TH（Through-hole printed circuit board plug）
	J63A-192-×××-161-TH（Install the crimping plug vertically)

J63A crimp plug

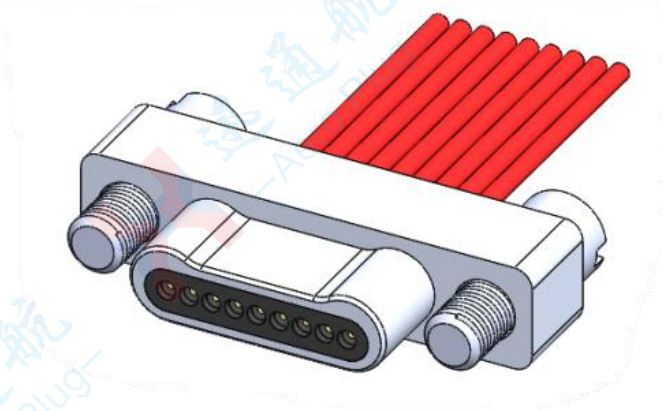

J63A - 1 1 2 - 009 - 16 1 - JC

- J63A: Main code name
- 1: Single-row contact piece
- 1: Crimp plug
- 2: The aluminum shell is nickel-plated
- 009: Number of contact pieces
- 16: Crimping the pins
- 1: Gold plating of contact pieces
- JC: Locking screw

Product features:

The free end of the product is not fixed and is usually connected to a socket with a connecting nut. The screws are fixed on the shell and cannot be disassembled.

A flat-groove locking screw (JC) is often selected and can be tightened with a small screwdriver。

The overall dimensions of this series:

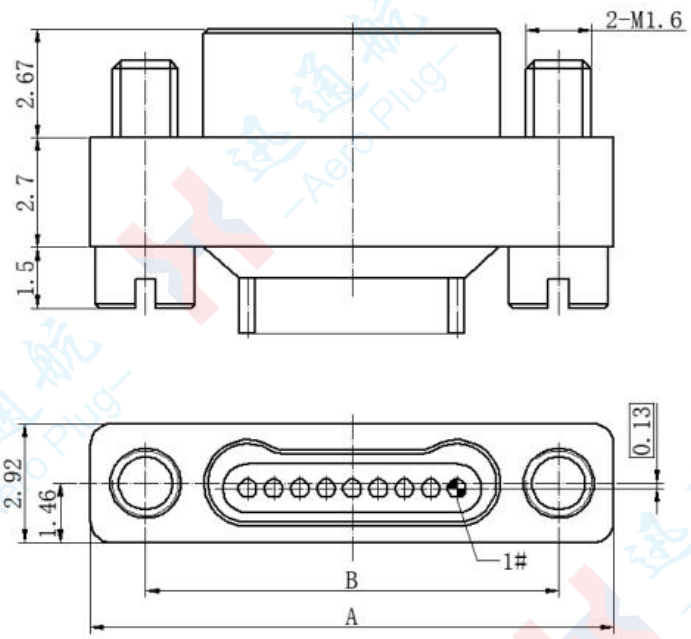

Specification and model	size	
	A	B
J63A-112-005-161-JC	10.16	7.49
J63A-112-009-161-JC	12.7	10.03
J63A-112-015-161-JC	16.51	13.84
J63A-112-021-161-JC	20.32	17.65
J63A-112-025-161-JC	22.86	20.19
J63A-112-031-161-JC	26.67	24
J63A-112-037-161-JC	30.48	27.81
J63A-112-051-161-JC	39.37	36.7

J63A crimp socket

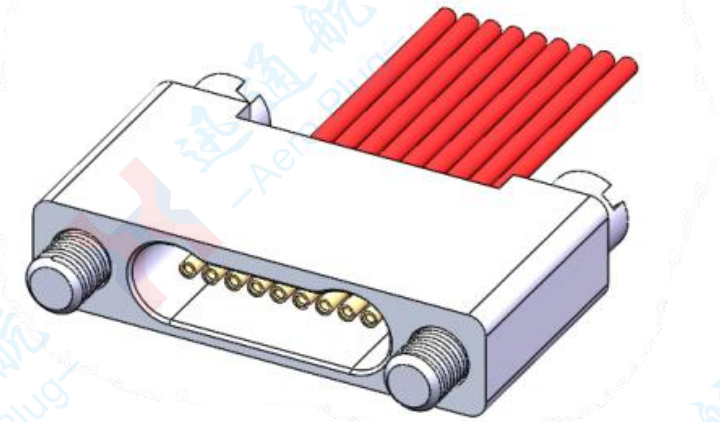

J63A - 1 2 2 - 009 - 26 1 - JC

- J63A: Main code name
- 1: Single-row contact piece
- 2: Crimp socket
- 2: The aluminum shell is nickel-plated
- 009: Number of contact pieces
- 26: Crimping the socket
- 1: Gold plating of contact pieces
- JC: Locking screw

Product features:

The free end of the product is not fixed and is usually connected to a plug with a connecting nut. The screws are fixed on the shell and cannot be disassembled.

A flat-groove locking screw (JC) is often selected and can be tightened with a small screwdriver。

Dimensions for this series:

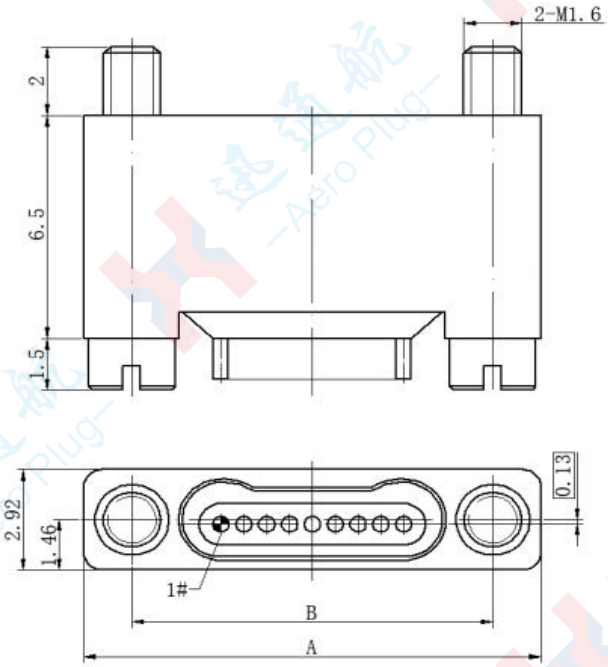

Specification and model	size	
	A	B
J63A-122-005-261-JC	10.16	7.49
J63A-122-009-261-JC	12.7	10.03
J63A-122-015-261-JC	16.51	13.84
J63A-122-021-261-JC	20.32	17.65
J63A-122-025-261-JC	22.86	20.19
J63A-122-031-261-JC	26.67	24
J63A-122-037-261-JC	30.48	27.81
J63A-122-051-261-JC	39.37	36.7

J63A vertical crimp socket

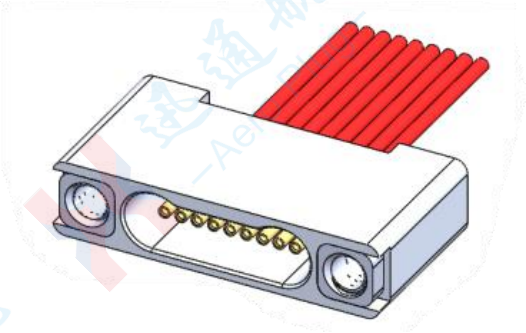

J63A - 1 2 2 - 009 - 26 1 - TH

- J63A: Main code name
- 1: Single-row contact piece
- 2: Crimp socket
- 2: The aluminum shell is nickel-plated
- 009: Number of contact pieces
- 26: Crimping the socket
- 1: Gold plating of contact pieces
- TH: Connecting nut

Product features:

The coupling nut features a full-thread structure: the front section of the thread is used for locking with the locking screw, while the rear section is for installation; it mates with plugs equipped with locking screws.。

The overall dimensions of this series:

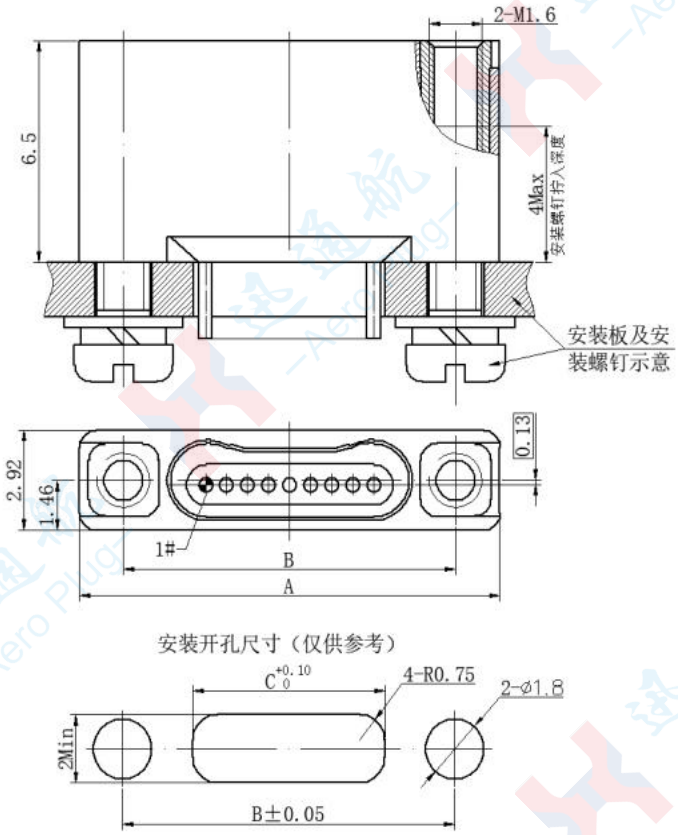

Specification and model	size		
	A	B	C
J63A-122-005-261-TH	10.16	7.49	3.3
J63A-122-009-261-TH	12.7	10.03	5.8
J63A-122-015-261-TH	16.51	13.84	9.6
J63A-122-021-261-TH	20.32	17.65	13.4
J63A-122-025-261-TH	22.86	20.19	16
J63A-122-031-261-TH	26.67	24	19.8
J63A-122-037-261-TH	30.48	27.81	23.6
J63A-122-051-261-TH	39.37	36.7	32.5

J63A press-fitting socket with guide hole nut installation

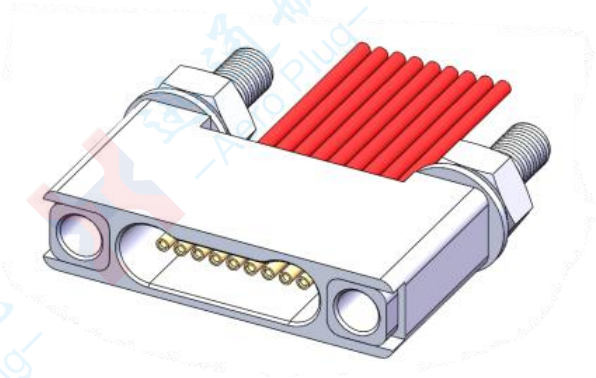

J63A - 1 2 2 - 009 - 26 1 - NH

- J63A: Main code name
- 1: Single-row contact piece
- 2: Crimp socket
- 2: The aluminum shell is nickel-plated
- 009: Number of contact pieces
- 26: Crimping the socket
- 1: Gold plating of contact pieces
- NH: Install the guide sleeve with nuts

Product features:

Connectors are equipped with guide holes and are generally connected to plugs with guide posts.

The overall dimensions of this series:

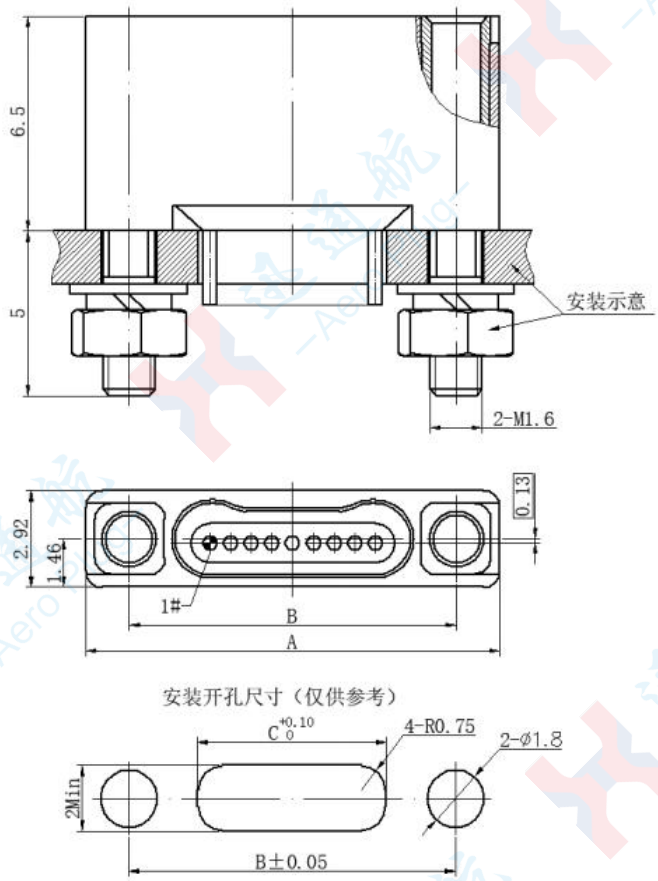

Specification and model	size		
	A	B	C
J63A-122-005-261-NH	10.16	7.49	3.3
J63A-122-009-261-NH	12.7	10.03	5.8
J63A-122-015-261-NH	16.51	13.84	9.6
J63A-122-021-261-NH	20.32	17.65	13.4
J63A-122-025-261-NH	22.86	20.19	16
J63A-122-031-261-NH	26.67	24	19.8
J63A-122-037-261-NH	30.48	27.81	23.6
J63A-122-051-261-NH	39.37	36.7	32.5

J63A horizontal installation crimping plug

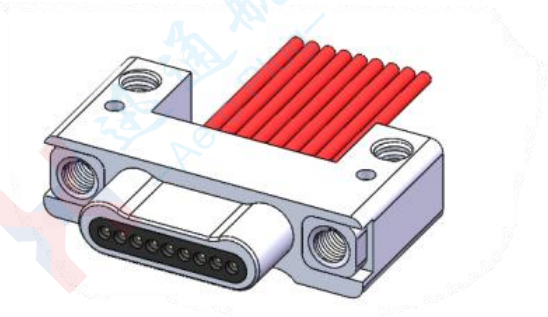

J63A - 1 3 2 - 009 - 16 1 - TH

- J63A: Main code name
- 1: Single-row contact piece
- 3: Horizontal crimp plug
- 2: The aluminum shell is nickel-plated
- 009: Number of contact pieces
- 16: Crimping the pins
- 1: Gold plating of contact pieces
- TH: Connecting nut

Product features:

Horizontal installation: When installing, the long row end of the contact parts should be attached to the installation plate.

Connect to the socket with a locking screw.

The overall dimensions of this series:

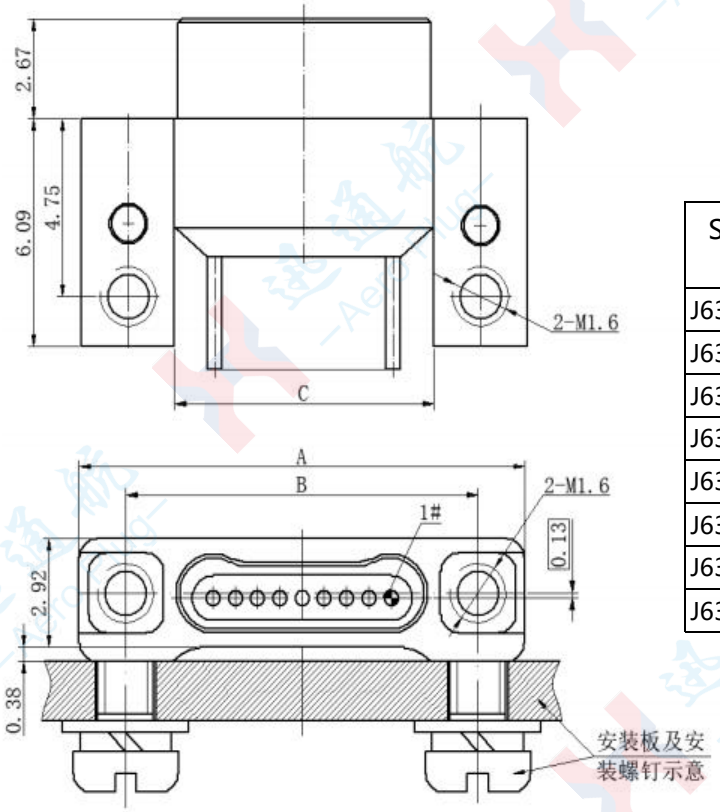

Specification and model	size		
	A	B	C
J63A-132-005-161-TH	10.16	7.49	4.84
J63A-132-009-161-TH	12.7	10.03	7.38
J63A-132-015-161-TH	16.51	13.84	11.19
J63A-132-021-161-TH	20.32	17.65	15
J63A-132-025-161-TH	22.86	20.19	17.54
J63A-132-031-161-TH	26.67	24	21.35
J63A-132-037-161-TH	30.48	27.81	25.16
J63A-132-051-161-TH	39.37	36.7	34.05

J63A horizontal installation crimp socket

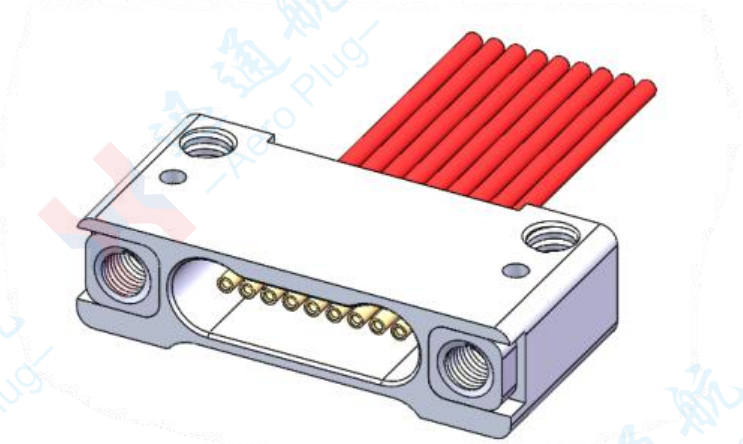

J63A - 1 4 2 - 009 - 26 1 - TH

- J63A: Main code name
- 1: Single-row contact piece
- 4: Horizontal crimp socket
- 2: The aluminum shell is nickel-plated
- 009: Number of contact pieces
- 26: Crimping the socket
- 1: Gold plating of contact pieces
- TH: Connecting nut

Product features:

Horizontal installation: When installing, the long row end of the contact parts should be attached to the installation plate.
Connect with the plug with a locking screw.

The overall dimensions of this series:

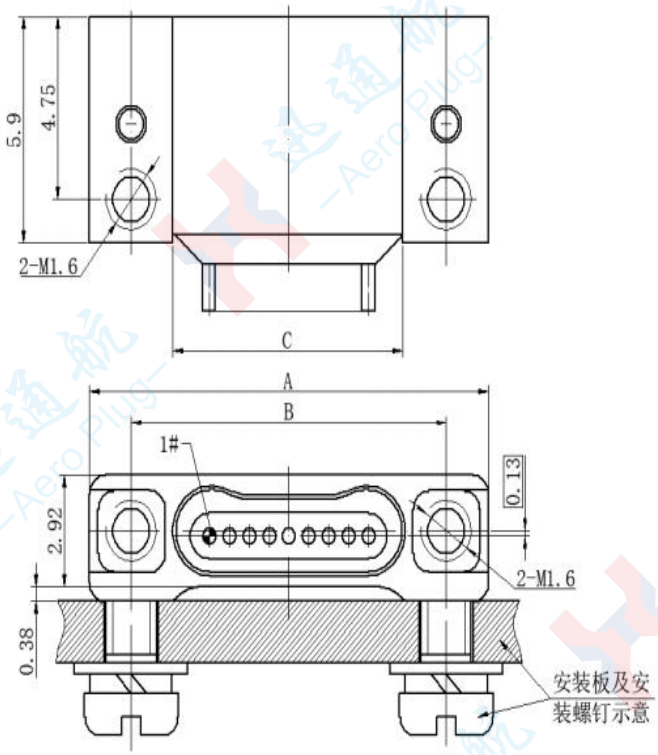

Specification and model	size		
	A	B	C
J63A-142-005-261-TH	10.16	7.49	4.84
J63A-142-009-261-TH	12.7	10.03	7.38
J63A-142-015-261-TH	16.51	13.84	11.19
J63A-142-021-261-TH	20.32	17.65	15
J63A-142-025-261-TH	22.86	20.19	17.54
J63A-142-031-261-TH	26.67	24	21.35
J63A-142-037-261-TH	30.48	27.81	25.16
J63A-142-051-261-TH	39.37	36.7	34.05

J63A Vertical-Mount Crimp Plug

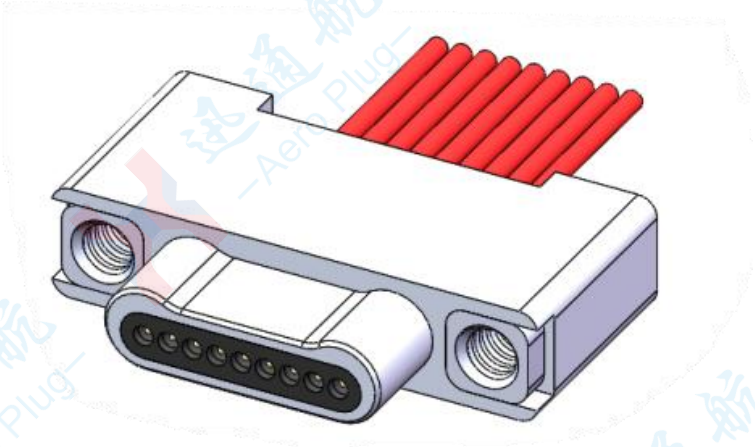

J63A - 1 9 2 - 009 - 16 1 - TH

- J63A: Main code name
- 1: Single-row contact piece
- 9: Vertical crimp plug
- 2: The aluminum shell is nickel-plated
- 009: Number of contact pieces
- 16: Crimping the pins
- 1: Gold plating of contact pieces
- TH: Connecting nut

Product features:

The coupling nut features a full-thread structure: the front section of the thread is used for locking with the locking screw, and the rear section is for installation; this product mates with sockets equipped with locking screw

The overall dimensions of this series:

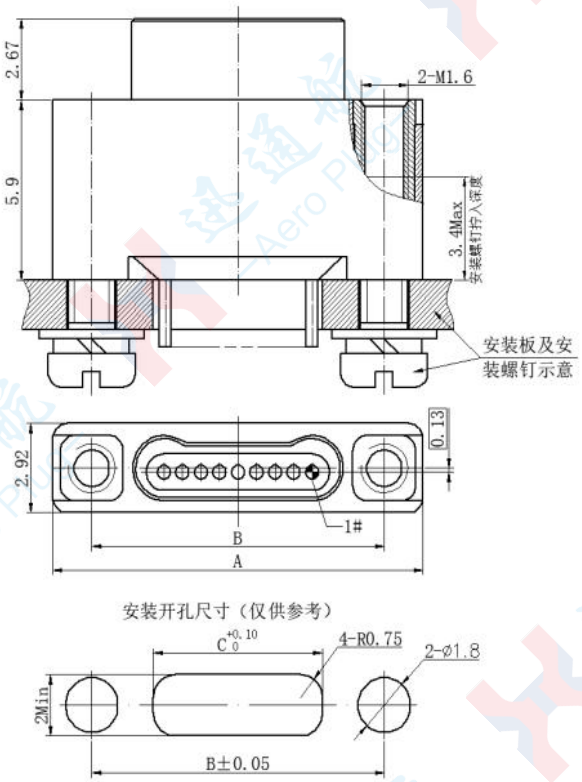

Specification and model	size		
	A	B	C
J63A-192-005-161-TH	10.16	7.49	3.3
J63A-192-009-161-TH	12.7	10.03	5.8
J63A-192-015-161-TH	16.51	13.84	9.6
J63A-192-021-161-TH	20.32	17.65	13.4
J63A-192-025-161-TH	22.86	20.19	16
J63A-192-031-161-TH	26.67	24	19.8
J63A-192-037-161-TH	30.48	27.81	23.6
J63A-192-051-161-TH	39.37	36.7	32.5

J63A press-connected type

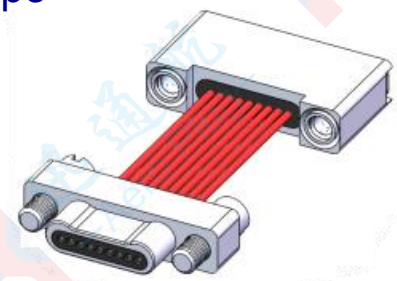

J63A - 1 J 2 - 009 - PS 1

- J63A: Main code name
- 1: Single-row contact piece
- J: Integrated Connector
- 2: The aluminum shell is nickel-plated
- 009: Number of contact pieces
- PS: Head and seat connected (PP- head connected; SS- seat connected)
- 1: Gold plating of contact pieces

Product features:

The locking parts of this logo series are matched as follows: plugs with locking screws, sockets with connecting nuts, and the form is unique. The connection point numbers correspond one-to-one. Other requirements should be ordered in accordance with "Other Order Marking Forms".

The models at both ends of the connector are marked according to the product name. If you order J63A-1J2-009-PS1, both the plug and socket models are marked as J63A-1J2-009-PS1.

Other forms of order marking: When ordering split-type cables, the specific product models of the split-type products can also be listed separately, and it is sufficient to indicate that they are made into split-type electric cables, without necessarily following the aforementioned "order marking". For example, J63A-112-009-161-JC and J63A-122-009-261-TH are connected, and the dot numbers correspond one-to-one. It is recommended to place orders in this way, which can meet a variety of special requirements.

The overall dimensions of this series:

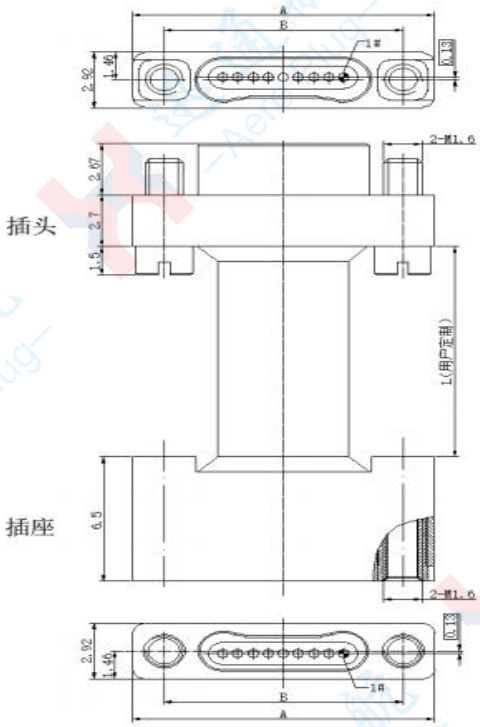

Specification and model	size	
	A	B
J63A-1J2-005-PS1	10.16	7.49
J63A-1J2-009-PS1	12.7	10.03
J63A-1J2-015-PS1	16.51	13.84
J63A-1J2-021-PS1	20.32	17.65
J63A-1J2-025-PS1	22.86	20.19
J63A-1J2-031-PS1	26.67	24
J63A-1J2-037-PS1	30.48	27.81
J63A-1J2-051-PS1	39.37	36.7

J63A vertical surface mount plug

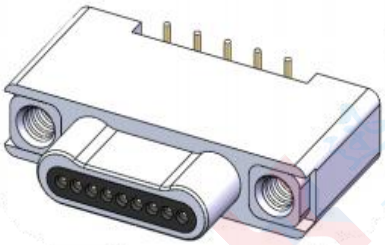

J63A-1A2-009-121-TH

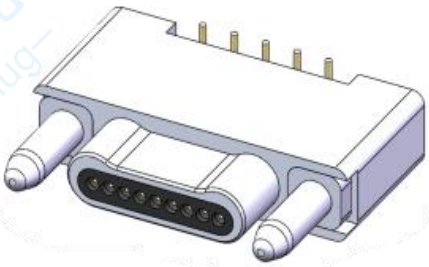

J63A-1A2-09-121-DZ

J63A - 1 A 2 - 009 - 12 1 - TH/DZ

- J63A: Main code name
- 1: Single-row contact piece
- A: Vertical surface mount plug
- 2: The aluminum shell is nickel-plated
- 009: Number of contact pieces
- 12: Vertical surface mount type pins
- 1: Gold plating of contact pieces
- TH/DZ: Connecting nut/guide column

Product features:

The product is welded and used using SMT technology.
J63A-1A2-009-121-TH is connected to the socket with a locking screw. The pins of J63A-1A2-009-121-DZ are soft and prone to deformation when connected to sockets with guide holes. When in use, the pins need to be protected.

The overall dimensions of this series:

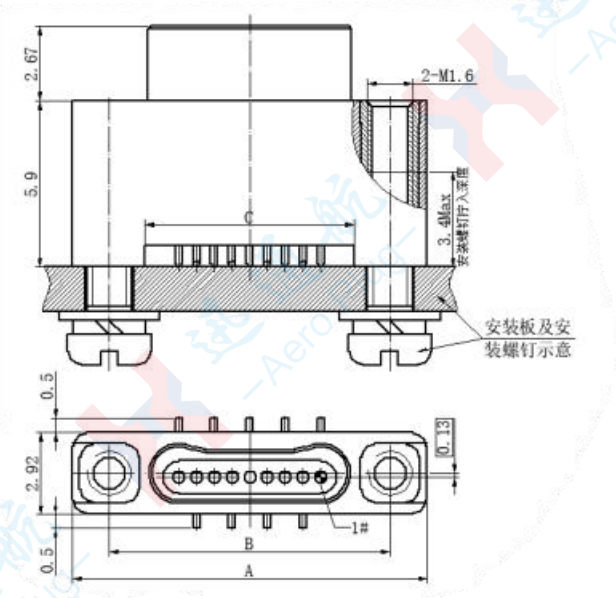

J63A-1A2-009-121-TH

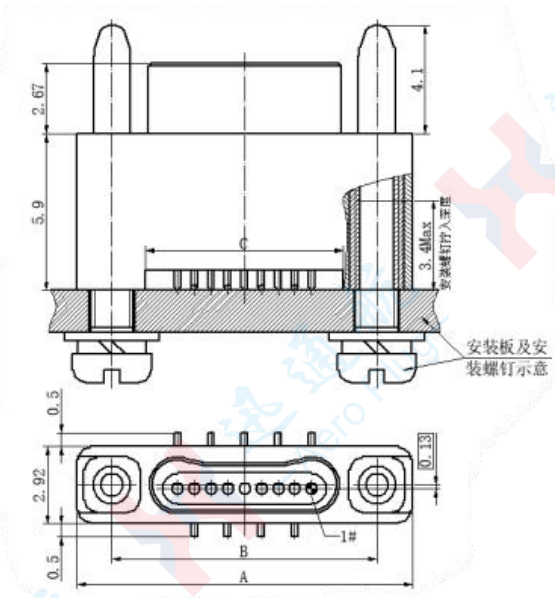

J63A-1A2-09-121-DZ

Model specification	A	B	C	Model specification	A	B	C
J63A-1A2-005-121-TH/DZ	10.16	7.49	4.84	J63A-1A2-025-121-TH/DZ	22.86	20.19	17.54
J63A-1A2-009-121-TH/DZ	12.7	10.03	7.38	J63A-1A2-031-121-TH/DZ	26.67	24	21.35
J63A-1A2-015-121-TH/DZ	16.51	13.84	11.19	J63A-1A2-037-121-TH/DZ	30.48	27.81	25.16
J63A-1A2-021-121-TH/DZ	20.32	17.65	15	J63A-1A2-051-121-TH/DZ	39.37	36.7	34.05

Printed circuit board package size (for reference only)

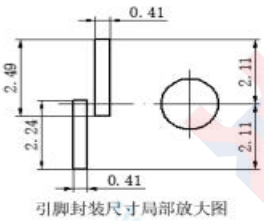

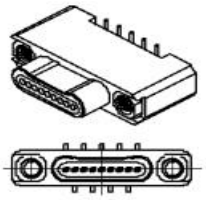

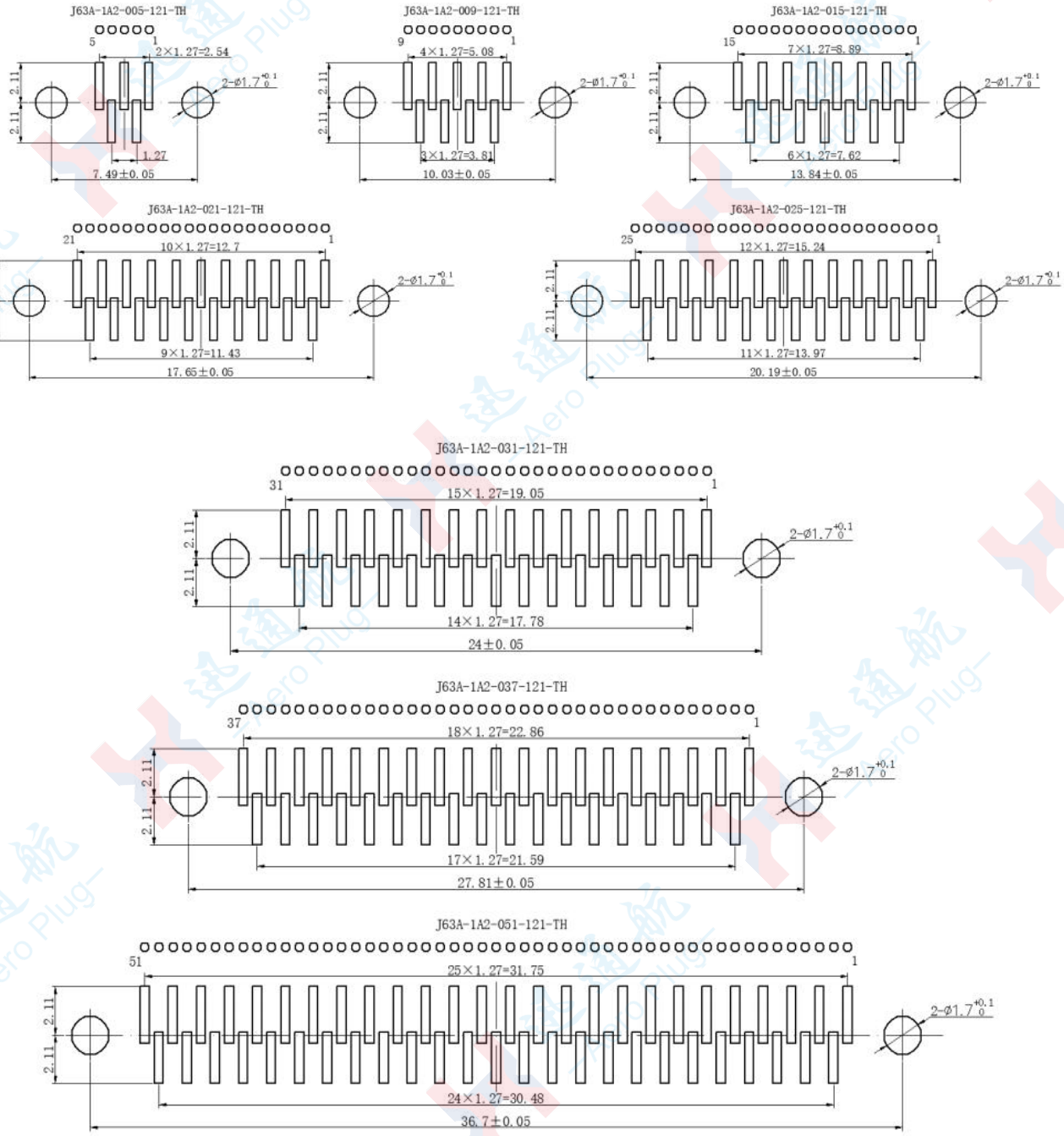

J63A vertical surface mount socket

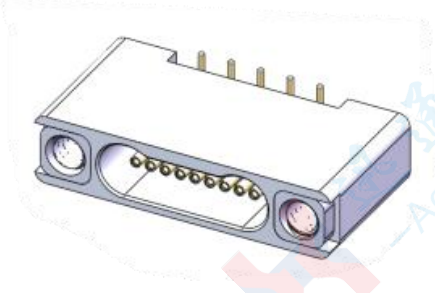

J63A-1B2-009-221-TH

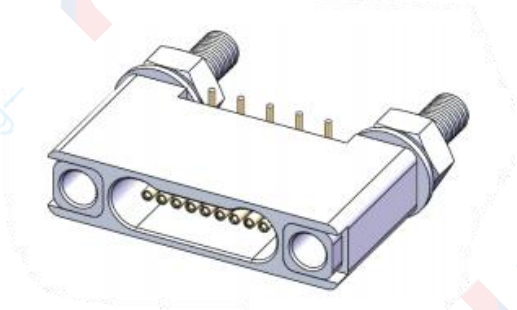

J63A-1B2-009-221-NH

J63A - 1 B 2 - 009 - 22 1 - TH/NH

- J63A: Main code name
- 1: Single-row contact piece
- B: Vertical surface mount socket
- 2: The aluminum shell is nickel-plated
- 009: Number of contact pieces
- 22: Vertical surface-mounted jack
- 1: Gold plating of contact pieces
- TH/NH: Connecting nut/nut installation guide sleeve

Product features:

The product is welded and used using SMT technology.
Connect J63A-1B2-009-221-TH to the plug with a locking screw. J63A-1B2-009-221-NH Connect with the plug with a guide column;
The pins are soft and prone to deformation. They need to be protected when in use.

The overall dimensions of this series:

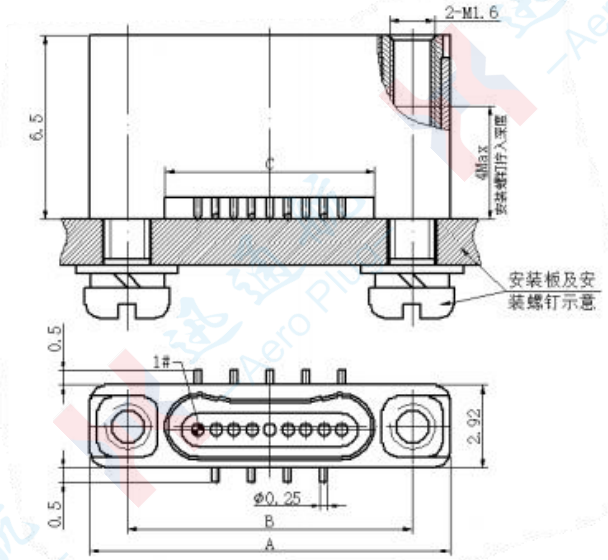

J63A-1B2-009-221-TH

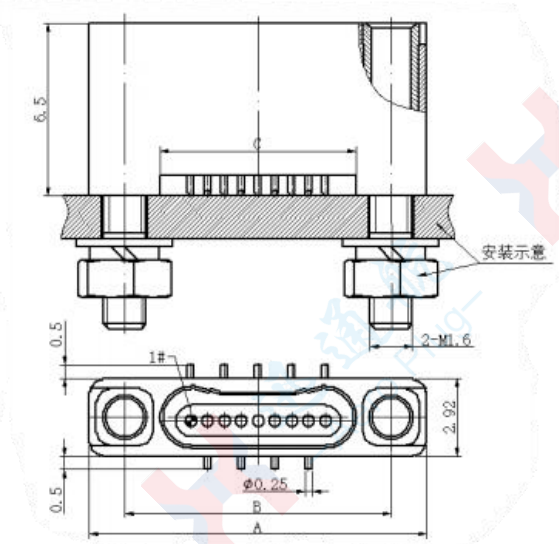

J63A-1B2-009-221-NH

Model specification	A	B	C	Model specification	A	B	C
J63A-1B2-005-221-TH/DZ	10.16	7.49	4.84	J63A-1B2-025-221-TH/DZ	22.86	20.19	17.54
J63A-1B2-009-221-TH/DZ	12.7	10.03	7.38	J63A-1B2-031-221-TH/DZ	26.67	24	21.35
J63A-1B2-015-221-TH/DZ	16.51	13.84	11.19	J63A-1B2-037-221-TH/DZ	30.48	27.81	25.16
63A-1B2-021-221-TH/DZ	20.32	17.65	15	J63A-1B2-051-221-TH/DZ	39.37	36.7	34.05

Printed circuit board package size (for reference only)

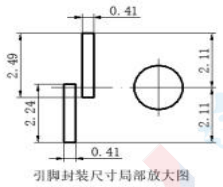

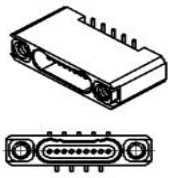

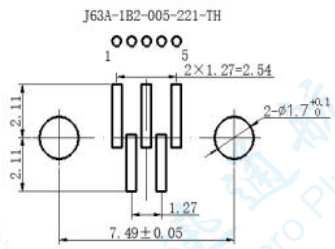

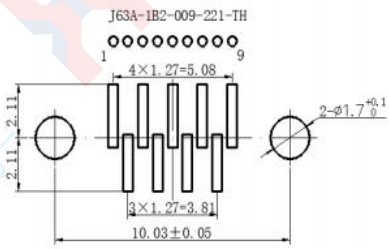

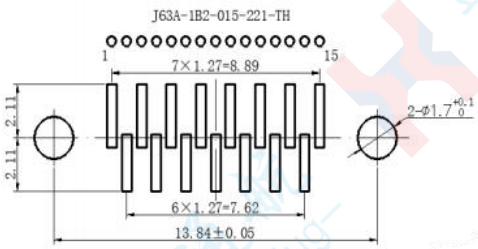

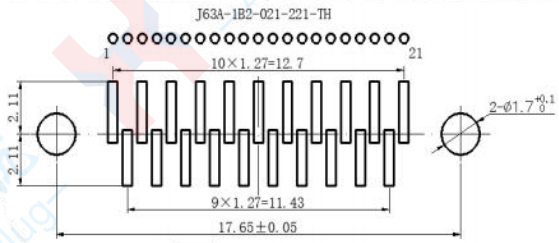

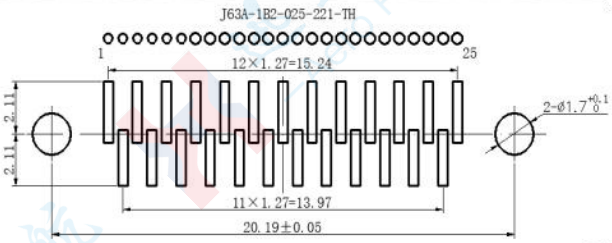

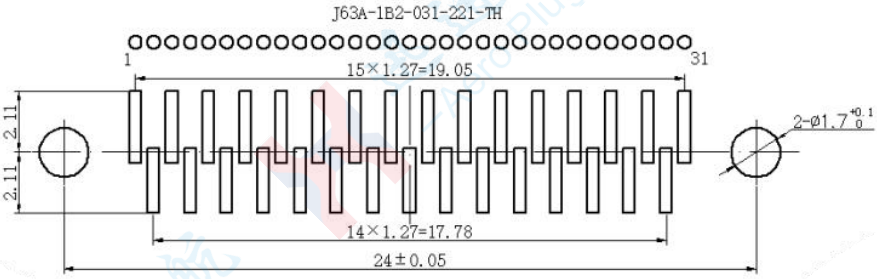

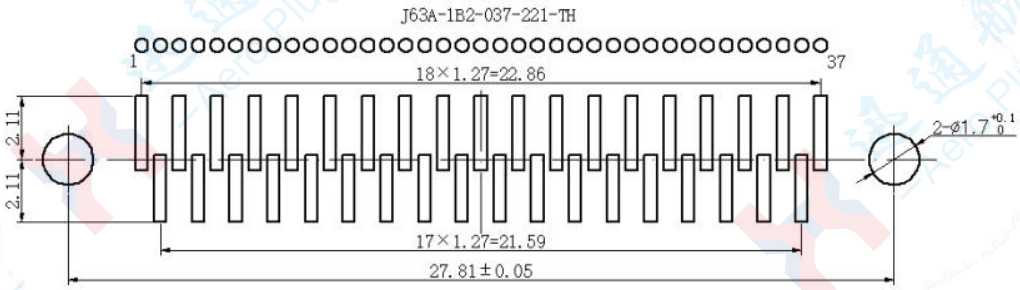

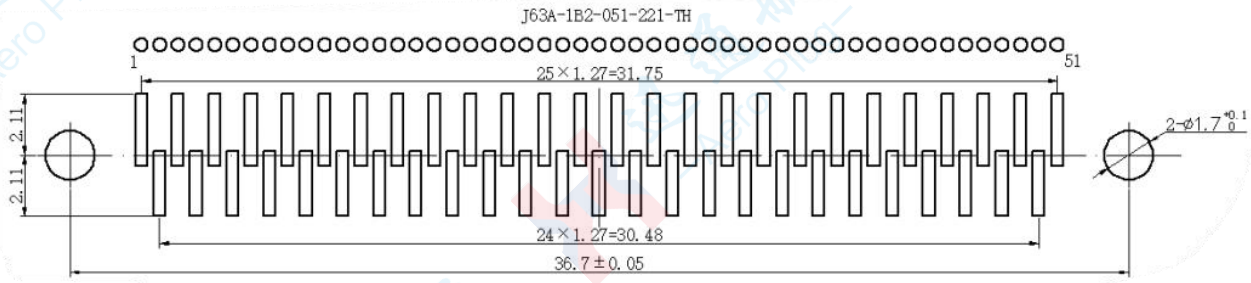

J63A horizontal surface mount plug

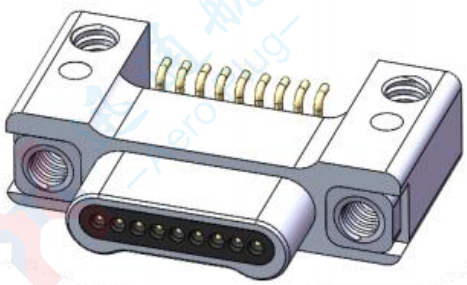

J63A - 1 C 2 - 009 - 12 1 - TH

- J63A: Main code name
- 1: Single-row contact piece
- C: Horizontal Surface Mount Plug
- 2: The aluminum shell is nickel-plated
- 009: Number of contact pieces
- 12: Horizontal surface mount type pins
- 1: Gold plating of contact pieces
- TH: Connecting nut

Product features:

The product is welded and used using SMT technology.

Generally, sockets with locking screws are used for connection.

The pins are soft and prone to deformation. They need to be protected when in use.

The overall dimensions of this series:

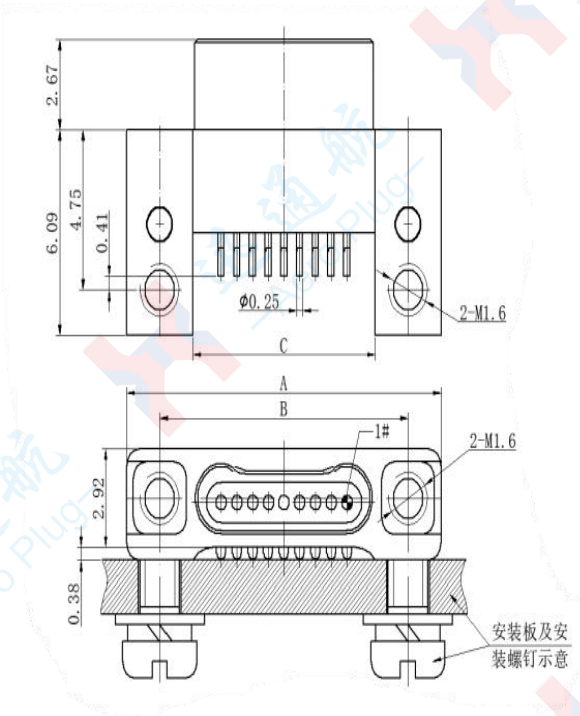

Specification and model	size		
	A	B	C
J63A-1C2-005-121-TH	10.16	7.49	4.84
J63A-1C2-009-121-TH	12.7	10.03	7.38
J63A-1C2-015-121-TH	16.51	13.84	11.19
J63A-1C2-021-121-TH	20.32	17.65	15
J63A-1C2-025-121-TH	22.86	20.19	17.54
J63A-1C2-031-121-TH	26.67	24	21.35
J63A-1C2-037-121-TH	30.48	27.81	25.16
J63A-1C2-051-121-TH	39.37	36.7	34.05

Printed circuit board package size (for reference only.)

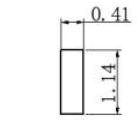

引脚封装尺寸局部放大图

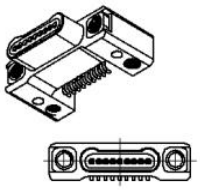

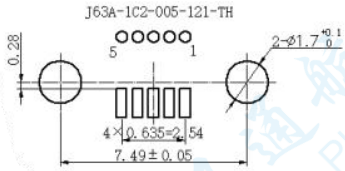

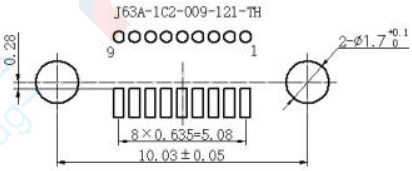

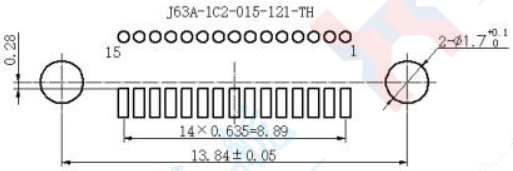

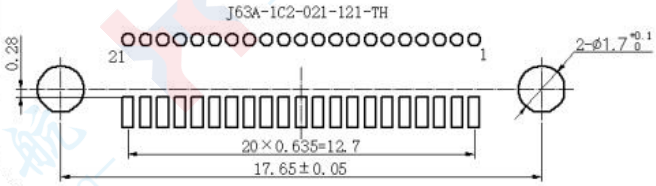

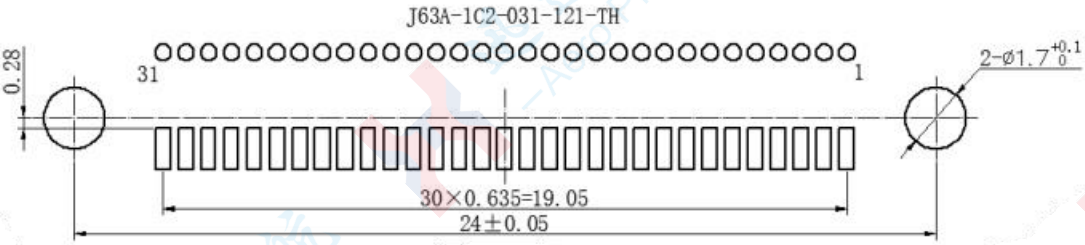

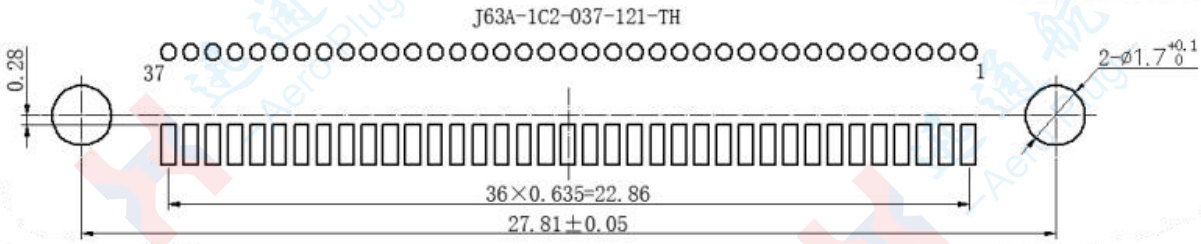

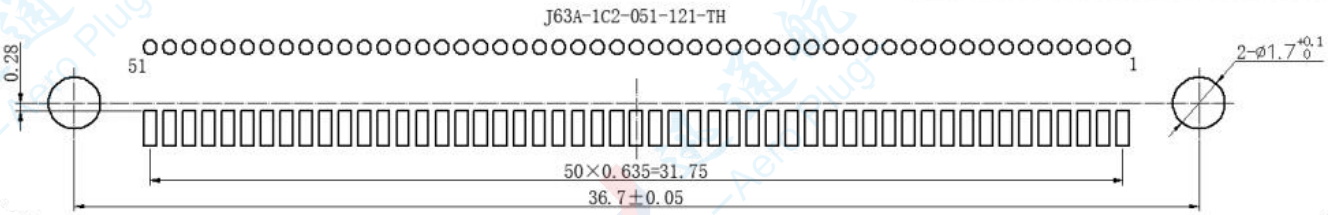

J63A Horizontal Surface Mount Socket

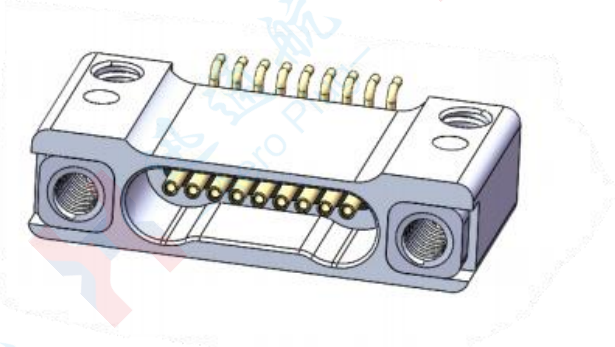

J63A - 1 D 2 - 009 - 22 1 - TH

- J63A: Main code name
- 1: Single-row contact piece
- D: Horizontal surface mount socket
- 2: The aluminum shell is nickel-plated
- 009: Number of contact pieces
- 22: Horizontal surface-mounted jack
- 1: Gold plating of contact pieces
- TH: Connecting nut

Product features:

The product is welded and used using SMT technology.
Generally, plugs with locking screws are used for connection.
The pins are soft and prone to deformation. They need to be protected when in use.

The overall dimensions of this series:

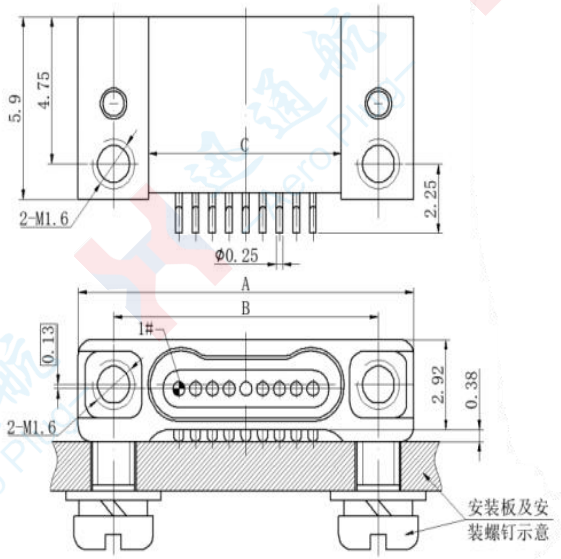

Specification and model	size		
	A	B	C
J63A-1D2-005-221-TH	10.16	7.49	4.84
J63A-1D2-009-221-TH	12.7	10.03	7.38
J63A-1D2-015-221-TH	16.51	13.84	11.19
J63A-1D2-021-221-TH	20.32	17.65	15
J63A-1D2-025-221-TH	22.86	20.19	17.54
J63A-1D2-031-221-TH	26.67	24	21.35
J63A-1D2-037-221-TH	30.48	27.81	25.16
J63A-1D2-051-221-TH	39.37	36.7	34.05

Printed circuit board package size (for reference only)

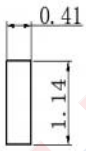

引脚封装尺寸局部放大图

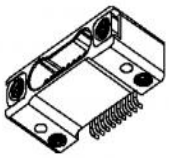

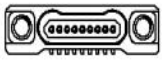

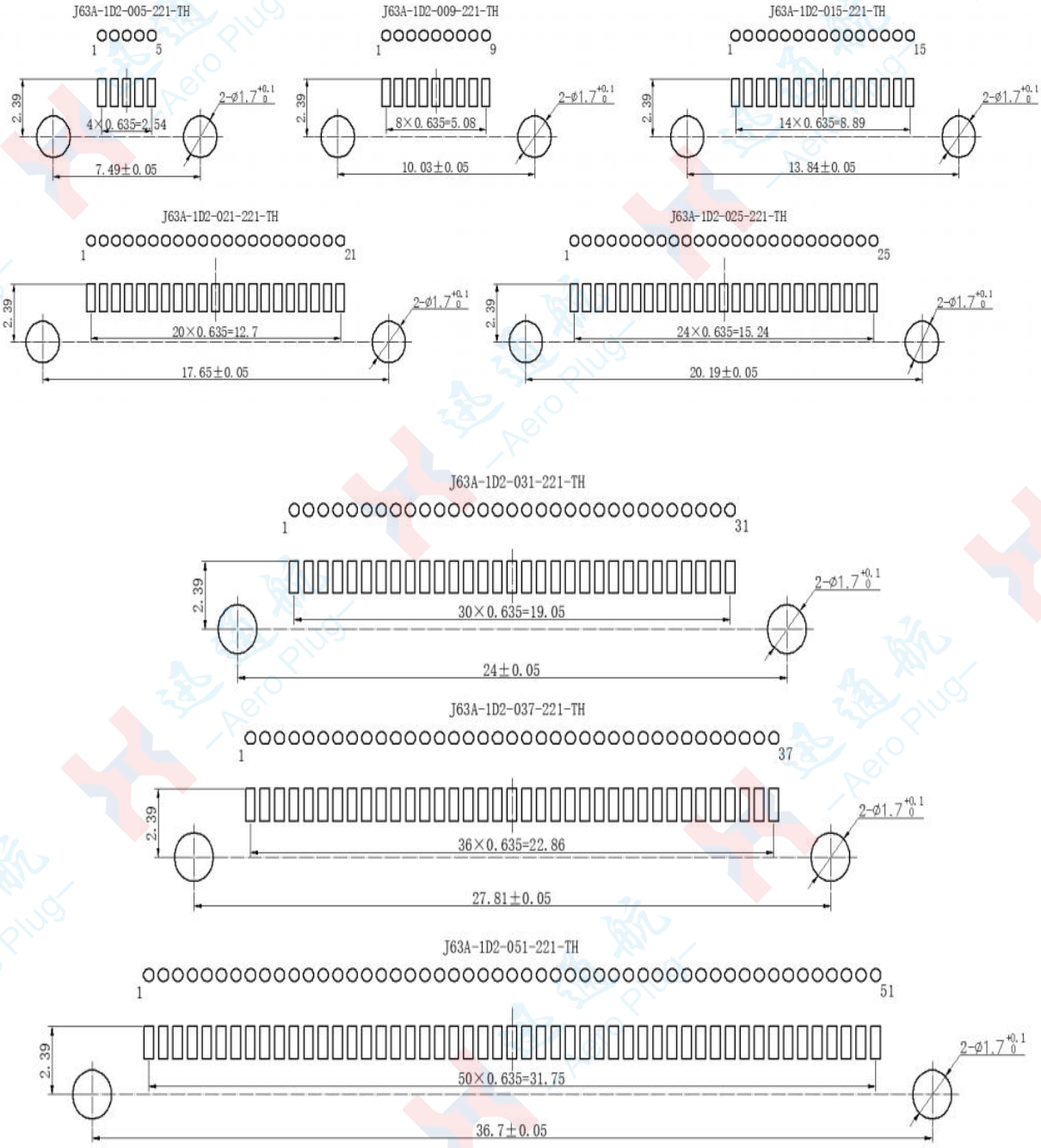

J63A Right-angle Through-Hole PCB Plug

J63A-1E2-009-321-TH

J63A-1E2-009-321-DZ

J63A - 1 E 2 - 009 - 32 1 - TH/DZ

- J63A: Main code name
- 1: Single-row contact piece
- E: Right-angle Through-Hole PCB Plug
- 2: The aluminum shell is nickel-plated
- 009: Number of contact pieces
- 32: Bent plug-in printed circuit board type pins: 32- Pin length 2.77; 33- Pin length 3.56; 34- Pin length 4.37
- 1: Gold plating of contact pieces
- TH/DZ: Connecting nut/guide column

Product features:

The connector offers three types of pin lengths. If other lengths are required, customization is necessary.

J63A-1E2-009-321-TH is connected to the socket with a locking screw. Connect J63A-1E2-009-321-DZ to the socket with a guide sleeve.

The overall dimensions of this series:

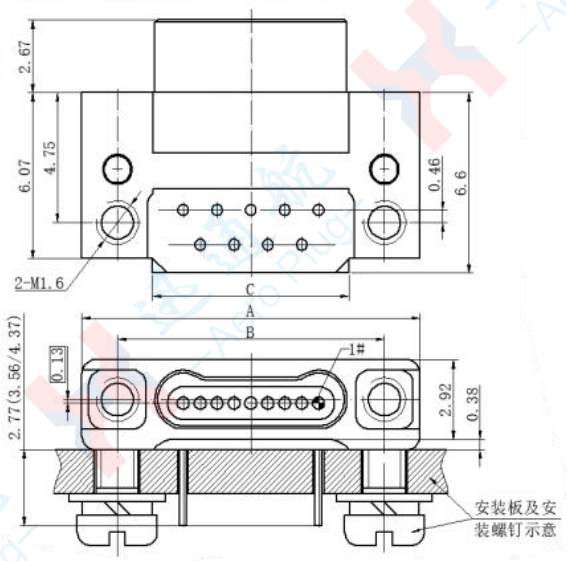

J63A-1E2-009-321-TH

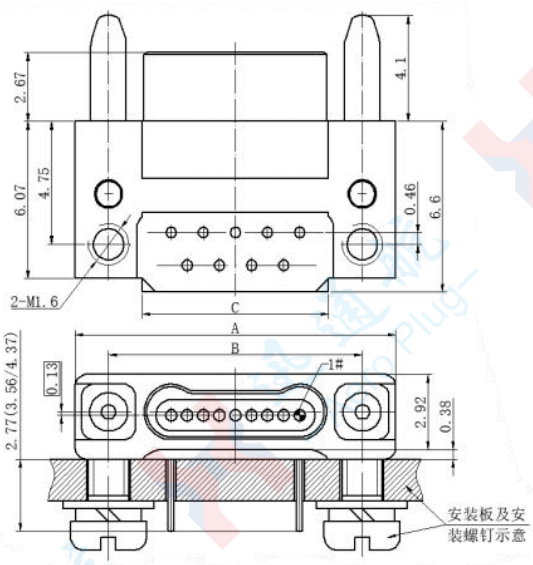

J63A-1E2-009-321-DZ

Model specification	A	B	C	Model specification	A	B	C
J63A-1E2-005-321-TH/DZ	10.16	7.49	4.84	J63A-1E2-025-321-TH/DZ	22.86	20.19	17.54
J63A-1E2-009-321-TH/DZ	12.7	10.03	7.38	J63A-1E2-031-321-TH/DZ	26.67	24	21.35
J63A-1E2-015-321-TH/DZ	16.51	13.84	11.19	J63A-1E2-037-321-TH/DZ	30.48	27.81	25.16
J63A-1E2-021-321-TH/DZ	20.32	17.65	15	J63A-1E2-051-321-TH/DZ	39.37	36.7	34.05

Printed circuit board package size (for reference only)

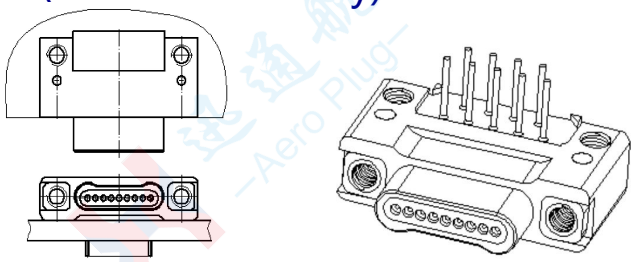

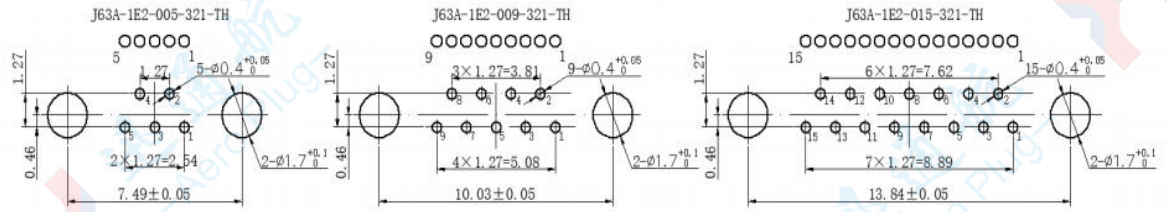

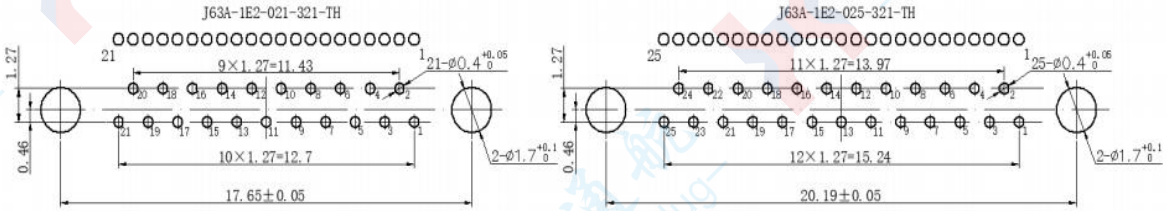

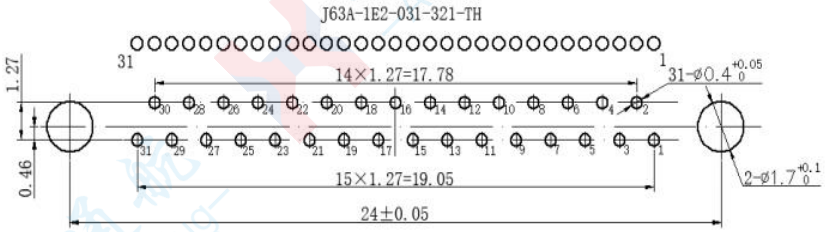

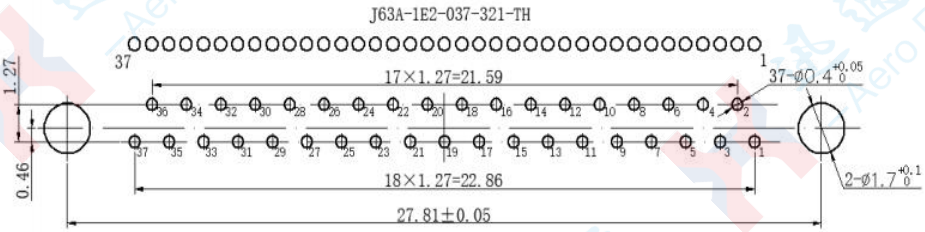

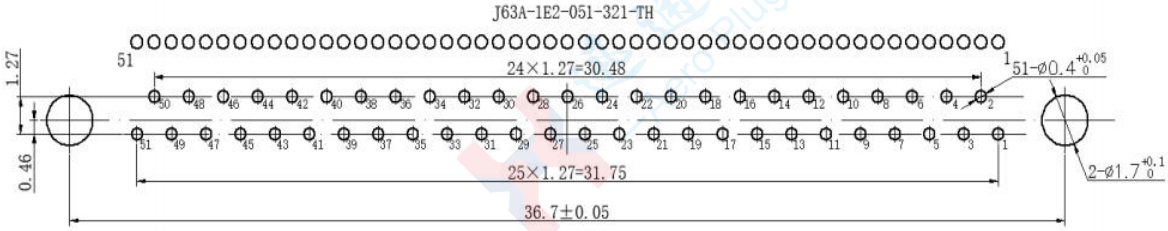

J63A Right-angle Through-Hole PCB Plug with Locking Screws

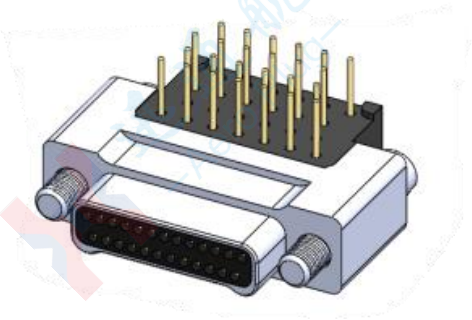

J63A - 1 E 2 - 009 - 32 1 - JC

- J63A: Main code name
- 1: Single-row contact piece
- E: Right-angle Through-Hole PCB Plug
- 2: The aluminum shell is nickel-plated
- 009: Number of contact pieces
- 32: Bent plug-in printed circuit board type pins: 32- Pin length 2.77; 33- Pin length 3.56; 34- Pin length 4.37
- 1: Gold plating of contact pieces
- JC: Locking screw

Product features:

The connector offers three types of pin lengths. If other lengths are required, customization is necessary.

This model is the free end and is not installed. It is generally connected to a socket with a connecting nut. The lock screw (JC) with a flat-head slot can be tightened with a small flat-head screwdriver.

The overall dimensions of this series:

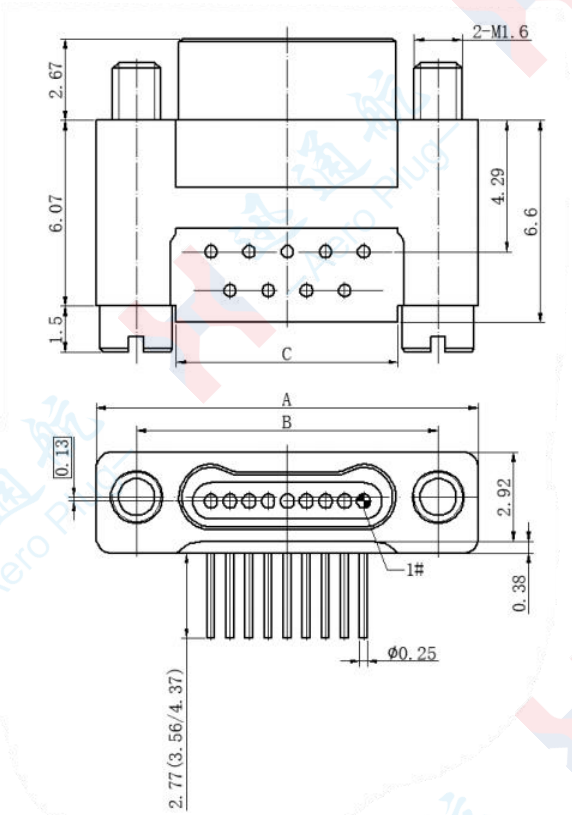

Specification and model	size		
	A	B	C
J63A-1E2-005-321-JC	10.16	7.49	4.84
J63A-1E2-009-321-JC	12.7	10.03	7.38
J63A-1E2-015-321-JC	16.51	13.84	11.19
J63A-1E2-021-321-JC	20.32	17.65	15
J63A-1E2-025-321-JC	22.86	20.19	17.54
J63A-1E2-031-321-JC	26.67	24	21.35
J63A-1E2-037-321-JC	30.48	27.81	25.16
J63A-1E2-051-321-JC	39.37	36.7	34.05

Printed circuit board package size (for reference only)

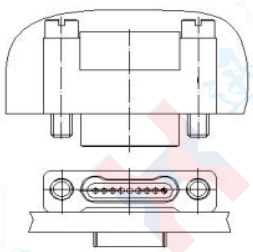

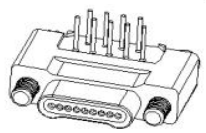

J63A-1E2-005-321-JC

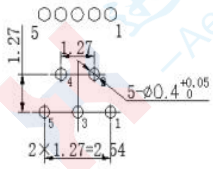

J63A-1E2-009-321-JC

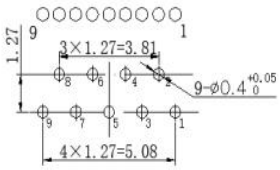

J63A-1E2-015-321-JC

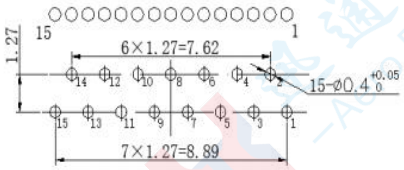

J63A-1E2-021-321-JC

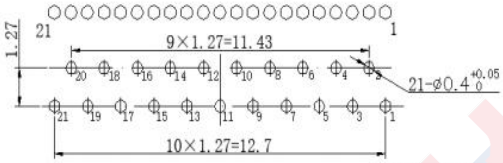

J63A-1E2-025-321-JC

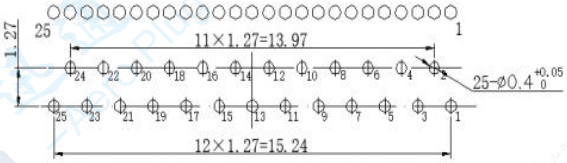

J63A-1E2-031-321-JC

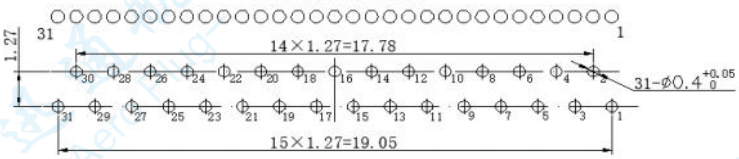

J63A-1E2-037-321-JC

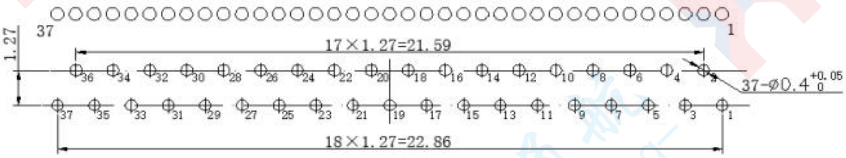

J63A-1E2-051-321-JC

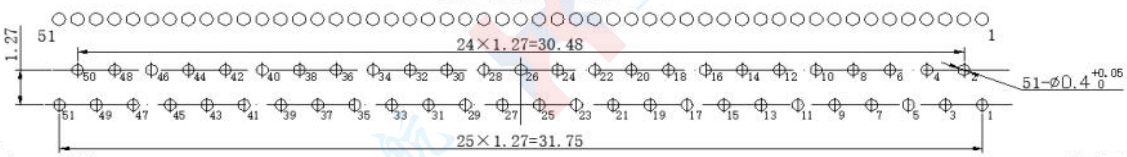

J63A Right-angle Through-Hole PCB Socket

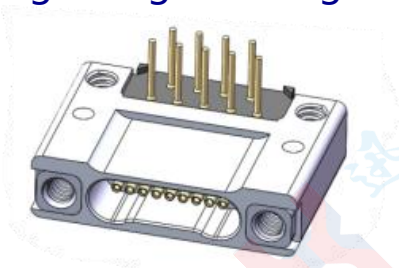

J63A-1F2-009-431-TH

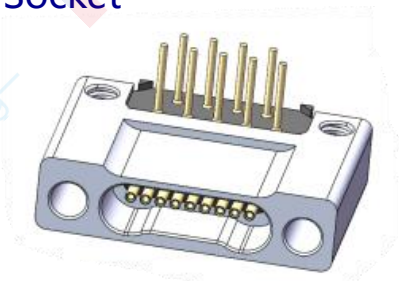

J63A-1F2-009-431-DK

J63A - 1 F 2 - 009 - 43 1 - TH/DK

- J63A: Main code name
- 1: Single-row contact piece
- F: Right-angle Through-Hole PCB Socket
- 2: The aluminum shell is nickel-plated
- 009: Number of contact pieces
- 43: Bent plug-in printed circuit board type jack: 43- pin length 2.77; 44- Pin length 3.56; 45- Pin length 4.37
- 1: Gold plating of contact pieces
- TH/DK: Connecting nut/guide hole

Product features:

The connector offers three types of pin lengths. If other lengths are required, customization is necessary.
Connect J63A-1F2-009-431-TH to the plug with a locking screw. Connect J63A-2F2-009-431-DK to the plug with a guide column.

The overall dimensions of this series:

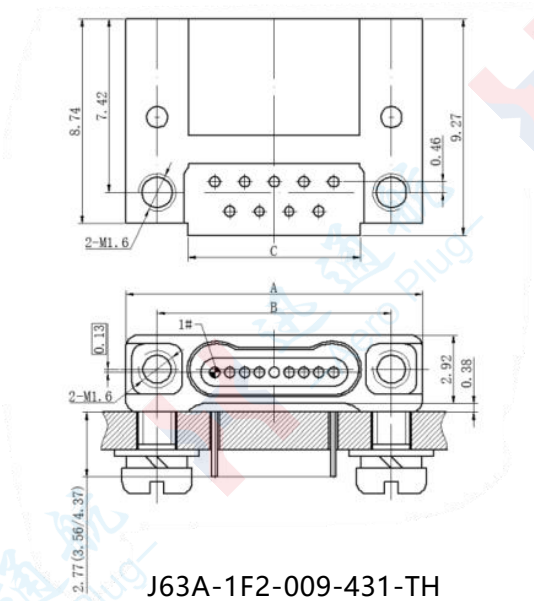

J63A-1F2-009-431-TH

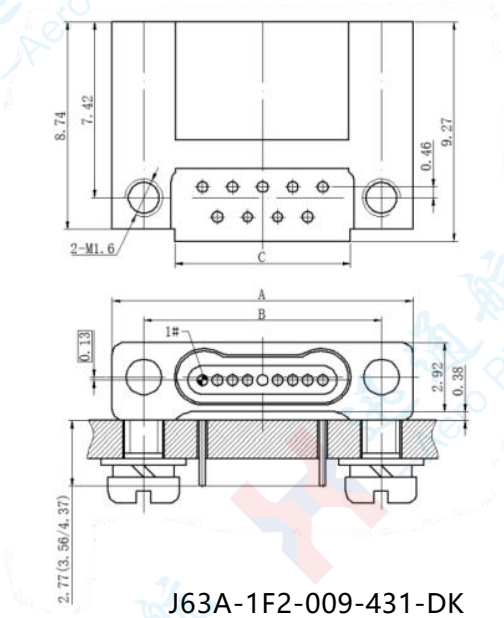

J63A-1F2-009-431-DK

Model specification	A	B	C	Model specification	A	B	C
J63A-1F2-005-431-TH/DK	10.16	7.49	4.84	J63A-1F2-025-431-TH/DK	22.86	20.19	17.54
J63A-1F2-009-431-TH/DK	12.7	10.03	7.38	J63A-1F2-031-431-TH/DK	26.67	24	21.35
J63A-1F2-015-431-TH/DK	16.51	13.84	11.19	J63A-1F2-037-431-TH/DK	30.48	27.81	25.16
J63A-1F2-021-431-TH/DK	20.32	17.65	15	J63A-1F2-051-431-TH/DK	39.37	36.7	34.05

Printed circuit board package size (for reference only.)

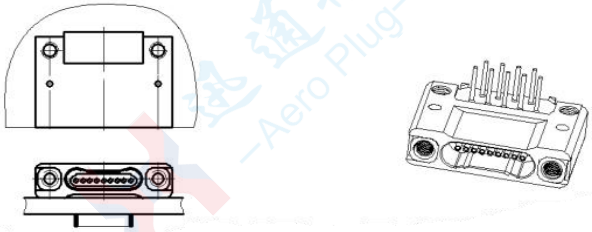

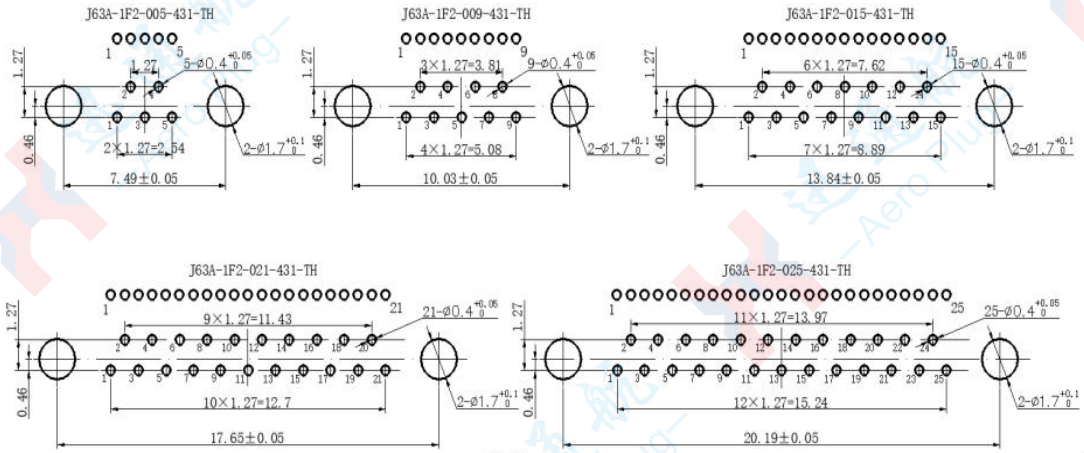

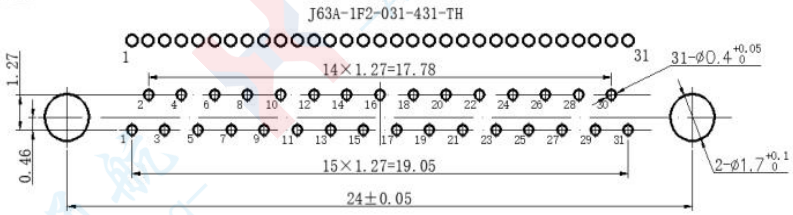

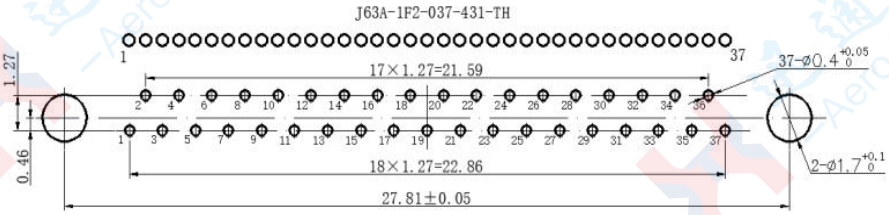

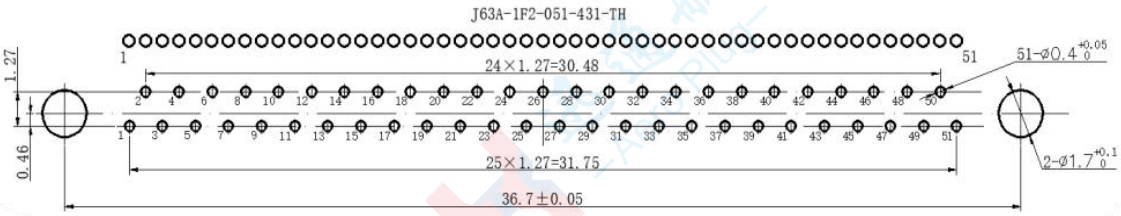

J63A through-hole printed circuit board plug

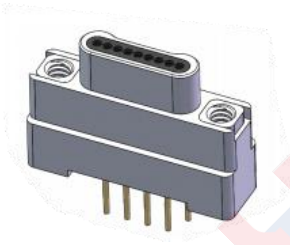

J63A-1G2-009-131-TH

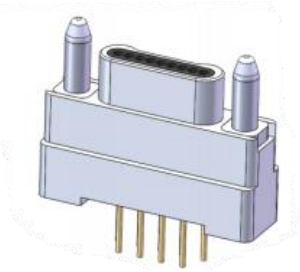

J63A-1G2-009-131-DZ

J63A - 1 G 2 - 009 - 13 1 - TH/DZ

- J63A: Main code name
- 1: Single-row contact piece
- G: Through-hole printed circuit board plug
- 2: The aluminum shell is nickel-plated
- 009: Number of contact pieces
- 13: Through-hole printed circuit board type pins: 13- Pin length 2.77; 14- Pin length 3.56; 15- Pin length 4.37
- 1: Gold plating of contact pieces
- TH/DZ: Connecting nut/guide column

Product features:

The connector offers three types of pin lengths. If other lengths are required, customization is necessary.
J63A-1G2-009-131-TH is connected to the socket with a locking screw.
The J63A-1G2-009-131-DK is connected to the socket with a guide sleeve.

The overall dimensions of this series:

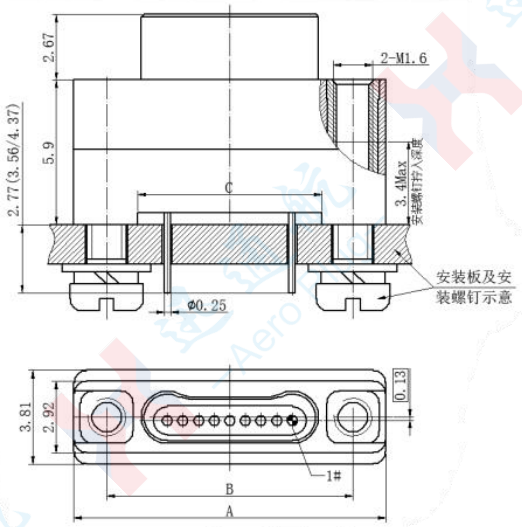

J63A-1G2-009-131-TH

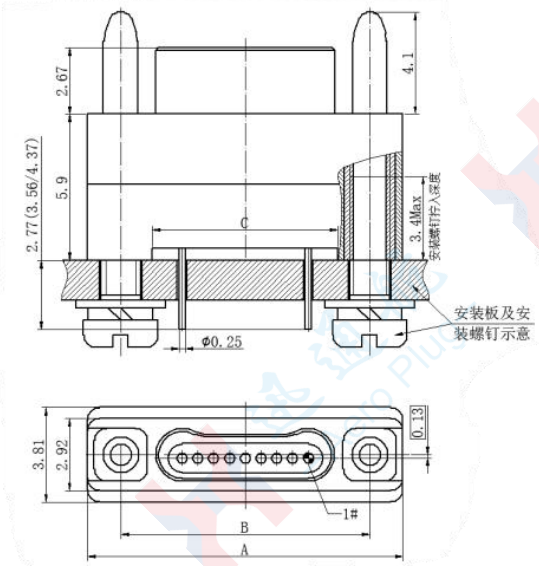

J63A-1G2-009-131-DZ

Model specification	A	B	C	Model specification	A	B	C
J63A-1G2-005-131-TH/DZ	10.16	7.49	4.84	J63A-1G2-025-131-TH/DZ	22.86	20.19	17.54
J63A-1G2-009-131-TH/DZ	12.7	10.03	7.38	J63A-1G2-031-131-TH/DZ	26.67	24	21.35
J63A-1G2-015-131-TH/DZ	16.51	13.84	11.19	J63A-1G2-037-131-TH/DZ	30.48	27.81	25.16
J63A-1G2-021-131-TH/DZ	20.32	17.65	15	J63A-1G2-051-131-TH/DZ	39.37	36.7	34.05

Printed circuit board package size
(for reference only.)

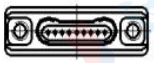

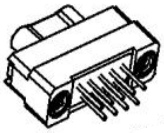

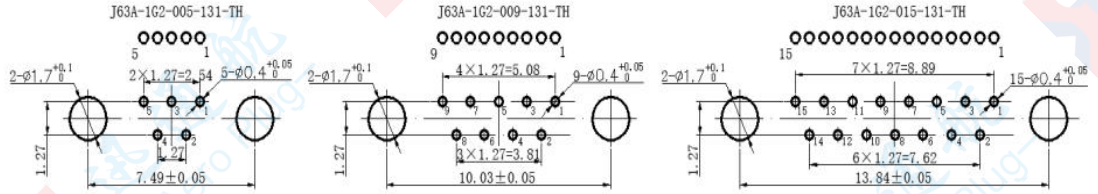

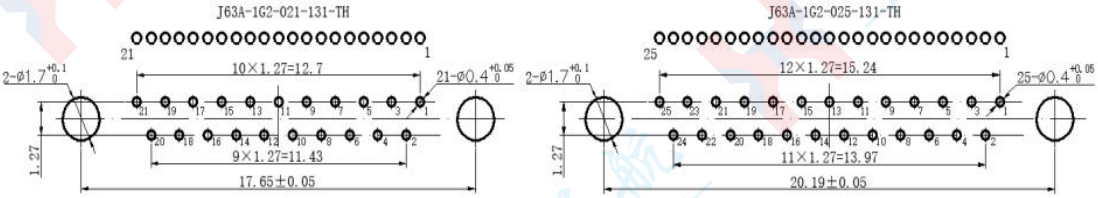

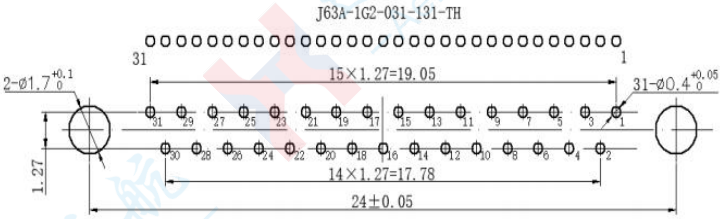

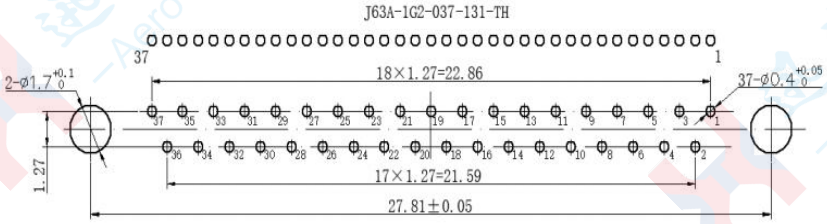

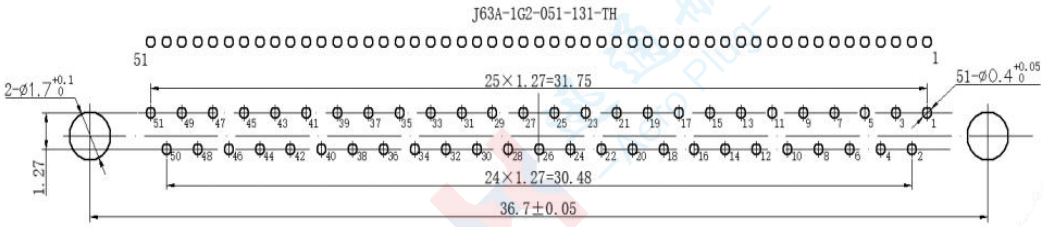

J63A through-hole printed circuit board socket

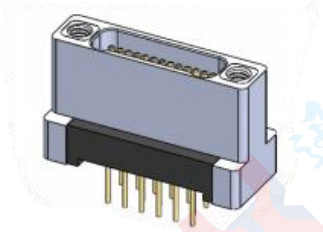

J63A-1H2-009-231-TH

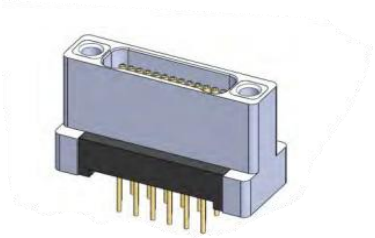

J63A-1H2-009-231-DK

J63A - 1 H 2 - 009 - 13 1 - TH/DK

- J63A: Main code name
- 1: Single-row contact piece
- H: Through-hole printed circuit board socket
- 2: The aluminum shell is nickel-plated
- 009: Number of contact pieces
- 13: Through-hole printed circuit board type jack: 23- Pin length 2.77; Pin length 24- 3.56; Pin length 25- 4.37
- 1: Gold plating of contact pieces
- TH/DK: Connecting nut/guide hole

Product features:

The connector offers three types of pin lengths. If other lengths are required, customization is necessary.
Connect J63A-1H2-009-231-TH to the plug with a locking screw.
The J63A-1H2-009-231-DK is connected to the plug with a guide column。

Series external dimensions:

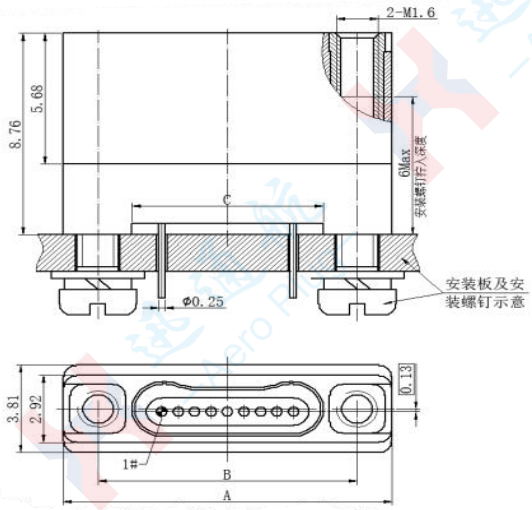

J63A-1H2-009-321-TH

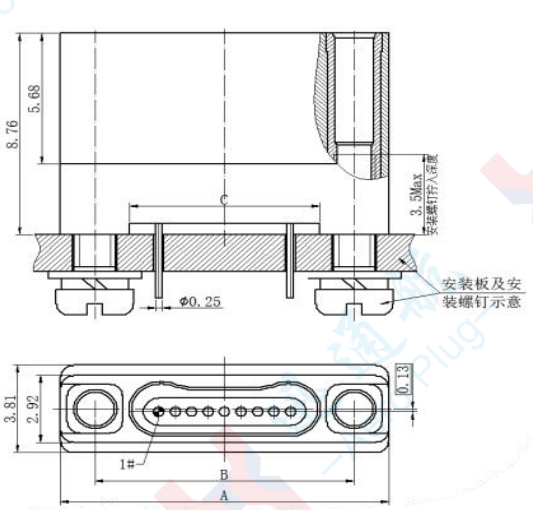

J63A-1H2-009-321-DK

Model specification	A	B	C	Model specification	A	B	C
J63A-1H2-005-131-TH/DK	10.16	7.49	4.84	J63A-1H2-025-131-TH/DK	22.86	20.19	17.54
J63A-1H2-009-131-TH/DK	12.7	10.03	7.38	J63A-1H2-031-131-TH/DK	26.67	24	21.35
J63A-1H2-015-131-TH/DK	16.51	13.84	11.19	J63A-1H2-037-131-TH/DK	30.48	27.81	25.16
J63A-1H2-021-131-TH/DK	20.32	17.65	15	J63A-1H2-051-131-TH/DK	39.37	36.7	34.05

Printed circuit board package size (for reference only)

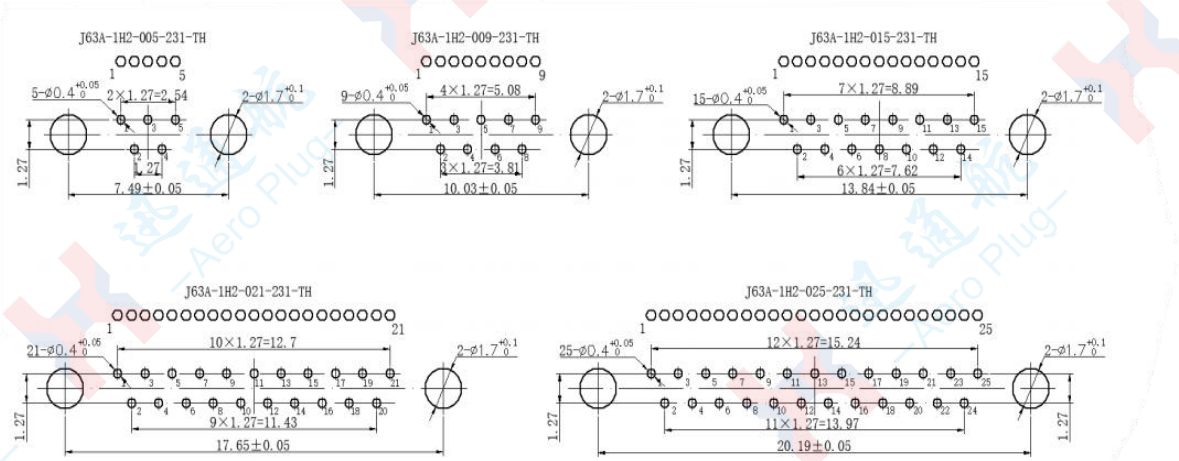

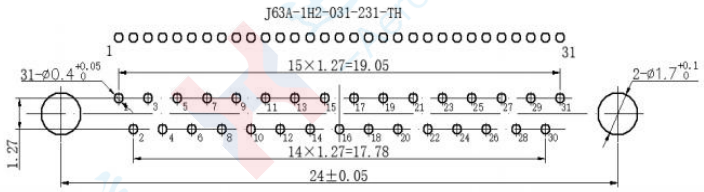

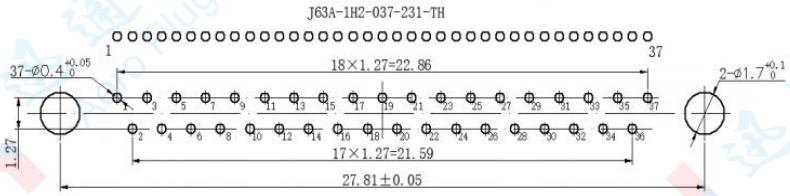

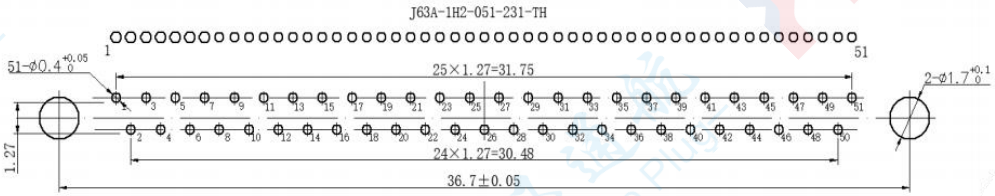

J30J micro rectangular electrical connector

Product features

- There are ten specifications available: 9, 15, 21, 25, 31, 37, 51, 66, 74, and 100 pins
- The plug uses twisted pins. Product features: high density, miniaturization, and high reliability
- Suitable wire cross-sectional area $0.1mm^2 \sim 0.15mm^2$
- The product performance meets the requirements of GJB2446 and is equivalent to the U.S. military standard MIL-DTL-83513.
- Executive Standard: Detailed Specification for J30J Series Micro-Rectangular Electrical Connectors

Technical Characteristics

- Ambient temperature: -55℃ ~ +125℃
- Vibration: 10Hz ~ 2000Hz 196m/s²
- Random Vibration: Power Spectral Density (PSD) 0.4 G²/Hz, Total Acceleration Root Mean Square (RMS) Value 23.1 G
- Shock: 735m/s² 11ms
- Rated Current: 3A
- Contact Resistance: ≤ 10mΩ
- Insulation Resistance: ≥ 5000MΩ
- Dielectric Withstand Voltage: 800V
- Mechanical Life: 500 Cycles

Spectrum Arrangement

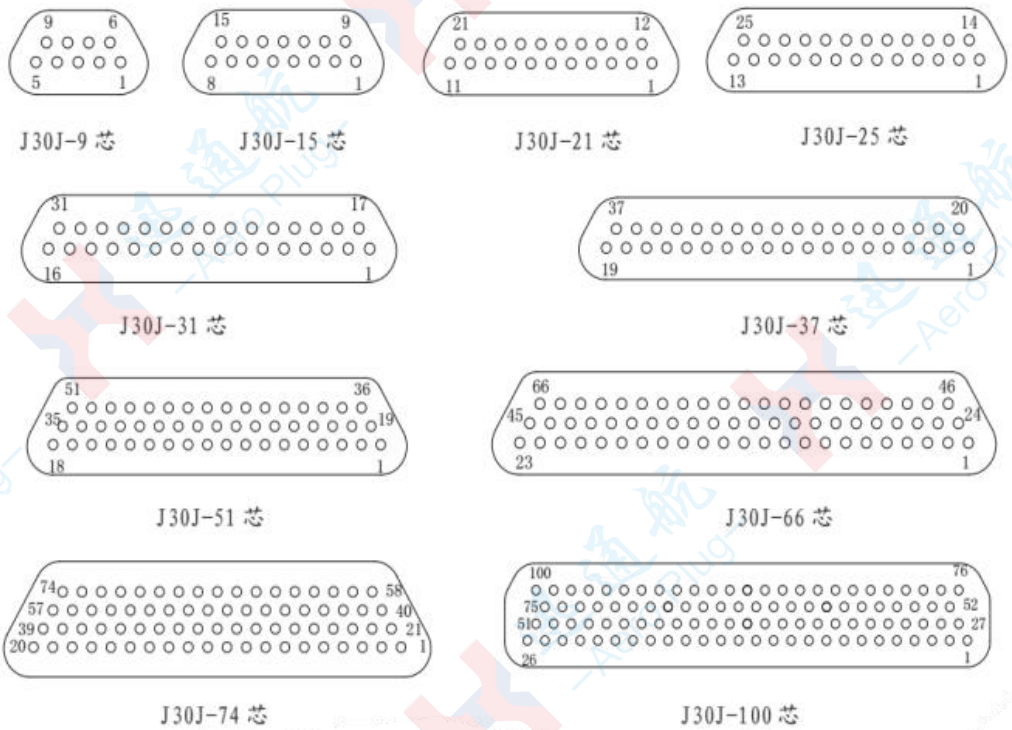

Note: Viewed from the mating end of the plug.

Model naming

J30J X - X TJ/ZK X X - X
① ② ③ ④ ⑤ ⑥ ⑦

①Main name code:

②Series modification: No indication for aluminum housing and electroless nickel plating
A- Snap-lock type
D- Mounting holes modified to M2 - 6H
M- Rubber seal
S- Stainless steel
R- Plugs are equipped with sockets and sockets with pins

③ Number of contact pieces: 9、15、21、25、31、37、51、66、74、100

④ Types of contact pieces: TJ - The plug is equipped with pins
ZK - The socket is equipped with sockets
TJ and ZK are fixed combinations

⑤ Tail end form: No letters - crimping
S - Welding
N - Through-hole printed circuit board
W - Bendable printed circuit board

⑥ Locking component: Select from the J30J locking component

⑦ Basic modification: A -The tail end of the shell is equipped with a shielded network cable clamp
D-It can prevent the installation screw from rotating
Q-The flange of the shell is widened (as per the user's requirements)
J-The grid spacing of the printed circuit board is 1.27×2.54 (columns × rows).

Note: If it is not convenient to indicate in the naming of this model, it should be specified in the order contract or agreement.

Product family tree chart

The J30J product family tree can be listed separately by plug (socket) assembly family tree, locking assembly family tree, wire clamp assembly family tree, and plug (socket) family tree, as detailed below:

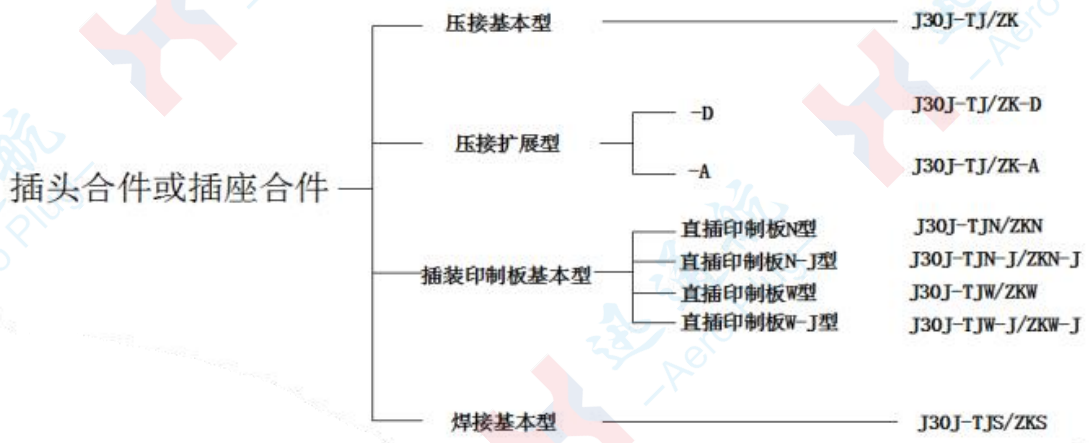

J30J crimping basic type \J30J-TJ&J30J-ZK.

Plug

J30J-9、15、21、25、31、37、51、66、74、100TJ

Product 3D View

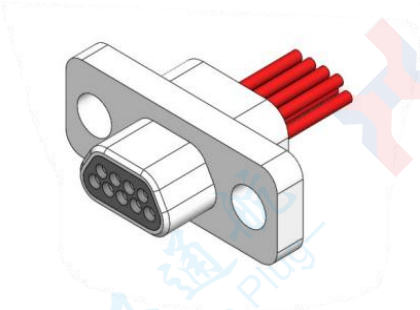

J30J-9TJ

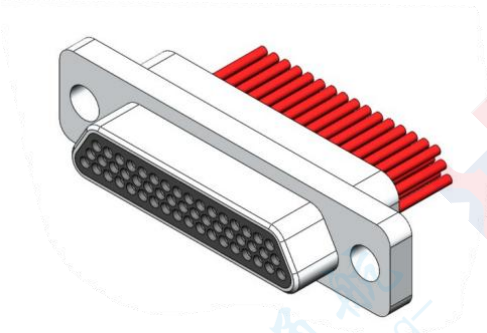

J30J-51TJ

Socket

J30J-9、15、21、25、31、37、51、66、74、100ZK

Product 3D View

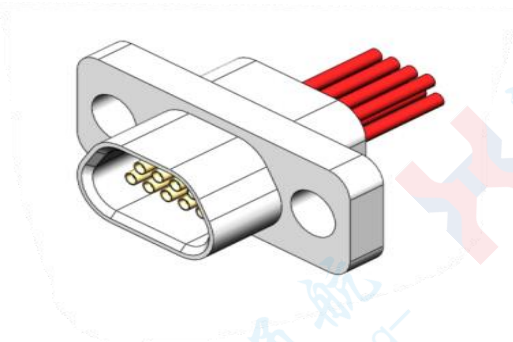

J30J-9ZK

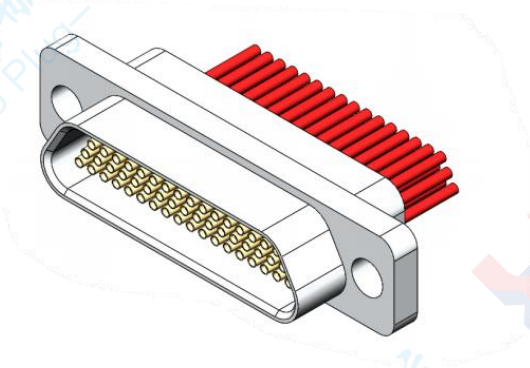

J30J-51ZK

Product external dimension drawing

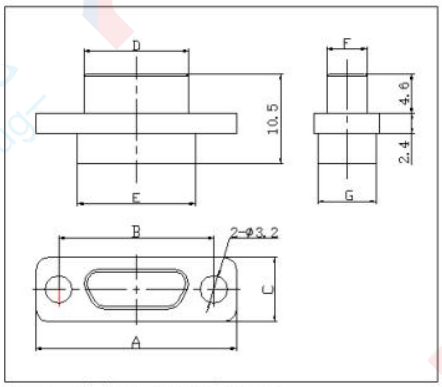

J30J-□TJ

Product external dimension drawing

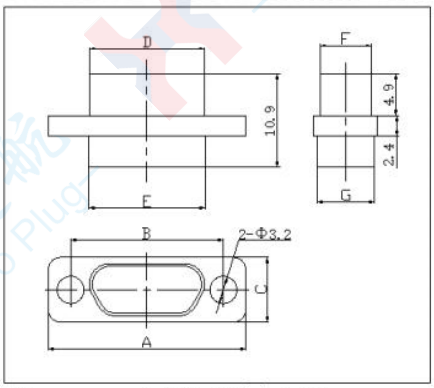

J30J-□ZK

J30J crimping basic type \J30J-TJ&J30J-ZK

Order mark	A	B	C	D	E	F	G
J30J-9TJ	19.6	14.3	7.6	8.3	9.9	4.7	6.8
J30J-15TJ	23.5	18.2	7.6	12.3	13.8	4.7	6.8
J30J-21TJ	27.4	22	7.6	16	17.6	4.7	6.8
J30J-25TJ	29.8	24.5	7.6	18.6	20.2	4.7	6.8
J30J-31TJ	33.6	28.3	7.6	22.4	24	4.7	6.8
J30J-37TJ	37.4	32.2	7.6	26.3	27.8	4.7	6.8
J30J-51TJ	36.4	30.86	8.7	25	26.6	5.8	7.9
J30J-66TJ	42.9	37.3	8.7	31.4	33	5.8	7.9
J30J-74TJ	38.8	33.5	9.7	27.5	29.1	6.8	9.1
J30J-100TJ	54.7	45.7	9.7	35	36.6	6.8	9.1
J30J-9ZK	19.6	14.3	7.6	9.8	9.9	6.1	6.8
J30J-15ZK	23.5	18.2	7.6	13.7	13.8	6.1	6.8
J30J-21ZK	27.4	22	7.6	17.4	17.6	6.1	6.8
J30J-25ZK	29.8	24.5	7.6	20	20.2	6.1	6.8
J30J-31ZK	33.6	28.3	7.6	23.8	24	6.1	6.8
J30J-37ZK	37.4	32.2	7.6	27.7	27.8	6.1	6.8
J30J-51ZK	36.4	30.86	8.7	26.5	26.6	7.2	7.9
J30J-66ZK	42.9	37.3	8.7	32.9	33	7.2	7.9
J30J-74ZK	38.8	33.5	9.7	29	29.1	8.3	9.1
J30J-100ZK	54.7	45.7	9.7	36.6	36.65	8.2	9.1

The external dimensions of the products after docking

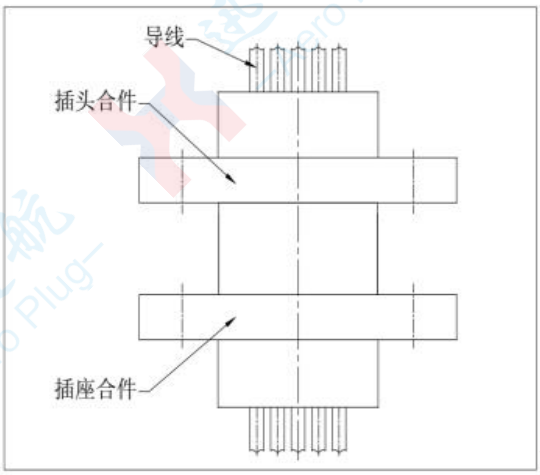

front View

The external dimensions of the products after docking

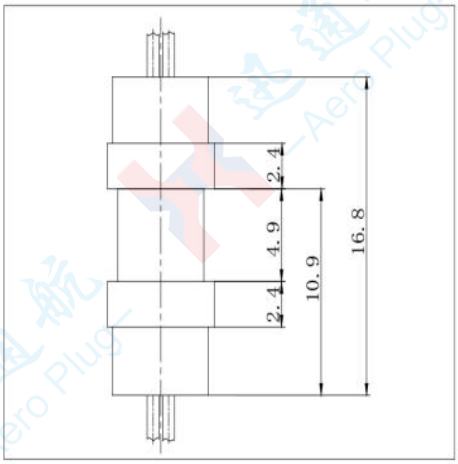

Left View

J30J-TJ-C&J30J-ZK-C
Crimp-type products where the lead-out direction of the tail wires is perpendicular to the mating direction of the product

Plug
J30J-9、15、21、25、31、37、51、66、74、100TJ-C
Product Stereogram

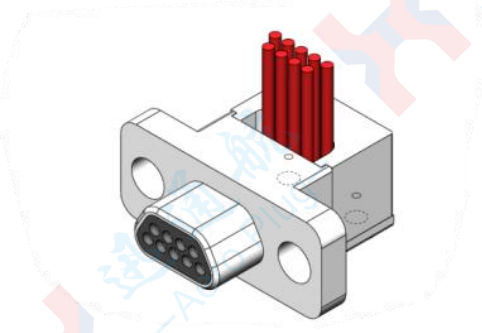
J30J-9TJ-C

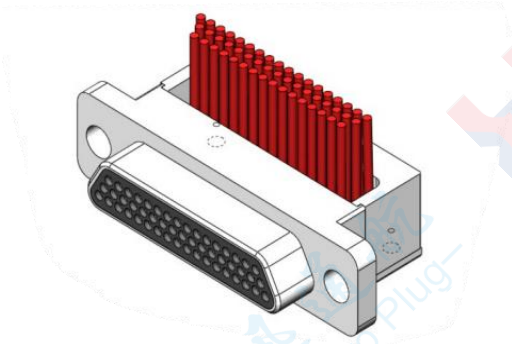
J30J-51TJ-C

Socket
J30J-9、15、21、25、31、37、51、66、74、100ZK-C

Product Stereogram

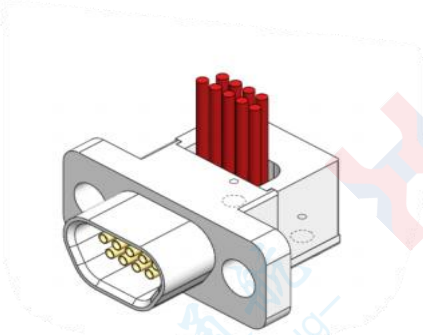
J30J-9ZK-C

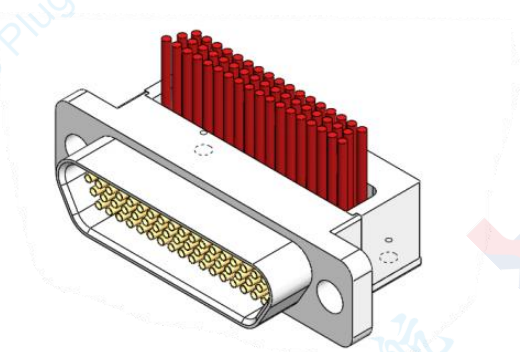
J30J-51ZK-C

Product Overall Dimensions

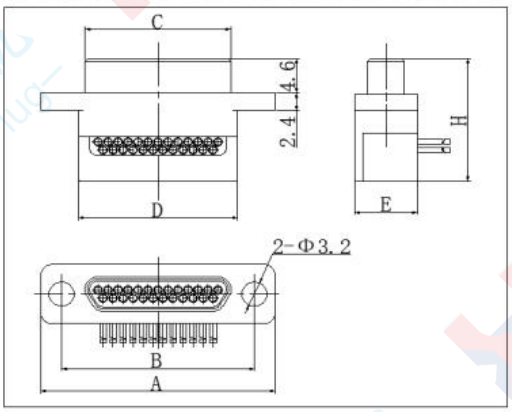

J30J-□TJ-C

Product Overall Dimensions

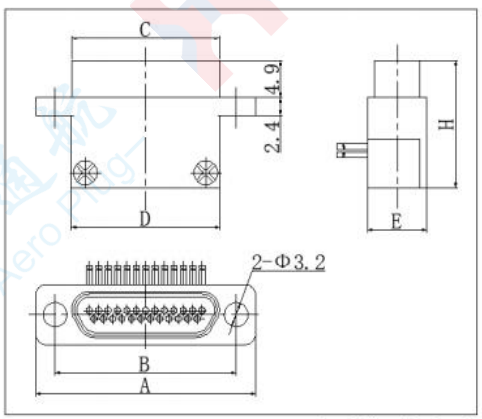

J30J-□ZK-C

J30J-TJ-C&J30J-ZK-C

Order mark	A	B	C	D	E	H
J30J-9TJ-C	19.6	14.3	8.3	9.9	8	16.5
J30J-15TJ-C	23.5	18.2	12.3	13.8	8	16.5
J30J-21TJ-C	27.4	22	16	17.6	8	16.5
J30J-25TJ-C	29.8	24.5	18.6	20.2	8	16.5
J30J-31TJ-C	33.6	28.3	22.4	24	8	16.5
J30J-37TJ-C	37.4	32.2	26.3	27.8	8	16.5
J30J-51TJ-C	36.4	30.86	25	26.6	9	17.8
J30J-66TJ-C	42.9	37.3	31.4	33	9	17.8
J30J-74TJ-C	38.8	33.5	27.5	29.1	11	19.4
J30J-100TJ-C	54.7	45.7	35	36.8	11	19.4
J30J-9ZK-C	19.6	14.3	9.8	9.9	8	16.9
J30J-15ZK-C	23.5	18.2	13.7	13.8	8	16.9
J30J-21ZK-C	27.4	22	17.4	17.6	8	16.9
J30J-25ZK-C	29.8	24.5	20	20.2	8	16.9
J30J-31ZK-C	33.6	28.3	23.8	24	8	16.9
J30J-37ZK-C	37.4	32.2	27.7	27.8	8	16.9
J30J-51ZK-C	36.4	30.86	26.5	26.6	9	18.2
J30J-66ZK-C	42.9	37.3	32.9	33	9	18.2
J30J-74ZK-C	38.8	33.5	29	29.1	11	19.7
J30J-100ZK-C	54.7	45.7	36.6	36.8	11	19.7

J30J-TJ-C1＆J30J-ZK-C1

A right-angle cable clip is added to the existing J30J-TJ/ZK-C crimp-terminated wire products (tail-end type). The wire harness is covered with a metal braided shield, and there is one cable outlet on the same side.

The plug and socket have an overall length of only 16.5～19mm, making them suitable for space-constrained applications requiring shielding.

The pressure plate is fixed to the housing with screws.

Plug

J30J-9、15、21、25、31、37、51、66、74、100TJ-C1

Product Stereogram

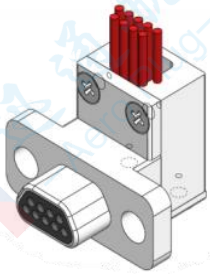

J30J-9TJ-C1

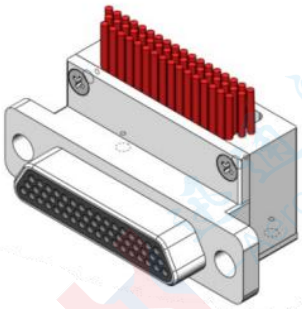

J30J-51TJ-C1

Socket

J30J-9、15、21、25、31、37、51、66、74、100ZK-C1

Product Stereogram

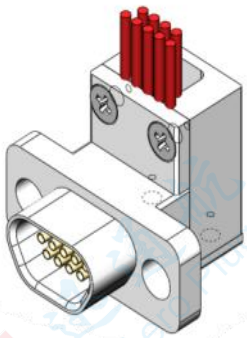

J30J-9ZK-C1

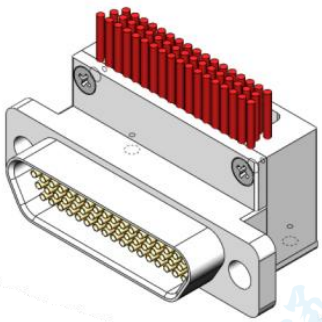

J30J-51ZK-C1

Overall Product Dimensions

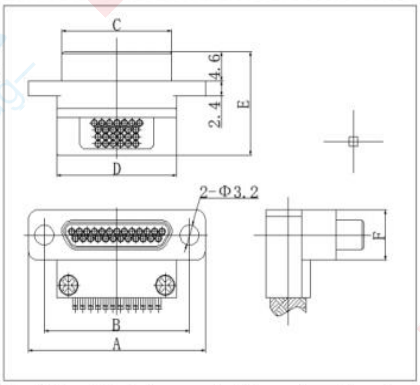

J30J-□TJ-C1

Overall Product Dimensions

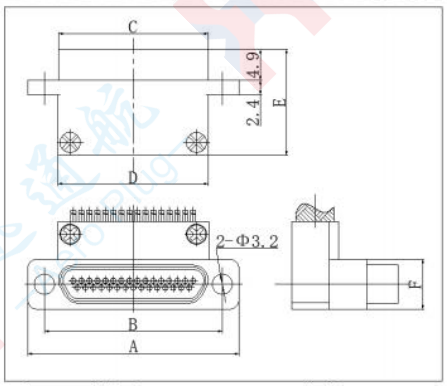

J30J-□ZK-C1

J30J-TJ-C1 & J30J-ZK-C1

Order mark	A	B	C	D	E	F
J30J-9TJ-C1	19.6	14.3	8.3	9.9	16.5	8
J30J-15TJ-C1	23.5	18.2	12.3	13.8	16.5	8
J30J-21TJ-C1	27.4	22	16	17.6	16.5	8
J30J-25TJ-C1	29.8	24.5	18.6	20.2	16.5	8
J30J-31TJ-C1	33.6	28.3	22.4	24	16.5	8
J30J-37TJ-C1	37.4	32.2	26.3	27.8	16.5	8
J30J-51TJ-C1	36.4	30.86	25	26.6	17.8	9
J30J-66TJ-C1	42.9	37.3	31.4	33	17.8	9
J30J-74TJ-C1	38.8	33.5	27.5	29.1	19.4	11
J30J-100TJ-C1	54.7	45.7	35	36.8	19.4	11
J30J-9ZK-C1	19.6	14.3	9.8	9.9	16.9	8
J30J-15ZK-C1	23.5	18.2	13.7	13.8	16.9	8
J30J-21ZK-C1	27.4	22	17.4	17.6	16.9	8
J30J-25ZK-C1	29.8	24.5	20	20.2	16.9	8
J30J-31ZK-C1	33.6	28.3	23.8	24	16.9	8
J30J-37ZK-C1	37.4	32.2	27.7	27.8	16.9	8
J30J-51ZK-C1	36.4	30.86	26.5	26.6	18.2	9
J30J-66ZK-C1	42.9	37.3	32.9	33	18.2	9
J30J-74ZK-C1	38.8	33.5	29	29.1	19.7	11
J30J-100ZK-C1	54.7	45.7	36.6	36.8	19.7	11

J30J-TJ-D&J30J-ZK-D

A slot is provided at the mounting hole of the housing flange to prevent screw rotation during installation.

.Plug

.J30J-9、15、21、25、31、37、51、66、74、100TJ-D

Product 3D View

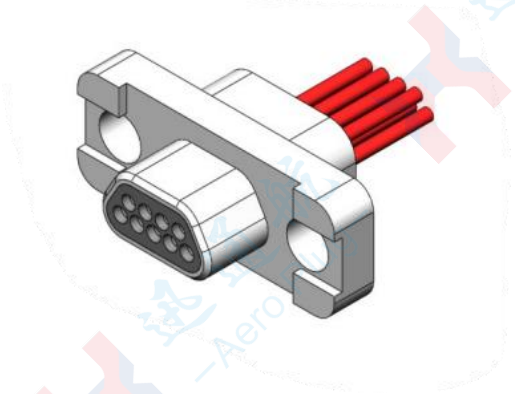

J30J-9TJ-D

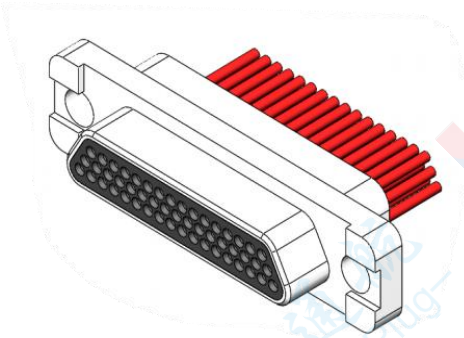

J30J-51TJ-D

.Socket

.J30J-9、15、21、25、31、37、51、66、74、100ZK-D

Product 3D View

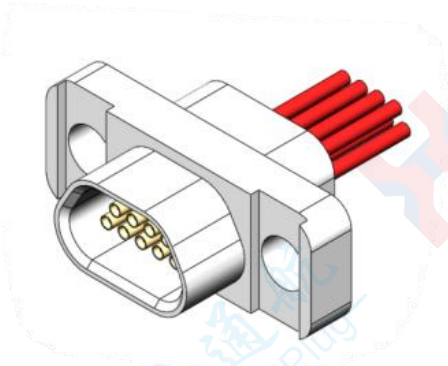

J30J-9ZK-D

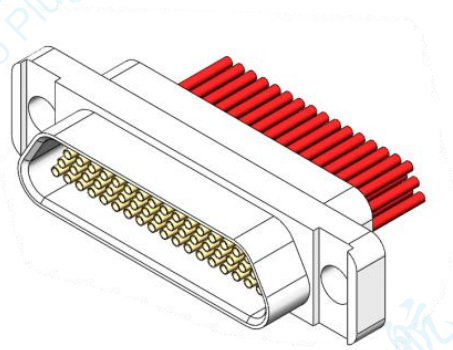

J30J-51ZK-D

Overall Product Dimensions

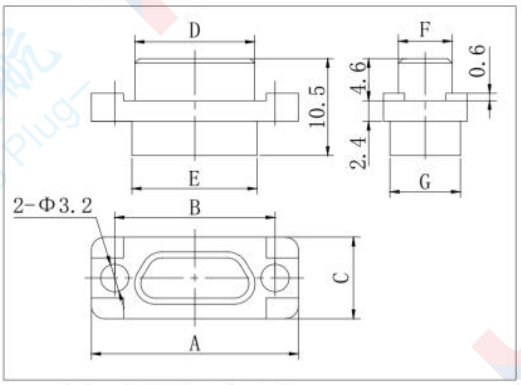

J30J-□TJ-D

Overall Product Dimensions

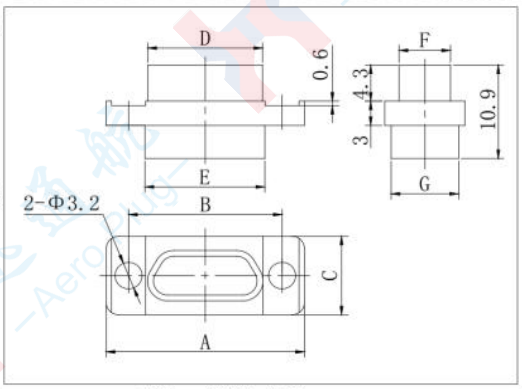

J30J-□ZK-D

J30J-TJ-D&J30J-ZK-D

Order mark	A	B	C	D	E	F	G
J30J-9TJ-D	19.6	14.3	7.6	8.3	9.9	4.7	6.8
J30J-15TJ-D	23.5	18.2	7.6	12.3	13.8	4.7	6.8
J30J-21TJ-D	27.4	22	7.6	16	17.6	4.7	6.8
J30J-25TJ-D	29.8	24.5	7.6	18.6	20.2	4.7	6.8
J30J-31TJ-D	33.6	28.3	7.6	22.4	24	4.7	6.8
J30J-37TJ-D	37.4	32.2	7.6	26.3	27.8	4.7	6.8
J30J-51TJ-D	36.4	30.86	8.7	25	26.6	5.8	7.9
J30J-66TJ-D	42.9	37.3	8.7	31.4	33	5.8	7.9
J30J-74TJ-D	38.8	33.5	9.7	27.5	29.1	6.8	9.1
J30J-100TJ-D	54.7	45.7	9.7	35	36.6	6.8	9.1
J30J-9ZK-D	19.6	14.3	7.6	9.8	9.9	6.1	6.8
J30J-15ZK-D	23.5	18.2	7.6	13.7	13.8	6.1	6.8
J30J-21ZK-D	27.4	22	7.6	17.4	17.6	6.1	6.8
J30J-25ZK-D	29.8	24.5	7.6	20	20.2	6.1	6.8
J30J-31ZK-D	33.6	28.3	7.6	23.8	24	6.1	6.8
J30J-37ZK-D	37.4	32.2	7.6	27.7	27.8	6.1	6.8
J30J-51ZK-D	36.4	30.86	8.7	26.5	26.6	7.2	7.9
J30J-66ZK-D	42.9	37.3	8.7	32.9	33	7.2	7.9
J30J-74ZK-D	38.8	33.5	9.7	29	29.1	8.3	9.1
J30J-100ZK-D	54.7	45.7	9.7	36.6	36.65	8.2	9.1

J30J crimped expansion type/J30J-TJ-Q & J30J-ZK-Q

The length and width of the housing flange, as well as the spacing between mounting holes, have been increased, and a flange interface gasket is provided.

Plug

J30J-9、15、21、25、31、37、51、66、74、100TJ-Q

Product Stereogram

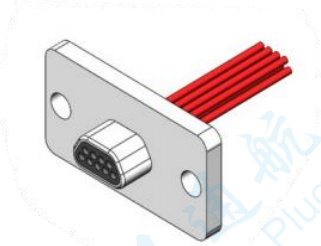

J30J-9TJ-Q

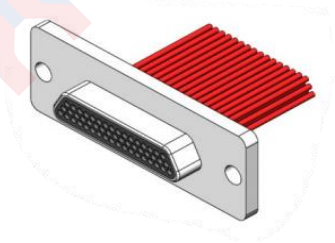

J30J-51TJ-Q

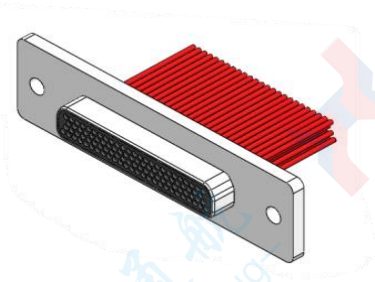

J30J-100TJ-Q

Socket

J30J-9、15、21、25、31、37、51、66、74、100ZK-Q

Product Stereogram

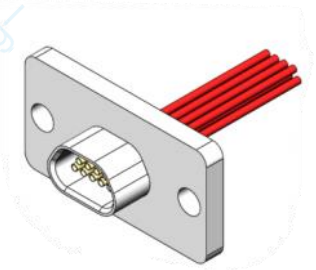

J30J-9ZK-Q

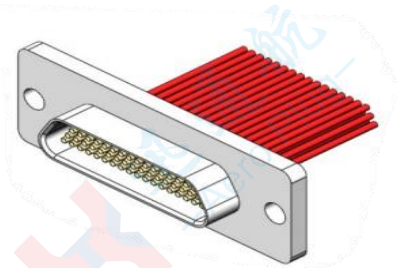

J30J-51ZK-Q

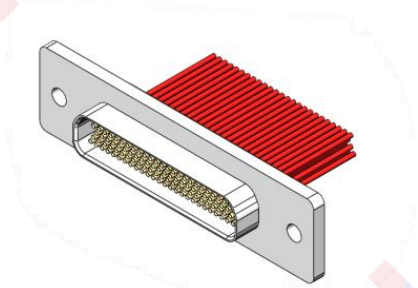

J30J-100ZK-Q

Product Overall Dimensions

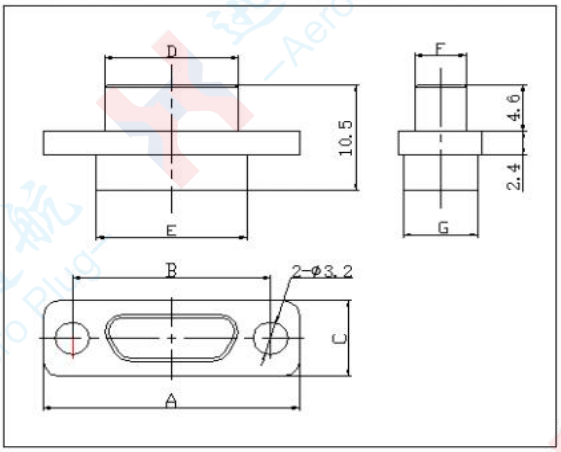

J30J-□TJ-Q

Product Overall Dimensions

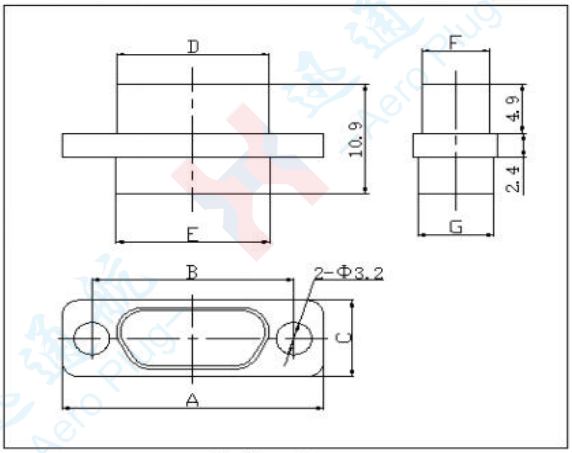

J30J-□ZK-Q

J30J-TJ-Q&J30J-ZK-Q

Order Mark	A	B	C	D	E	F	G
J30J-9TJ-Q	26	21	14	8.3	9.9	4.7	6.8
J30J-15TJ-Q	29.9	24.9	14	12.3	13.8	4.7	6.8
J30J-21TJ-Q	33.8	28.7	14	16	17.6	4.7	6.8
J30J-25TJ-Q	36.2	31.2	14	18.6	20.2	4.7	6.8
J30J-31TJ-Q	40	35	14	22.4	24	4.7	6.8
J30J-37TJ-Q	43.8	38.9	14	26.3	27.8	4.7	6.8
J30J-51TJ-Q	42.6	37.6	15.2	25	26.6	5.8	7.9
J30J-66TJ-Q	49.3	44	15.2	31.4	33	5.8	7.9
J30J-74TJ-Q	45.2	40.2	16.1	27.5	29.1	6.8	9.1
J30J-100TJ-Q	61.1	52.4	16.1	35	36.6	6.8	9.1
J30J-9ZK-Q	26	21	14	9.8	9.9	6.1	6.8
J30J-15ZK-Q	29.9	24.9	14	13.7	13.8	6.1	6.8
J30J-21ZK-Q	33.8	28.7	14	17.4	17.6	6.1	6.8
J30J-25ZK-Q	36.2	31.2	14	20	20.2	6.1	6.8
J30J-31ZK-Q	40	35	14	23.8	24	6.1	6.8
J30J-37ZK-Q	43.8	38.9	14	27.7	27.8	6.1	6.8
J30J-51ZK-Q	42.6	37.6	15.2	26.5	26.6	7.2	7.9
J30J-66ZK-Q	49.3	44	15.2	32.9	33	7.2	7.9
J30J-74ZK-Q	45.2	40.2	16.1	29	29.1	8.3	9.1
J30J-100ZK-Q	61.1	52.4	16.1	36.6	36.65	8.2	9.1

J30J crimped expansion type/J30J-TJ-Q8&J30J-ZK-Q8

Plug

J30J-9、15、21、25、31、37、51、66、74、100TJ-Q8

Product Stereogram

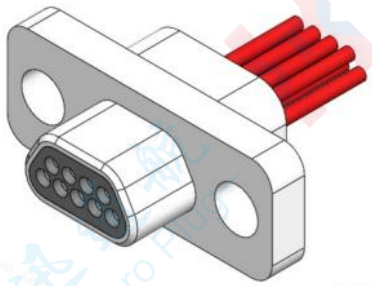

J30J-9TJ-Q8

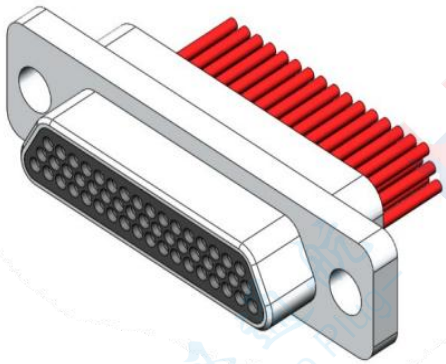

J30J-51TJ-Q8

Socket

J30J-9、15、21、25、31、37、51、66、74、100ZK-Q8

Product Stereogram

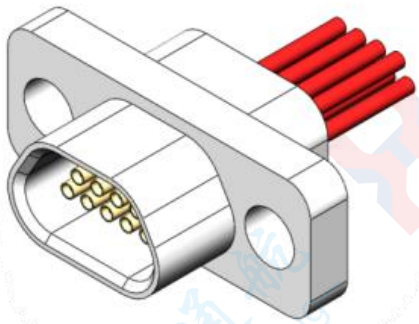

J30J-9ZK-Q8

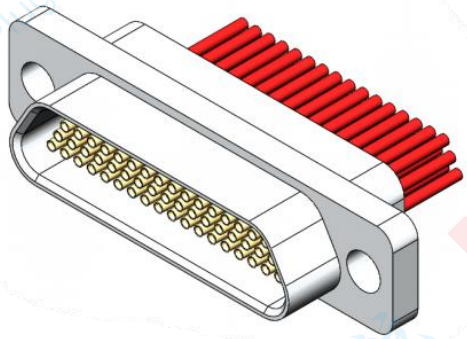

J30J-51ZK-Q8

Overall Product Dimensions Drawing

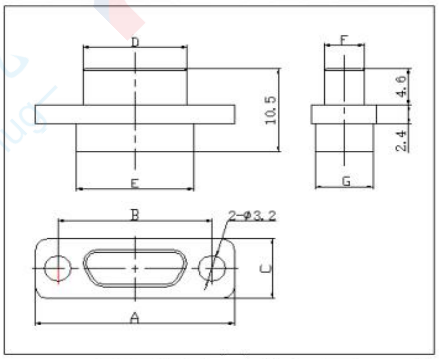

J30J-□TJ-Q8

Overall Product Dimensions Drawing

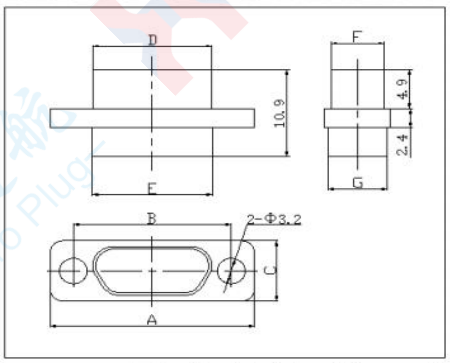

J30J-□ZK-Q8

J30J-TJ-Q8＆J30J-ZK-Q8

Order Mark	A	B	C	D	E	F	G
J30J-9TJ-Q8	21.4	16.1	11.6	8.3	11.7	4.7	6.8
J30J-15TJ-Q8	25.3	20	11.6	12.3	15.6	4.7	6.8
J30J-21TJ-Q8	29.2	23.8	11.6	16	19.4	4.7	6.8
J30J-25TJ-Q8	31.6	26.3	11.6	18.6	22	4.7	6.8
J30J-31TJ-Q8	35.4	30.1	11.6	22.4	25.8	4.7	6.8
J30J-37TJ-Q8	39.2	34	11.6	26.3	29.6	4.7	6.8
J30J-51TJ-Q8	38.2	32.6	12.6	25	28.4	5.8	7.9
J30J-66TJ-Q8	44.7	39.1	12.6	31.4	34.8	5.8	7.9
J30J-74TJ-Q8	40.6	35.3	13.8	27.5	30.9	6.8	9.1
J30J-100TJ-Q8	56.5	47.5	13.8	35	38.6	6.8	9.1
J30J-9ZK-Q8	21.4	16.1	11.6	9.8	11.7	6.1	6.8
J30J-15ZK-Q8	25.3	20	11.6	13.7	15.6	6.1	6.8
J30J-21ZK-Q8	29.2	23.8	11.6	17.4	19.4	6.1	6.8
J30J-25ZK-Q8	31.6	26.3	11.6	20	22	6.1	6.8
J30J-31ZK-Q8	35.4	30.1	11.6	23.8	25.8	6.1	6.8
J30J-37ZK-Q8	39.2	34	11.6	27.7	29.6	6.1	6.8
J30J-51ZK-Q8	38.2	32.6	12.6	26.5	28.4	7.2	7.9
J30J-66ZK-Q8	44.7	39.1	12.6	32.9	34.8	7.2	7.9
J30J-74ZK-Q8	40.6	35.3	13.8	29	30.9	8.3	9.1
J30J-100ZK-Q8	56.5	47.5	13.8	36.6	38.6	8.2	9.1

J30J crimped expansion type/J30J-TJ-A & J30J-ZK-A

Plug

J30J-9、15、21、25、31、37、51、66、74、100TJ-A

Product Stereogram

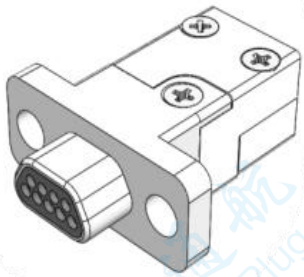

J30J-9TJ-A

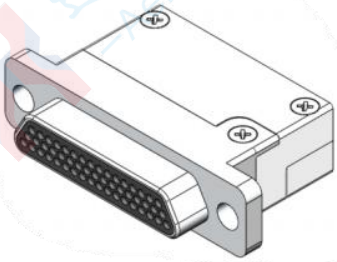

J30J-51TJ-A

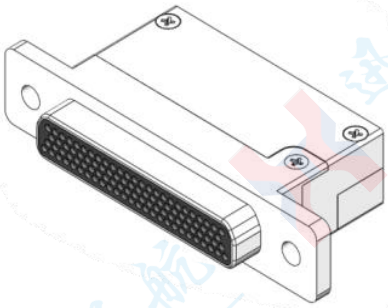

J30J-100TJ-A

Socket

J30J-9、15、21、25、31、37、51、66、74、100ZK-A

Product Stereogram

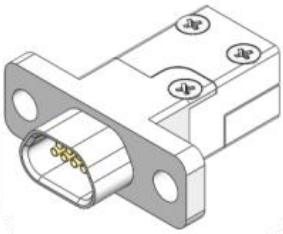

J30J-9ZK-A

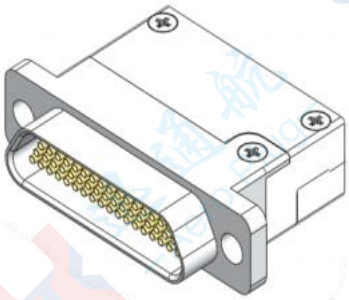

J30J-51ZK-A

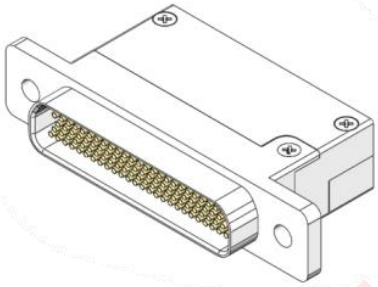

J30J-100ZK-A

Overall Product

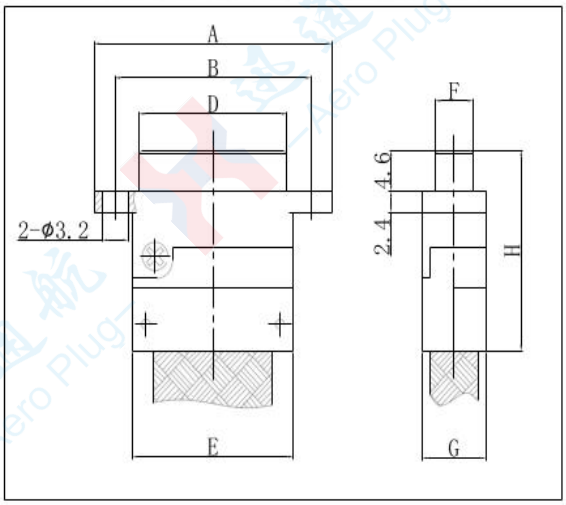

J30J-□TJ-A

Overall Product

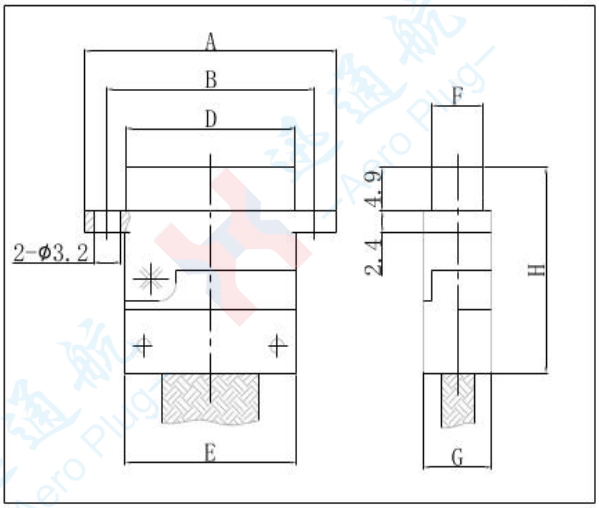

J30J-□ZK-A

J30J crimped expansion type/J30J-TJ-A & J30J-ZK-A

Order Mark	A	B	D		E	F		G	H	
			TJ-A	ZK-A		TJ-A	ZK-A		TJ-A	ZK-A
J30J-9TJ / ZK-A	19.6	14.3	8.3	9.8	9.9	4.7	6.1	8	23	23.5
J30J-15TJ / ZK-A	23.5	18.2	12.3	13.7	13.8	4.7	6.1	8	23	23.5
J30J-21TJ / ZK-A	27.4	22	16	17.4	17.6	4.7	6.1	8	23	23.5
J30J-25TJ / ZK-A	29.8	24.5	18.6	20	20.2	4.7	6.1	8	23	23.5
J30J-31TJ / ZK-A	33.6	28.3	22.4	23.8	24	4.7	6.1	8	23	23.5
J30J-37TJ / ZK-A	37.4	32.2	26.3	27.7	27.8	4.7	6.1	8	23	23.5
J30J-51TJ / ZK-A	36.4	30.86	25	26.5	26.6	5.8	7.2	9	23	23.5
J30J-66TJ / ZK-A	42.9	37.3	31.4	32.9	33	5.8	7.2	9	23	23.5
J30J-74TJ / ZK-A	38.8	33.5	27.5	29	29.1	6.8	8.3	11	25	25.5
J30J-100TJ / ZK-A	54.7	45.7	35	36.6	36.8	6.8	8.2	11	25	25.5

Overall Dimensions After Product Mating

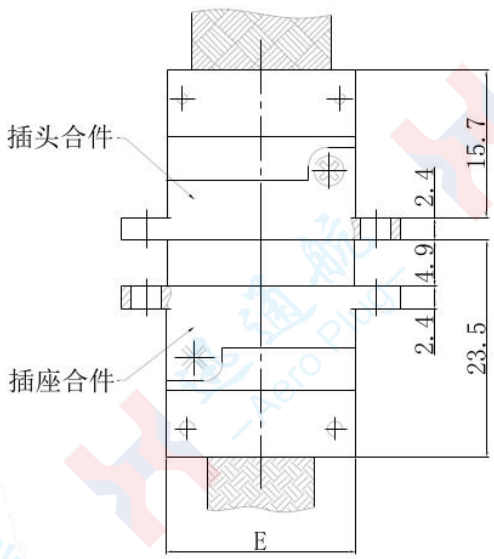

J30J-9～66 core

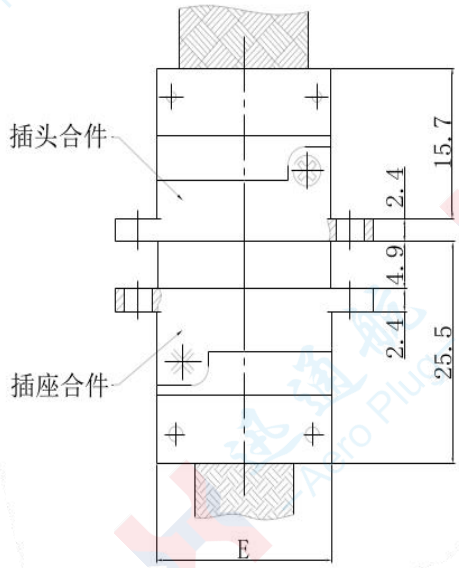

J30J-74～ 100 core

J30J crimped expansion type/J30J-TJ-AQ8 & J30J-ZK-AQ8

Plug

J30J-9、15、21、25、31、37、51、66、74、100TJ-AQ8

Product Stereogram

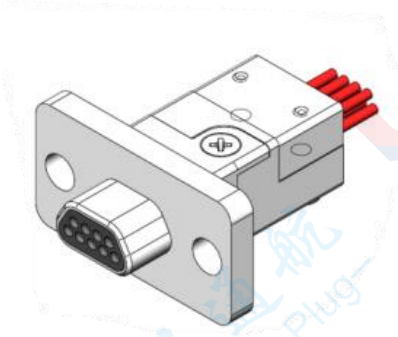

J30J-9TJ-AQ8

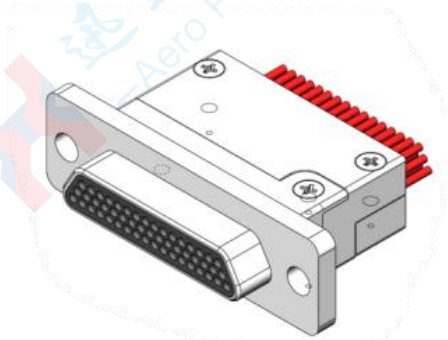

J30J-51TJ-AQ8

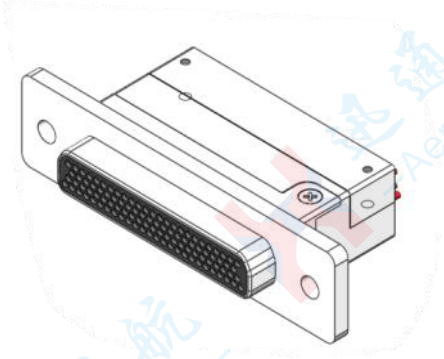

J30J-100TJ-AQ8

Socket

J30J-9、15、21、25、31、37、51、66、74、100ZK-AQ8

Product Stereogram

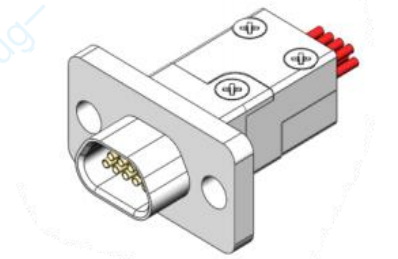

J30J-9ZK-AQ8

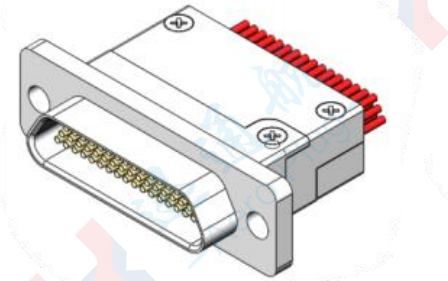

J30J-51ZK-AQ8

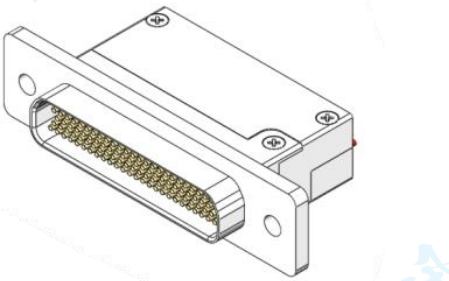

J30J-100ZK-AQ8

Overall Product Dimensions

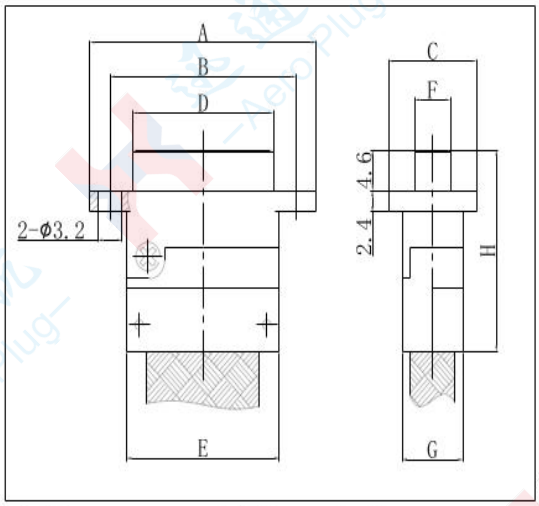

J30J-□TJ-AQ8

Overall Product Dimensions

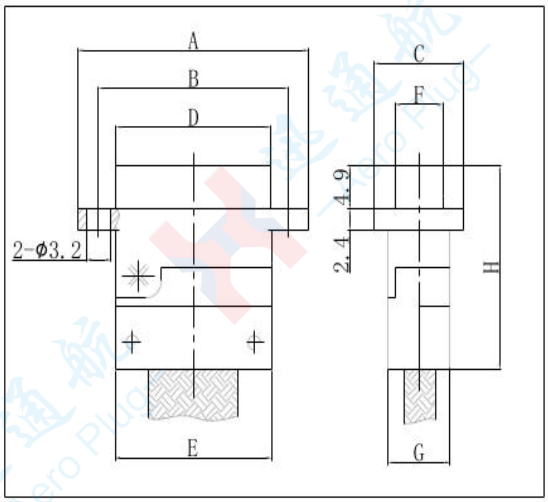

J30J-□ZK-AQ8

J30J Crimp Extended Type \ J30J-TJ-AQ8 & J30J-ZK-AQ8

Order Mark	A	B	C	D		E	F		G	H	
				TJ-AQ8	ZK-AQ8		TJ-AQ8	ZK-AQ8		TJ-AQ8	ZK-AQ8
J30J-9TJ / ZK-AQ8	21.4	16.1	11.6	8.3	9.8	9.9	4.7	6.1	8	23	23.5
J30J-15TJ / ZK-AQ8	25.3	20	11.6	12.3	13.7	13.8	4.7	6.1	8	23	23.5
J30J-21TJ / ZK-AQ8	29.2	23.8	11.6	16	17.4	17.6	4.7	6.1	8	23	23.5
J30J-25TJ / ZK-AQ8	31.6	26.3	11.6	18.6	20	20.2	4.7	6.1	8	23	23.5
J30J-31TJ / ZK-AQ8	35.4	30.1	11.6	22.4	23.8	24	4.7	6.1	8	23	23.5
J30J-37TJ / ZK-AQ8	39.2	34	11.6	26.3	27.7	27.8	4.7	6.1	8	23	23.5
J30J-51TJ / ZK-AQ8	38.2	32.6	12.6	25	26.5	26.6	5.8	7.2	9	23	23.5
J30J-66TJ / ZK-AQ8	44.7	39.1	12.6	31.4	32.9	33	5.8	7.2	9	23	23.5
J30J-74TJ / ZK-AQ8	40.6	35.3	13.8	27.5	29	29.1	6.8	8.3	11	25	25.5
J30J-100TJ / ZK-AQ8	56.5	47.5	13.8	35	36.6	36.8	6.8	8.2	11	25	25.5

Overall Dimensions of Mated Products

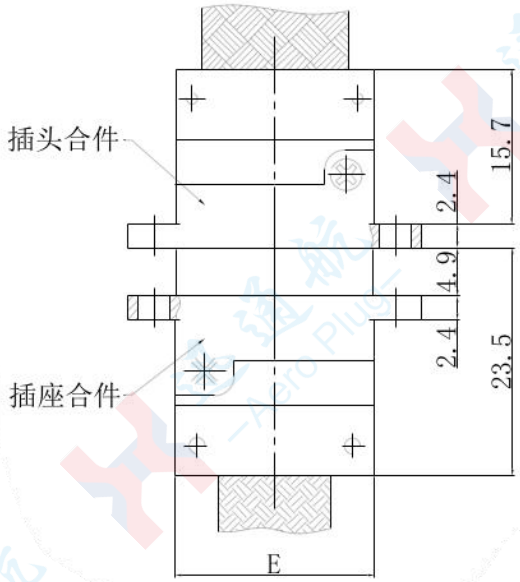

J30J-9～66 Core

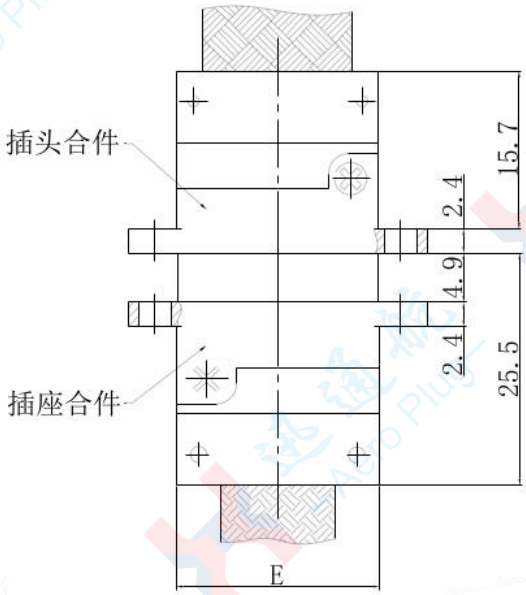

J30J-74～ 100 Core

J30J through-hole printed circuit board Basic Type /J30J through-hole printed Circuit Board N type

The tail end of the contact is connected to the printed circuit board via a through-hole (straight insertion) type, with a grid size of 2.54x2.54

Plug

J30J-9、15、21、25、31、37、51、66TJN

Socket

J30J-9、15、21、25、31、37、51、66ZKN

Product Stereogram

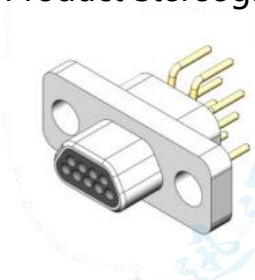

J30J-9TJN

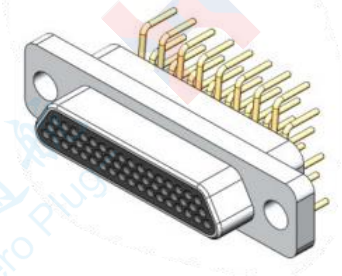

J30J-51TJN

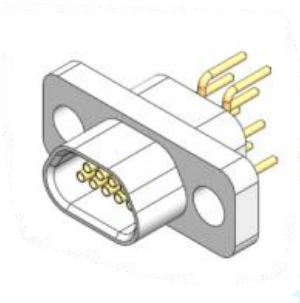

J30J-9ZKN

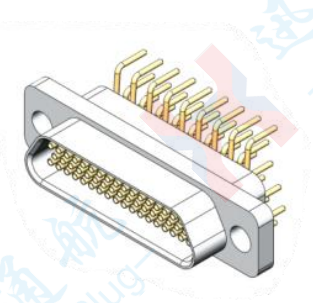

J30J-51ZKN

Product Overall Dimensions

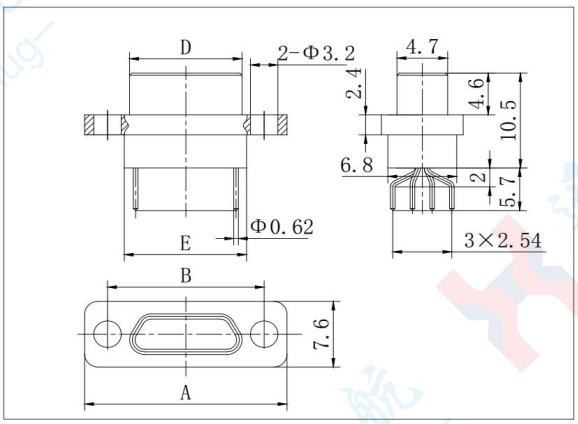

J30J-9～37TJN

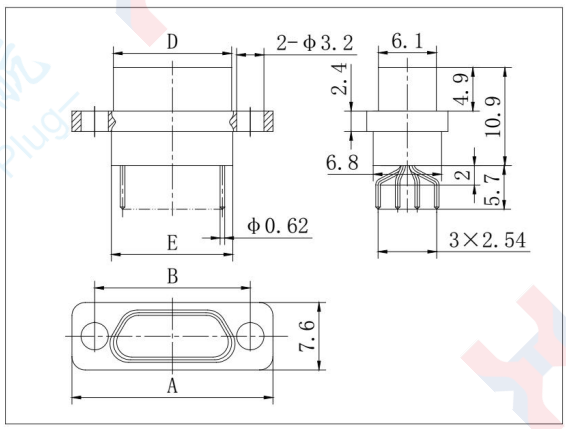

J30J-9～37ZKN

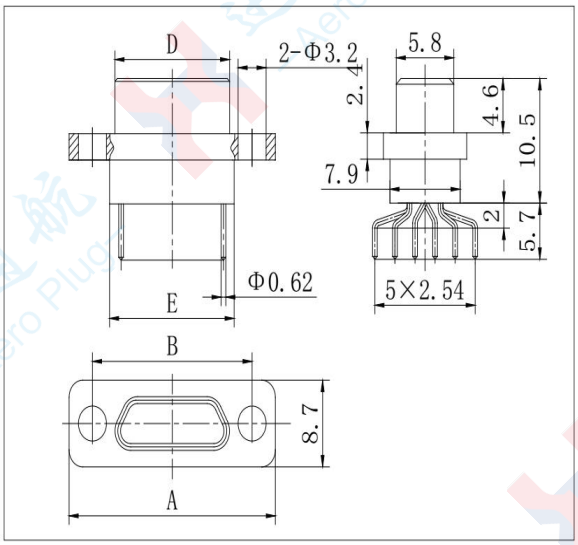

J30J-51、66TJN

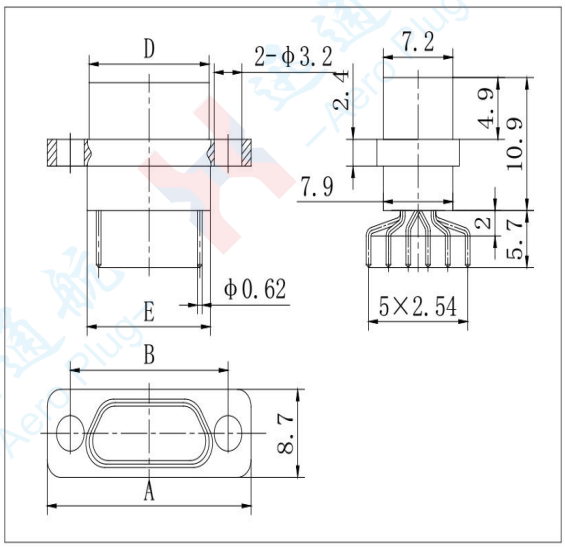

J30J-51、66ZKN

J30J Through-Hole PCB N-Type J30J-TJN & J30J-ZKN

Order mark	A	B	D		E
J30J-9TJN/ZKN	19.6	14.3	8.3(TJN)	9.8(ZKN)	9.9
J30J-15TJN/ZKN	23.5	18.2	12.3(TJN)	13.7(ZKN)	13.8
J30J-21TJN/ZKN	27.4	22	16(TJN)	17.4(ZKN)	17.6
J30J-25TJN/ZKN	29.8	24.5	18.6(TJN)	20(ZKN)	20.2
J30J-31TJN/ZKN	33.6	28.3	22.4(TJN)	23.8(ZKN)	24
J30J-37TJN/ZKN	37.4	32.2	26.3(TJN)	27.7(ZKN)	27.8
J30J-51TJN/ZKN	36.4	30.86	25(TJN)	26.5(ZKN)	26.6
J30J-66TJN/ZKN	42.9	37.3	31.4(TJN)	32.9(ZKN)	33

J30J Insertion PCB Basic Type / J30J Through-Hole PCB N-J Type

The tail end of the contact is connected to the printed circuit board via a through-hole (straight insertion) type, with a grid size of 1.27×2.54 (column × row).

Plug

J30J-9、15、21、25、31、37、51TJN-J

Product Stereogram

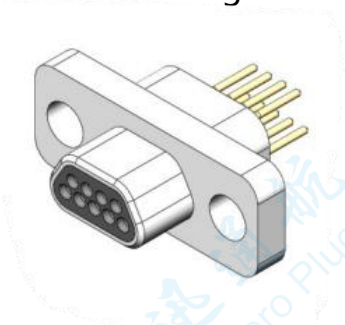

J30J-9TJN-J

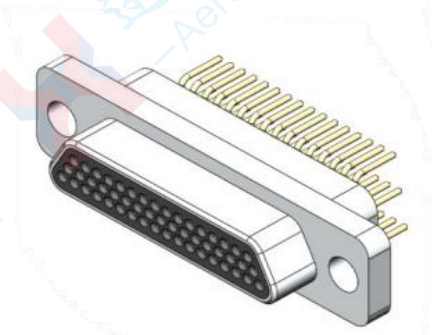

J30J-51TJN-J

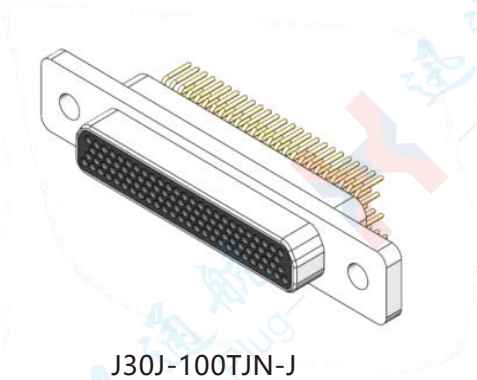

J30J-100TJN-J

Socket

J30J-9、15、21、25、31、37、51ZKN-J

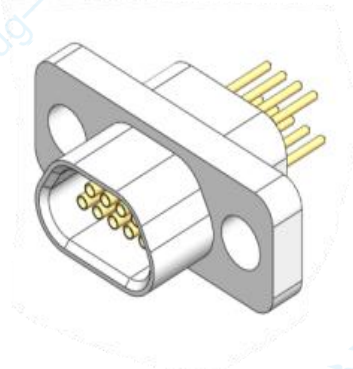

J30J-9ZKN-J

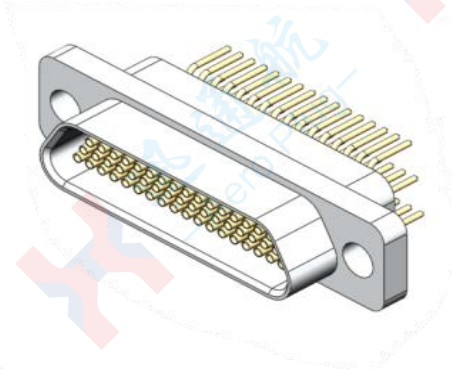

J30J-51ZKN-J

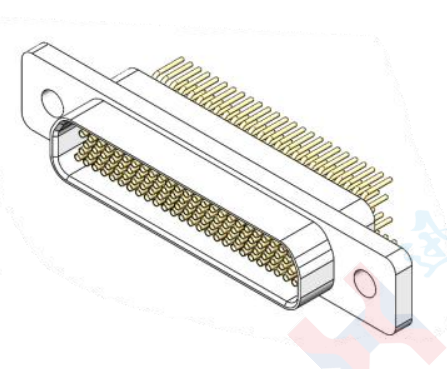

J30J-100ZKN-J

Product Overall Dimensions and Left Views of Plugs with Various Core Counts

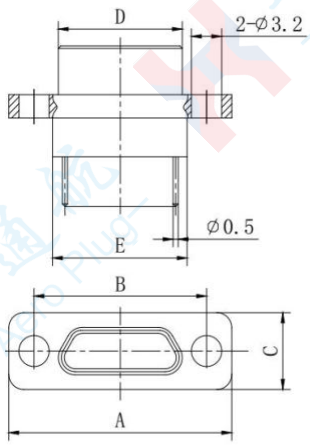

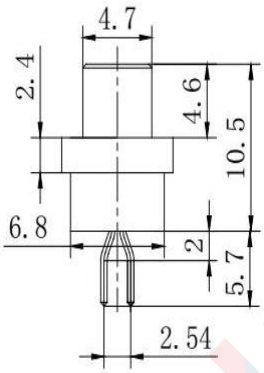

J30J-9、37TJN-J

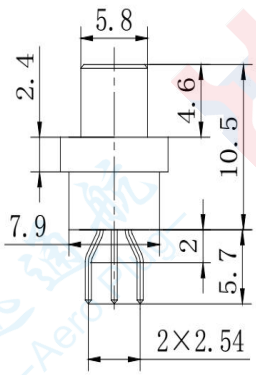

J30J-51、66TJN-J

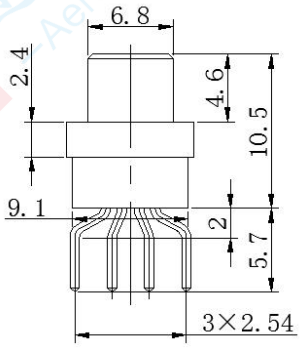

J30J-74、100TJN-J

Product Overall Dimensions and Left Views of Sockets with Various Contact Counts

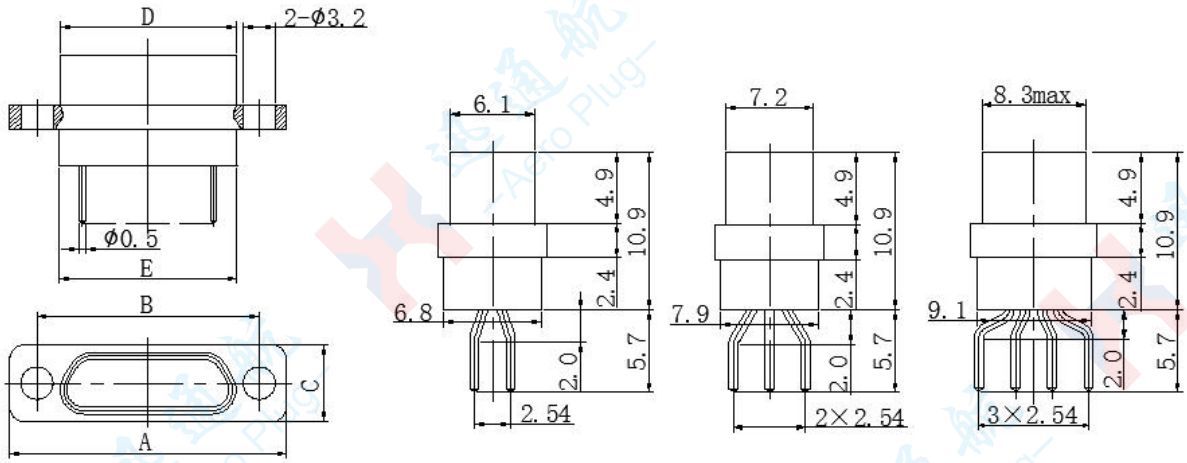

J30J-9、37ZKN-J　　J30J-51、66ZKN-J　　J30J-74、100ZKN-J

J30J Through-Hole PCB N-J Type J30J-TJN-J & J30J-ZKN-J

Order mark	A	B	C	D		E
J30J-9TJN/ZKN-J	19.6	14.3	7.6	8.3 (TJN-J)	9.8 (ZKN-J)	9.9
J30J-15TJN/ZKN-J	23.5	18.2	7.6	12.3 (TJN-J)	13.7 (ZKN-J)	13.8
J30J-21TJN/ZKN-J	27.4	22	7.6	16 (TJN-J)	17.4 (ZKN-J)	17.6
J30J-25TJN/ZKN-J	29.8	24.5	7.6	18.6 (TJN-J)	20 (ZKN-J)	20.2
J30J-31TJN/ZKN-J	33.6	28.3	7.6	22.4 (TJN-J)	23.8 (ZKN-J)	24
J30J-37TJN/ZKN-J	37.4	32.2	7.6	26.3 (TJN-J)	27.7 (ZKN-J)	27.8
J30J-51TJN/ZKN-J	36.4	30.86	8.7	25 (TJN-J)	26.5 (ZKN-J)	26.6
J30J-66TJN/ZKN-J	42.9	37.3	8.7	31.4 (TJN-J)	32.9(ZKN-J)	33
J30J-74TJN/ZKN-J	38.8	33.5	9.7	27.5(TJN-J)	29(ZKN-J)	29.1
J30J-100TJN/ZKN-J	54.7	45.7	9.7	35(TJN-J)	36.6(ZKN-J)	36.6

J30J through-hole printed circuit board Basic type /J30J bent through-hole printed circuit Board W type

The tail end of the contact piece is connected to the printed circuit board in a bent insertion type, with a grid size of 2.54×2.54.

Plug

J30J-9、15、21、25、31、37、51、66TJW

Socket

J30J-9、15、21、25、31、37、51、66ZKW

Product Stereogram

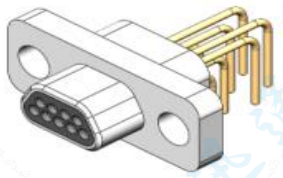

J30J-9TJW

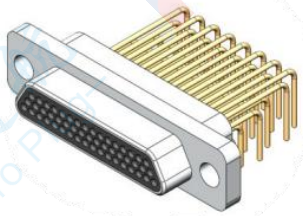

J30J-51TJW

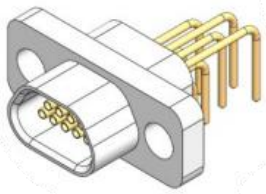

J30J-9ZKW

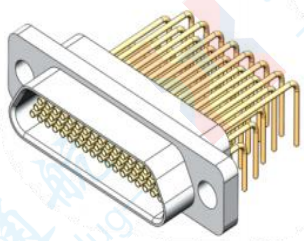

J30J-51ZKW

Product Overall Dimensions

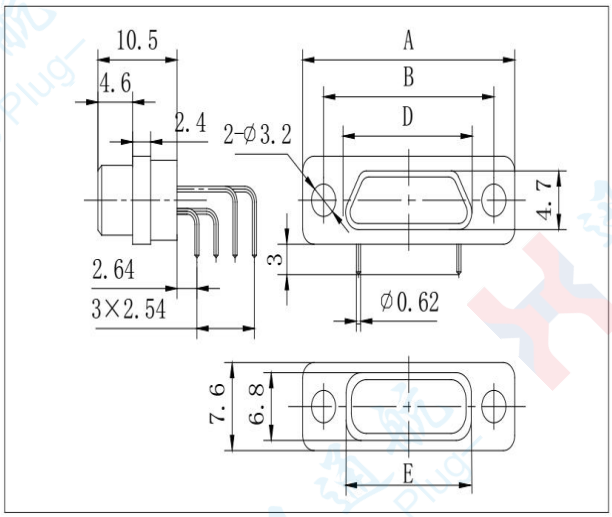

J30J-9～37TJW

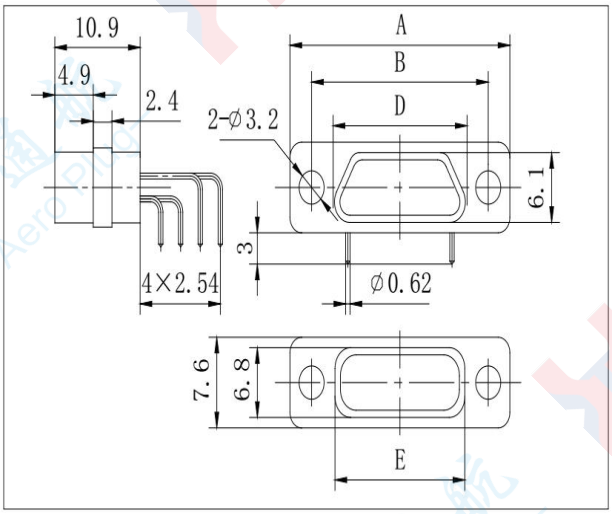

J30J-9～37ZKW

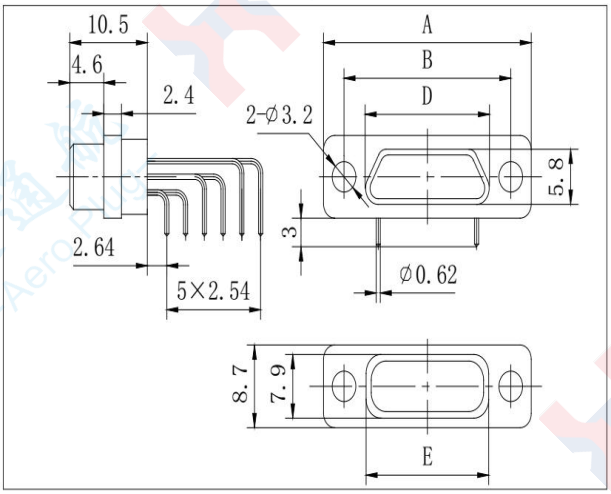

J30J-51、66TJW

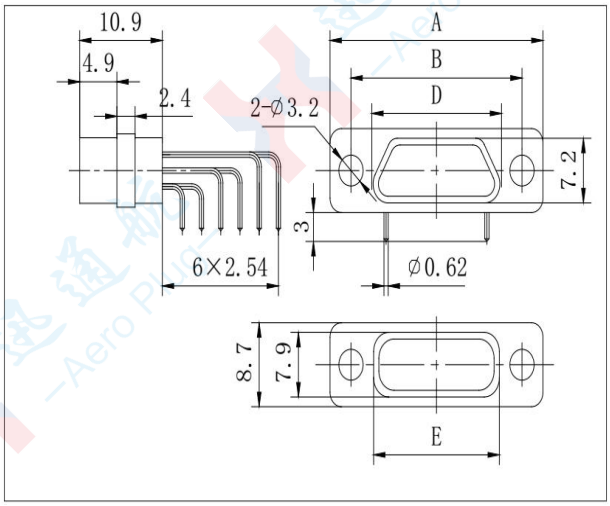

J30J-51、66ZKW

J30J Right-Angle Insertion PCB W-Type J30J-TJW & J30J-ZKW

Order mark	A	B	D		E
J30J-9TJW/ZKW	19.6	14.3	8.3 (TJW)	9.8 (ZKW)	9.9
J30J-15TJW/ZKW	23.5	18.2	12.3 (TJW)	13.7 (ZKW)	13.8
J30J-21TJW/ZKW	27.4	22	16 (TJW)	17.4 (ZKW)	17.6
J30J-25TJW/ZKW	29.8	24.5	18.6 (TJW)	20 (ZKW)	20.2
J30J-31TJW/ZKW	33.6	28.3	22.4 (TJW)	23.8 (ZKW)	24
J30J-37TJW/ZKW	37.4	32.2	26.3 (TJW)	27.7 (ZKW)	27.8
J30J-51TJW/ZKW	36.4	30.86	25 (TJW)	26.5 (ZKW)	26.6
J30J-66TJW/ZKW	42.9	37.3	31.4 (TJW)	32.9 (ZKW)	33

J30J Insertion PCB Basic Type \ J30J Right-Angle Insertion PCB W-J Type
The tail end of the contact is connected to the printed circuit board via a right-angle insertion type, with a grid size of 1.27×2.54 (column × row).

Plug

J30J-9、15、21、25、31、37、51TJW-J

Product Stereogram

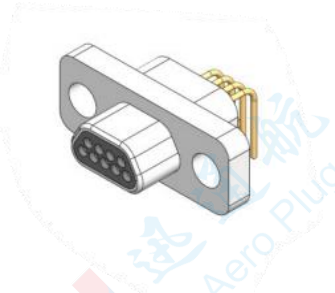

J30J-9TJW-J

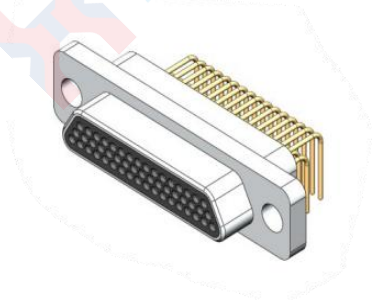

J30J-51TJW-J

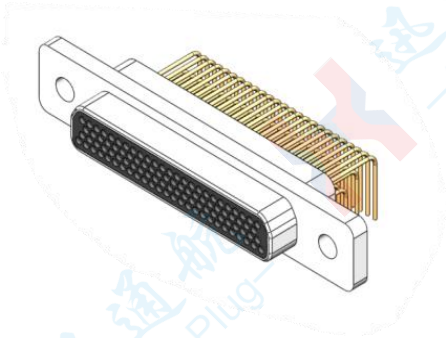

J30J-100TJW-J

Socket

J30J-9、15、21、25、31、37、51ZKW-J

Product Stereogram

J30J-9ZKW-J

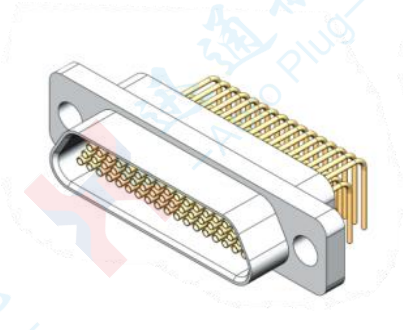

J30J-51ZKW-J

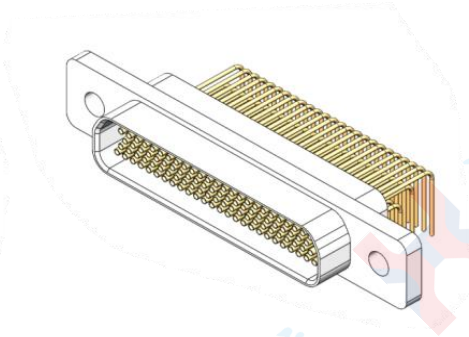

J30J-100ZKW-J

Product external dimensions

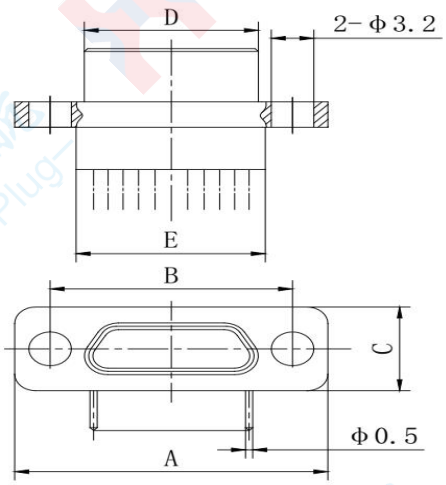

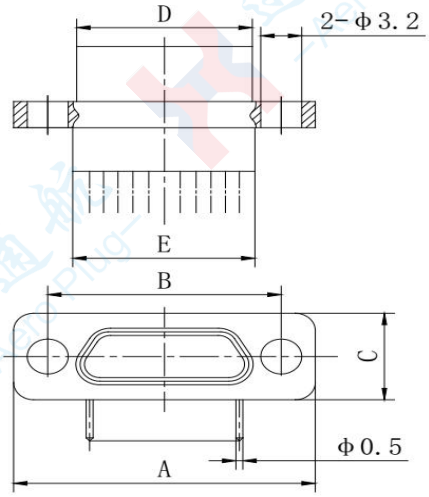

Left Views of Plug Assemblies with Various Contact Counts for J30J-9～100TJW-J

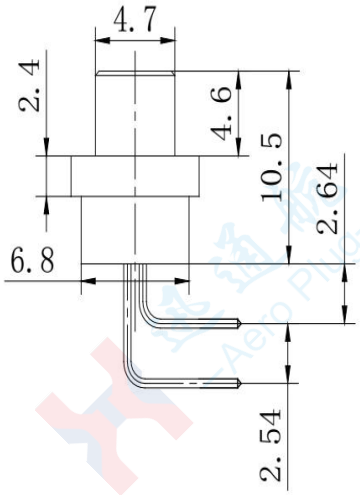

J30J-9、37TJW-J

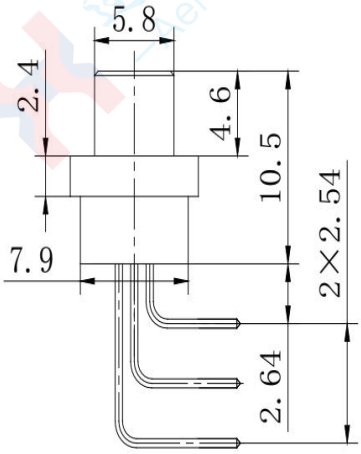

J30J-51、66TJW-J

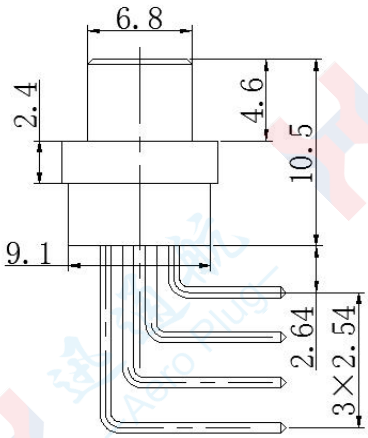

J30J-74、100TJW-J

Left Views of Socket Assemblies with Various Contact Counts for J30J-9～100ZKW-J

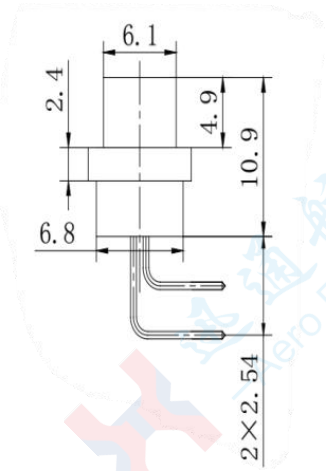

J30J-9、37ZKW-J

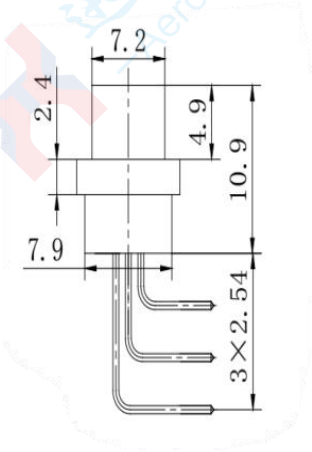

J30J-51、66ZKW-J

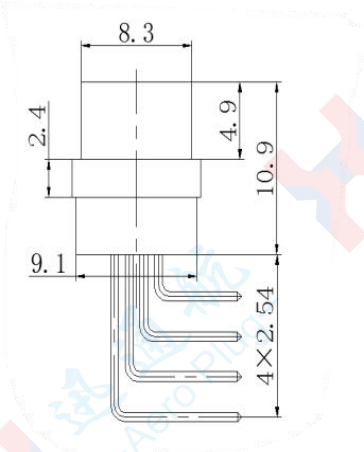

J30J-74、100ZKW-J

J30J Right-Angle Insertion PCB W-J Type J30J-TJW-J & J30J-ZKW-J

Order mark	A	B	C	D		E
J30J-9TJW/ZKW-J	19.6	14.3	7.6	8.3(TJN-J)	9.8(ZKN-J)	9.9
J30J-15TJW/ZKW-J	23.5	18.2	7.6	12.3(TJN-J)	13.7(ZKN-J)	13.8
J30J-21TJW/ZKW-J	27.4	22	7.6	16(TJN-J)	17.4 (ZKN-J)	17.6
J30J-25TJW/ZKW-J	29.8	24.5	7.6	18.6(TJN-J)	20(ZKN-J)	20.2
J30J-31TJW/ZKW-J	33.6	28.3	7.6	22.4(TJN-J)	23.8(ZKN-J)	24
J30J-37TJW/ZKW-J	37.4	32.2	7.6	26.3(TJN-J)	27.7(ZKN-J)	27.8
J30J-51TJW/ZKW-J	36.4	30.86	8.7	25(TJN-J)	26.5(ZKN-J)	26.6
J30J-66TJW/ZKW-J	42.9	37.3	8.7	31.4(TJN-J)	32.9(ZKN-J)	33
J30J-74TJW/ZKW-J	38.8	33.5	9.7	27.5(TJN-J)	29(ZKN-J)	29.1
J30J-100TJW/ZKW-J	54.7	45.7	9.7	35(TJN-J)	36.6(ZKN-J)	36.6

J30J Welding Basic Type \ J30J-TJS & J30J-ZKS

Basic Type Welded Products with a Tail Arrangement Spacing of 1.27×1.1 (Column × Row)

.Plug

.J30J-9、15、21、25、31、37、51、66、74、100TJS

Product Stereogram

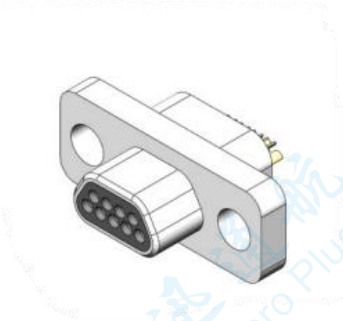

J30J-9TJS

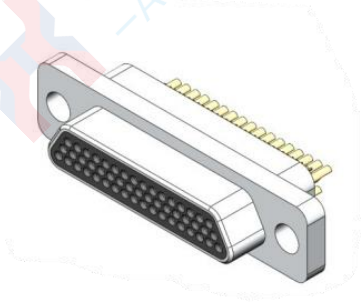

J30J-51TJS

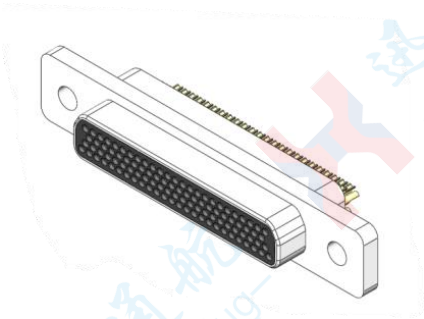

J30J-100TJS

.Socket

.J30J-9、15、21、25、31、37、51、66、74、100ZKS

Product Stereogram

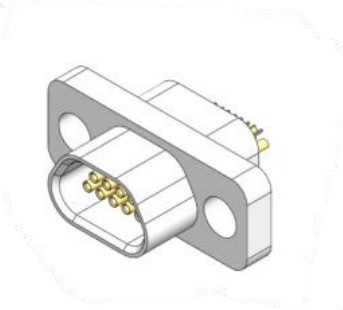

J30J-9ZKS

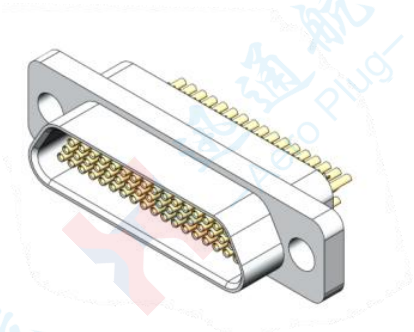

J30J-51ZKS

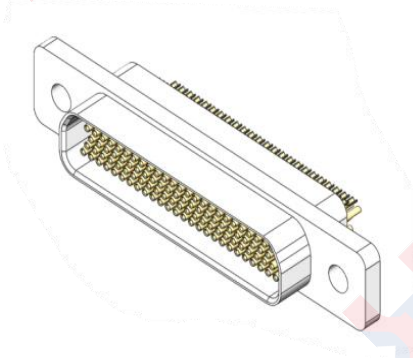

J30J-100ZKS

Note: All the above welded products are used in conjunction with A3 type wire clamp assemblies. The three-dimensional view of products with A3 wire clamp assemblies shall be as shown below (taking J30J-25ZKS as an example; other models of welded products are similar).

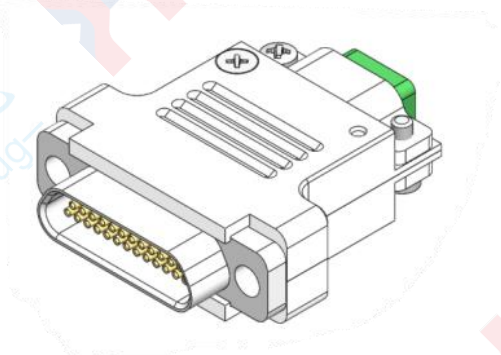

Three-dimensional view from the mating end

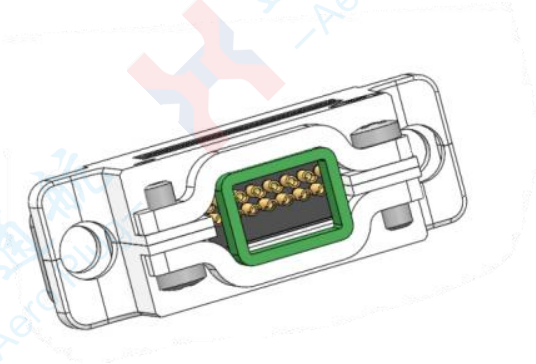

Three-dimensional view from the wire clamp tail end

J30J Welding Basic Type \ J30J-TJS & J30J-ZKS
Product Overall Dimensions

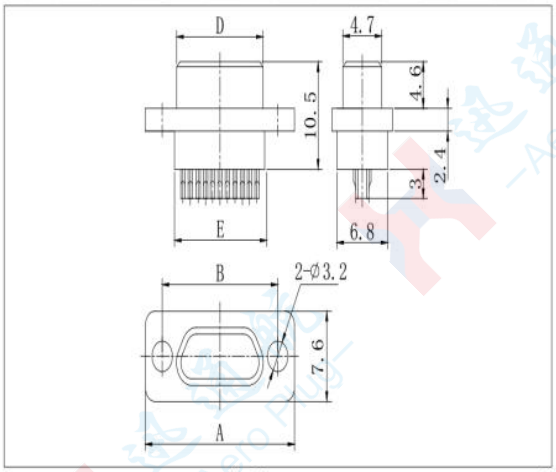

J30J-9 ~ 37TJS

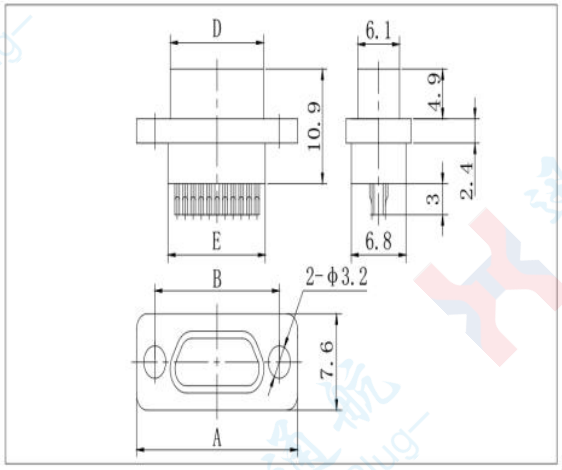

J30J-9 ~ 37ZKS

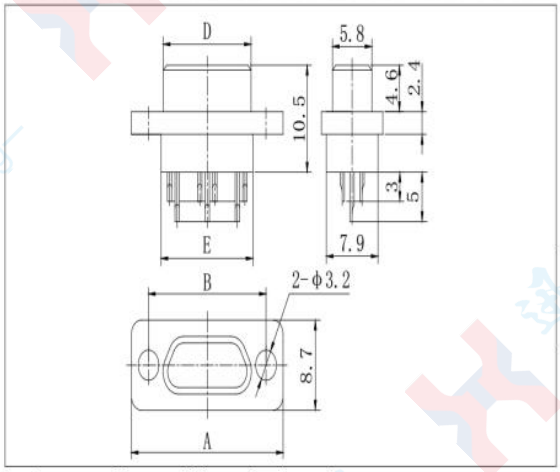

J30J-51 ~ 66TJS

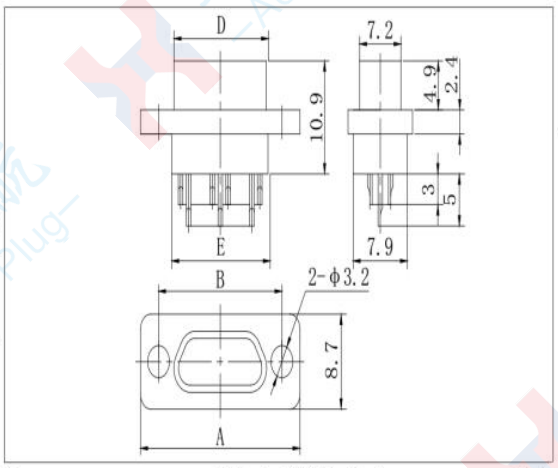

J30J-51 ~ 66ZKS

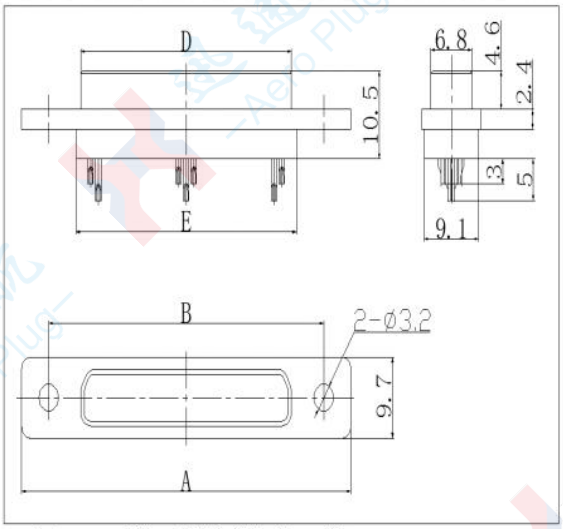

J30J-74 ~ 100TJS

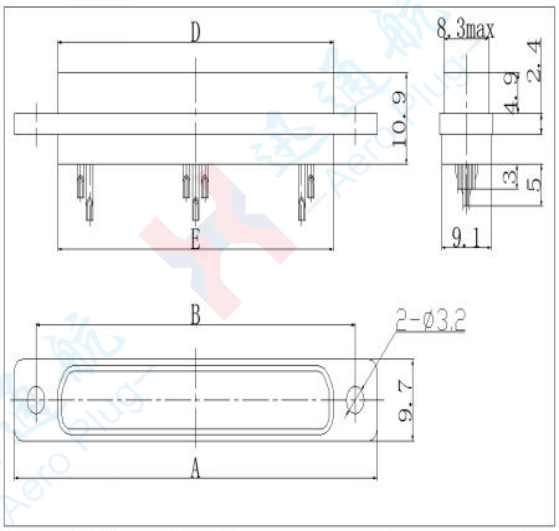

J30J-74 ~ 100ZKS

J30J Welding Basic Type J30J-TJS & J30J-ZKS

Order mark	A	B	D		E
J30J-9TJS/ZKS	19.6	14.3	8.3 (TJS)	9.8 (ZKS)	9.9
J30J-15TJS/ZKS	23.5	18.2	12.3 (TJS)	13.7 (ZKS)	13.8
J30J-21TJS/ZKS	27.4	22	16 (TJS)	17.4 (ZKS)	17.6
J30J-25TJS/ZKS	29.8	24.5	18.6 (TJS)	20 (ZKS)	20.2
J30J-31TJS/ZKS	33.6	28.3	22.4 (TJS)	23.8 (ZKS)	24
J30J-37TJS/ZKS	37.4	32.2	26.3 (TJS)	27.7 (ZKS)	27.8
J30J-51TJS/ZKS	36.4	30.86	25 (TJS)	26.5 (ZKS)	26.6
J30J-66TJS/ZKS	42.9	37.3	31.4 (TJS)	32.9 (ZKS)	33
J30J-74TJS/ZKS	38.8	33.5	27.5 (TJS)	29 (ZKS)	29.1
J30J-100TJS/ZKS	54.7	45.7	35 (TJS)	36.6 (ZKS)	36.6

Outline Drawing of the Product After Mating (A3 Type Wire Clamp Assembly Dimensions Not Included)

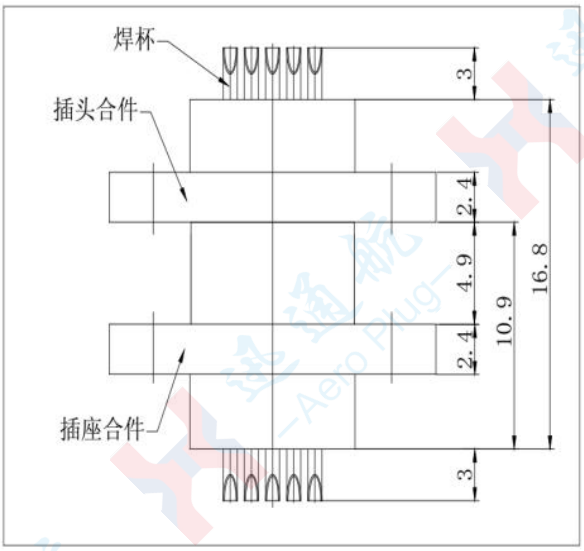

J30J-9～37 Contacts

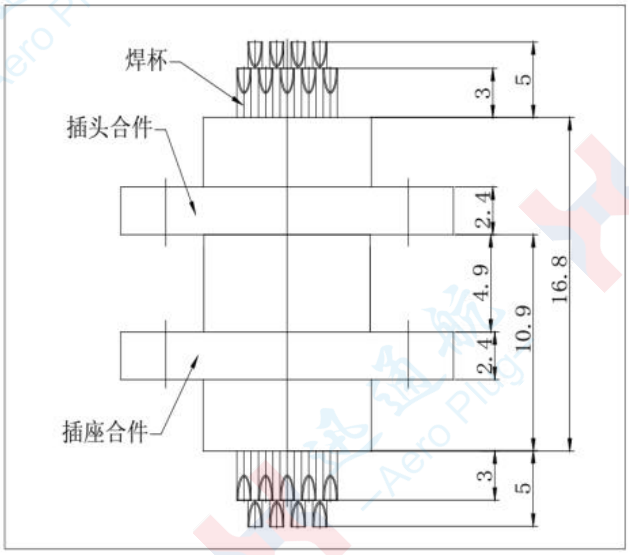

J30J-51～100 Contacts

Dimensions of A3 Type Wire Clamp Assembly

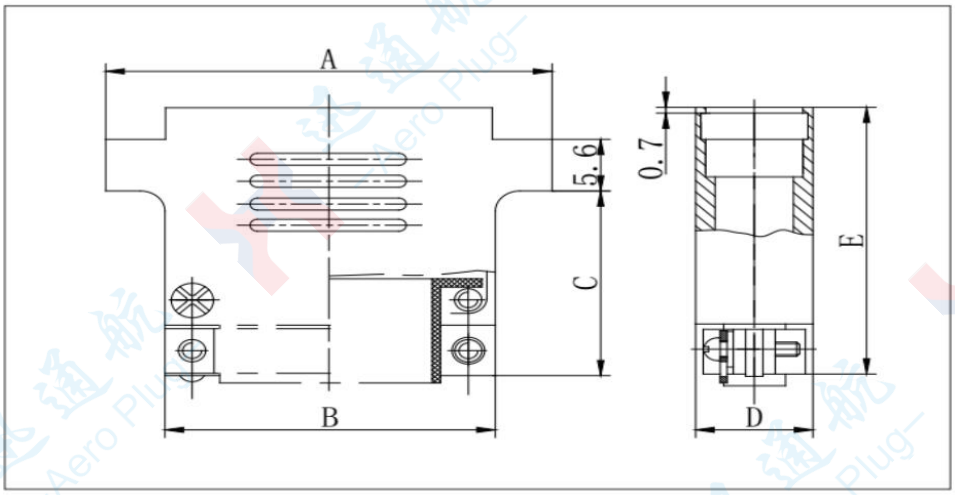

Series Spectrum	A	B	C	D	E	Series Spectrum	A	B	C	D	E
9-Core	19.6	9.9	18.2	10.4	27	37-Core	37.4	27.8	19.2	10.4	28
15-Core	23.5	13.8	18.2	10.4	27	51-Core	36.4	26.6	21.2	11.2	30
21-core	27.4	17.6	19.2	10.4	28	66-Core	42.9	33	21.2	11.2	30
25-Core	29.8	20.2	19.2	10.4	28	74-Core	38.8	29.1	21.2	12	30
31-Core	33.6	24	19.2	10.4	28	100-Core	54.7	40.7	21.2	12	30

J30JA Quick-Lock Crimp Expansion Type \ J30JA-TJ & J30JA-ZK

Plug

J30JA-9、15、21、25、31、37、51、66、74、100TJ

Product Stereogram

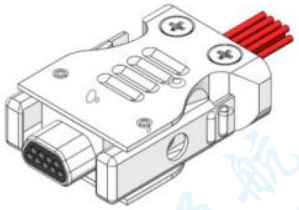

J30JA-9TJ

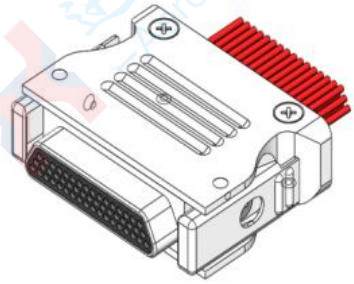

J30JA-51TJ

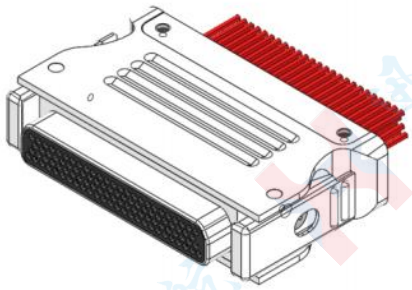

J30JA-100TJ

Socket

J30JA-9、15、21、25、31、37、51、66、74、100ZK

Product Stereogram

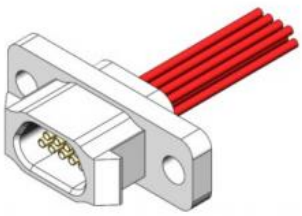

J30JA-9ZK

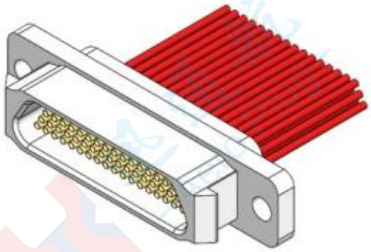

J30JA-51ZK

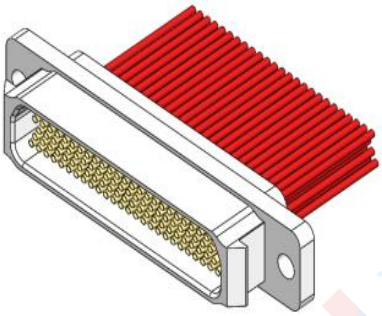

J30JA-100ZK

Product Overall Dimensions

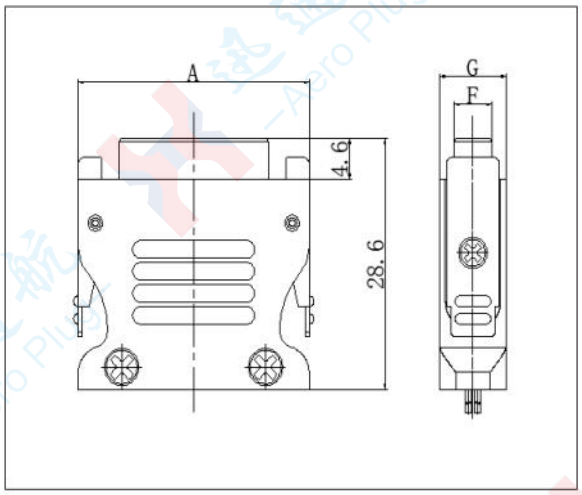

J30JA-□TJ

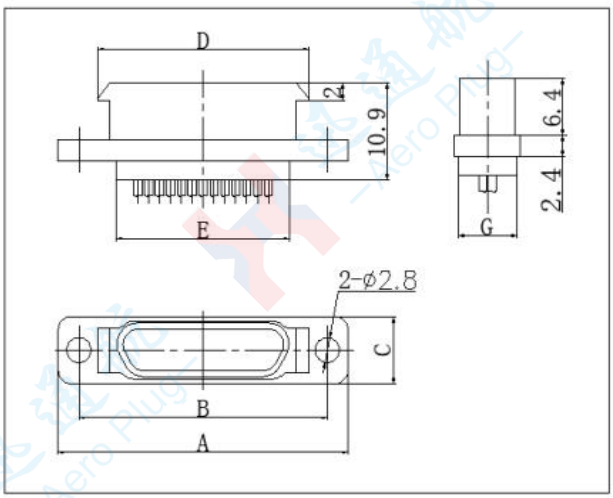

J30JA-□ZK

J30JA Quick-Lock Crimp Expansion Type J30JA-TJ & J30JA-ZK

Order mark	A	D	F	G	Order mark	A	B	C	D	E	F	G
J30JA-9TJ	18.2	8.4	4.7	8.1	J30JA-9ZK	23.4	18.6	7.6	14.3	9.9	6.5	6.8
J30JA-15TJ	22.1	12.3	4.7	8.1	J30JA-15ZK	27.4	22.6	7.6	18.3	13.8	6.5	6.8
J30JA-21TJ	25.8	16	4.7	8.1	J30JA-21ZK	31.1	26.3	7.6	22	17.6	6.5	6.8
J30JA-25TJ	28.4	18.6	4.7	8.1	J30JA-25ZK	33.7	28.9	7.6	24.6	20.2	6.5	6.8
J30JA-31TJ	32.2	22.4	4.7	8.1	J30JA-31ZK	37.5	32.7	7.6	28.4	24	6.5	6.8
J30JA-37TJ	36	26.3	4.7	8.1	J30JA-37ZK	41.4	36.6	7.6	32.3	27.8	6.5	6.8
J30JA-51TJ	34.8	25	5.8	10	J30JA-51ZK	40.1	35.3	8.7	31	26.6	7.6	7.9
J30JA-66TJ	41.2	31.4	5.8	10	J30JA-66ZK	46.5	41.7	8.7	37.4	33	7.6	7.9
J30JA-74TJ	37.3	27.5	6.8	11	J30JA-74ZK	42.6	37.8	9.8	33.5	29.1	8.7	9.1
J30JA-100TJ	44.8	35	6.8	11	J30JA-100ZK	50.1	45.3	9.8	41	36.6	8.7	9.1
J30JA-144TJ	58.8	49	6.8	11	J30JA-144ZK	64.1	59.3	9.8	55	50.6	8.7	9.1

Overall Dimensions of the Product After Mating

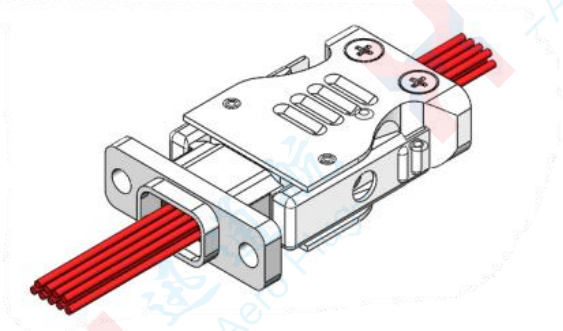

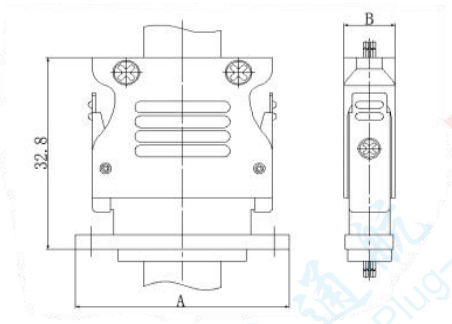

Series Spectrum	A	B	Series Spectrum	A	B
J30JA-9TJ/ZK	23.4	8.1	J30JA-51TJ/ZK	40.1	10
J30JA-15TJ/ZK	27.4	8.1	J30JA-66TJ/ZK	46.5	10
J30JA-21TJ/ZK	31.1	8.1	J30JA-74TJ/ZK	42.6	11
J30JA-25TJ/ZK	33.7	8.1	J30JA-100TJ/ZK	50.1	11
J30JA-31TJ/ZK	37.5	8.1	J30JA-144TJ/ZK	64.1	11
J30JA-37TJ/ZK	41.4	8.1			

J30JA Insertion Printed Circuit Board Expansion Type \ J30JA-ZKN

The tail end of the contact is in straight insertion connection with the printed circuit board, and the grid size is 2.54×2.54 (Column × Row).

.Socket

.J30JA-9、15、21、25、31、37、51、66ZKN

Product Stereogram

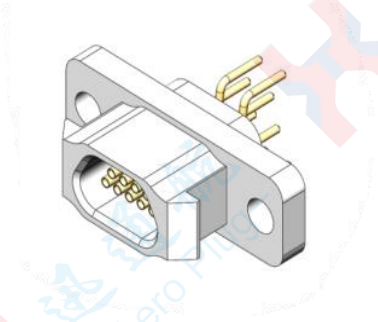

J30JA-9ZKN

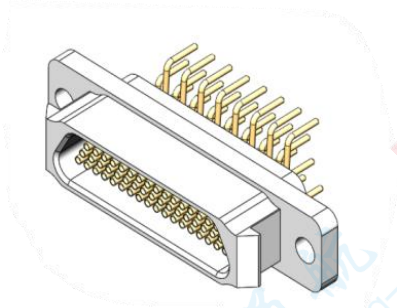

J30JA-51ZKN

Product Overall Dimensions

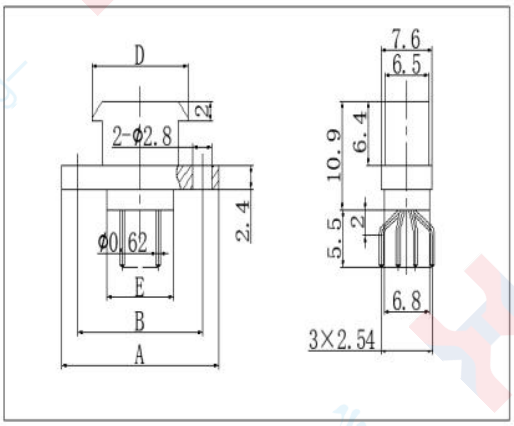

J30JA-9、37ZKN

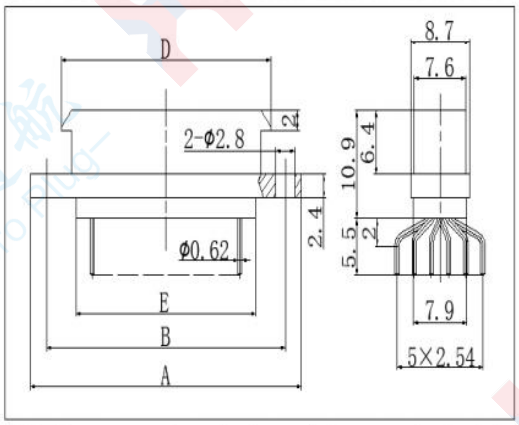

J30JA-51、66ZKN

J30JA Insertion Printed Circuit Board Expansion Type \ J30JA-ZKN

Order mark	A	B	D	E
J30JA-9ZKN	23.4	18.6	14.3	9.8
J30JA-15ZKN	27.4	22.6	18.3	13.8
J30JA-21ZKN	31.1	26.3	22	17.6
J30JA-25ZKN	33.7	28.9	24.6	20.2
J30JA-31ZKN	37.5	32.7	28.4	24
J30JA-37ZKN	41.1	36.6	32.3	27.8
J30JA-51ZKN	40.1	35.3	31	26.6
J30JA-66ZKN	46.5	41.7	37.4	33

Overall Dimensions of Mated Products

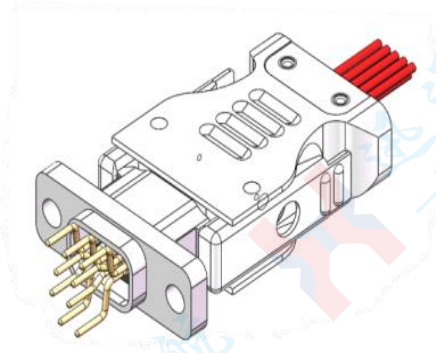

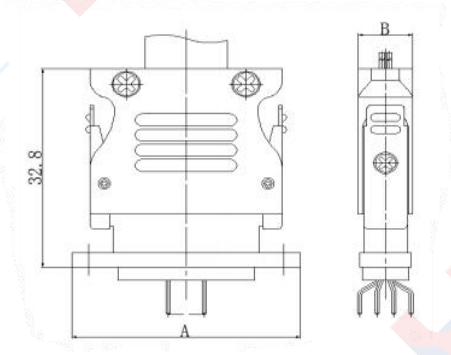

Series Spectrum	A	B	Series Spectrum	A	B
J30JA-9TJ/ZKN	23.4	8.1	J30JA-51TJ/ZKN	40.1	10
J30JA-15TJ/ZKN	27.4	8.1	J30JA-66TJ/ZKN	46.5	10
J30JA-21TJ/ZKN	31.1	8.1			
J30JA-25TJ/ZKN	33.7	8.1			
J30JA-31TJ/ZKN	37.5	8.1			
J30JA-37TJ/ZKN	41.4	8.1			

J30JA Insertion Printed Circuit Board Expansion Type \ J30JA-ZKW

The tail end of the contact is in bent insertion connection with the printed circuit board, and the grid size is 2.54×2.54 (Column × Row).

.Socket

.J30JA-9、15、21、25、31、37、51、66ZKW

Product Stereogram

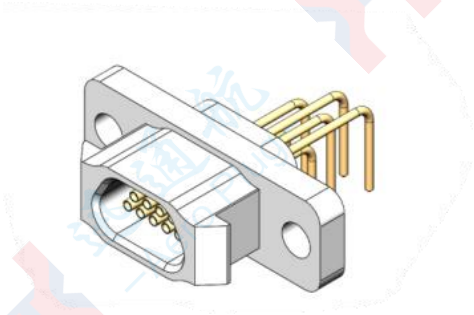

J30JA-9ZKW

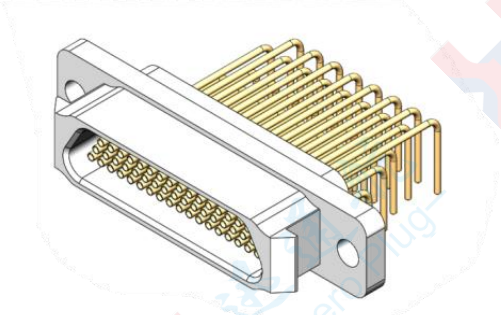

J30JA-51ZKW

Product Overall Dimensions

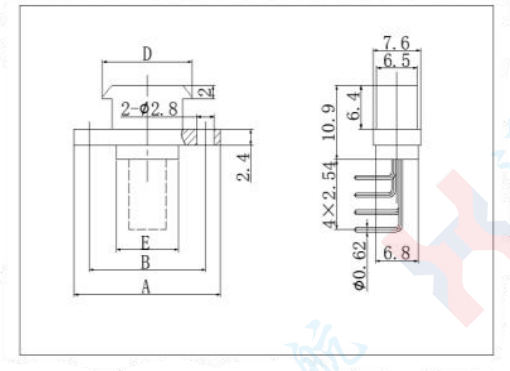

J30JA-9～37ZKW

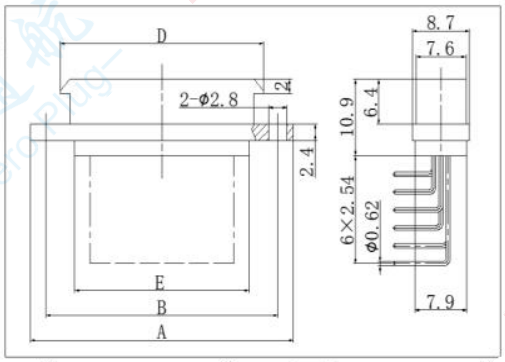

J30JA-51、66ZKW

J30JA Insertion Printed Circuit Board Expansion Type \ J30JA-ZKW

order mark	A	B	D	E
J30JA-9ZKW	23.4	18.6	14.3	9.9
J30JA-15ZKW	27.4	22.6	8.3	13.8
J30JA-21ZKW	31.1	26.3	22	17.6
J30JA-25ZKW	33.7	28.9	24.6	20.2
J30JA-31ZKW	37.5	32.7	28.4	24
J30JA-37ZKW	41.1	36.6	32.3	27.8
J30JA-51ZKW	40.1	35.3	31	26.6
J30JA-66ZKW	46.5	41.7	37.4	33

Overall Dimensions of Mated Products

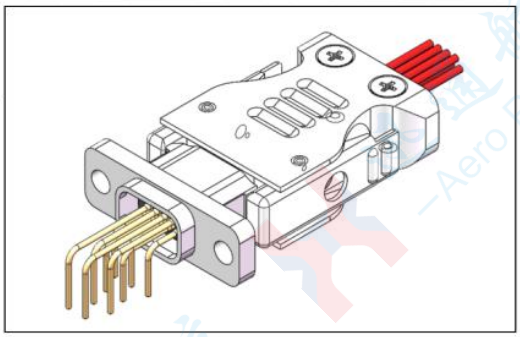

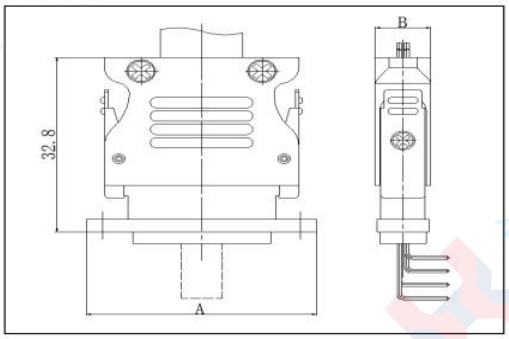

Series Spectrum	A	B	Series Spectrum	A	B
J30JA-9TJ/ZKW	23.4	8.1	J30JA-51TJ/ZKW	40.1	10
J30JA-15TJ/ZKW	27.4	8.1	J30JA-66TJ/ZKW	46.5	10
J30JA-21TJ/ZKW	31.1	8.1			
J30JA-25TJ/ZKW	33.7	8.1			
J30JA-31TJ/ZKW	37.5	8.1			
J30JA-37TJ/ZKW	41.4	8.1			

J30JA Insertion Printed Circuit Board Expansion Type \ J30JA-ZKN-J

The tail end of the contact is in straight insertion connection with the printed circuit board, and the grid size is 1.27×2.54 (Column × Row).

.Socket

.J30JA-9、15、21、25、31、37、51、66、74、100ZKN-J

Product Stereogram

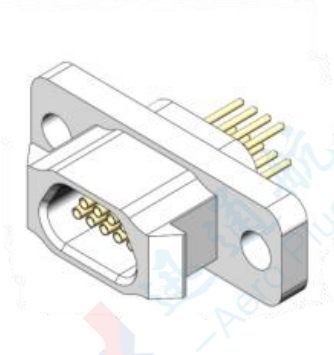

J30JA-9ZKN-J

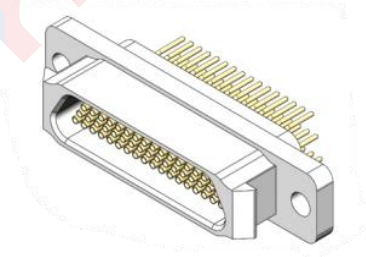

J30JA-51ZKN-J

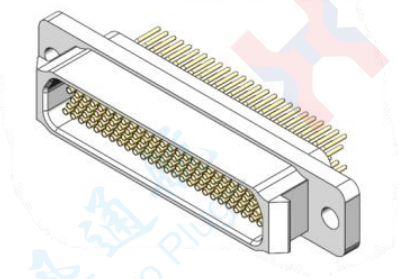

J30JA-66ZKN-J

Product Overall Dimensions

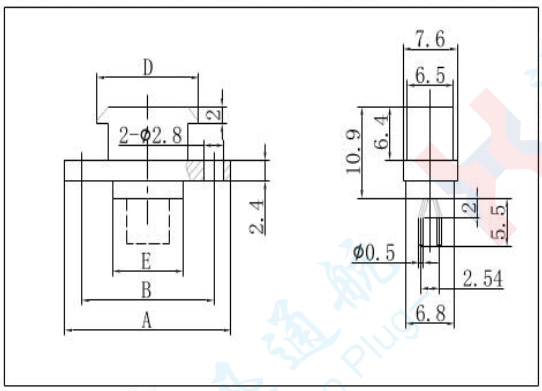

J30JA-9～37ZKN-J

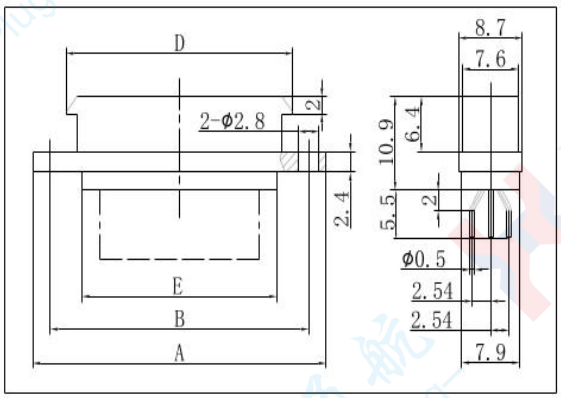

J30JA-51、66ZKN-J

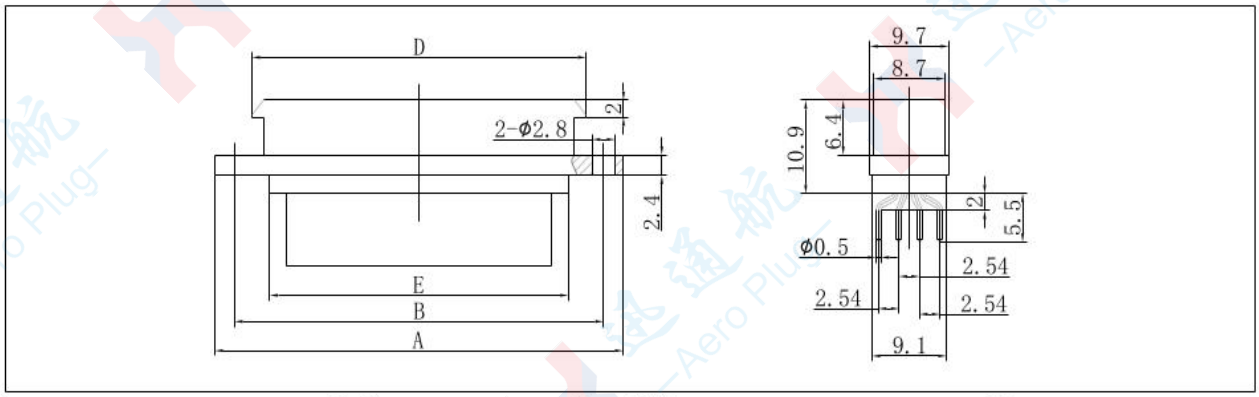

J30JA-74、100ZKN-J

J30JA Insertion Printed Circuit Board Expansion Type J30JA-ZKN-J

Order mark	A	B	D	E
J30JA-9ZKN-J	23.4	18.6	14.3	9.9
J30JA-15ZKN-J	27. 4	22.6	18.3	13.8
J30JA-21ZKN-J	31.1	26.3	22	17.6
J30JA-25ZKN-J	33.7	28.9	24.6	20.2
J30JA-31ZKN-J	37.5	32.7	28.4	24
J30JA-37ZKN-J	41.1	36.6	32.3	27.8
J30JA-51ZKN-J	40.1	35.3	31	26.6
J30JA-66ZKN-J	46.5	41.7	37.4	33
J30JA-74ZKN-J	42.6	37.8	33.5	29.1
J30JA-100ZKN-J	50.1	45.3	41	36.6

Overall Dimensions of Mated Products

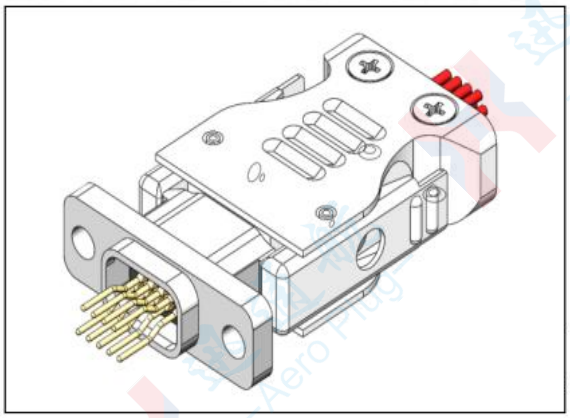

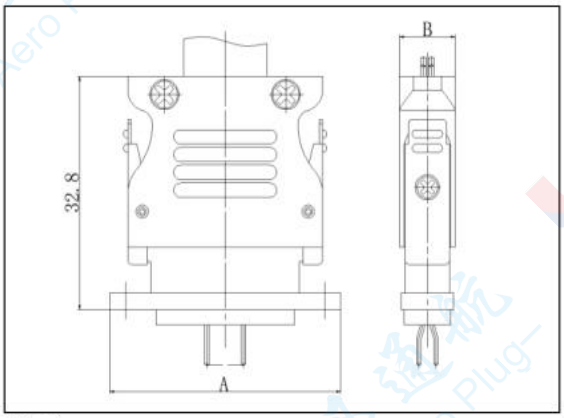

Series Spectrum	A	B	Series Spectrum	A	B
J30JA-9TJ/ZKN-J	23.4	8.1	J30JA-51TJ/ZKN-J	40.1	10
J30JA-15TJ/ZKN-J	27.4	8.1	J30JA-66TJ/ZKN-J	46.5	10
J30JA-21TJ/ZKN-J	31.1	8.1	J30JA-74TJ/ZKN-J	42.6	11
J30JA-25TJ/ZKN-J	33.7	8.1	J30JA-100TJ/ZKN-J	50.1	11
J30JA-31TJ/ZKN-J	37.5	8.1			
J30JA-37TJ/ZKN-J	41.4	8.1			

J30JA Insertion Printed Circuit Board Expansion Type \ J30JA-ZKW-J

The tail end of the contact is in bent insertion connection with the printed circuit board, and the grid size is 1.27×2.54 (Column × Row).

.Socket

.J30JA-9、15、21、25、31、37、51、66、74、100ZKW-J

Product Stereogram

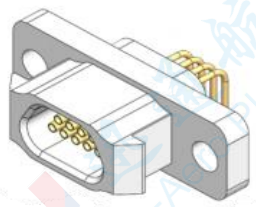

J30JA-9ZKW-J

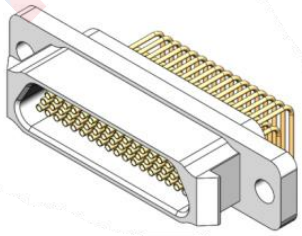

J30JA-51ZKW-J

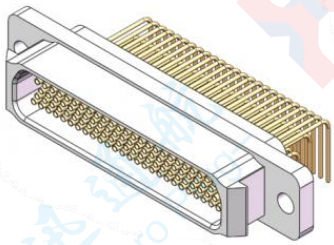

J30JA-100ZKW-J

Product Overall Dimensions

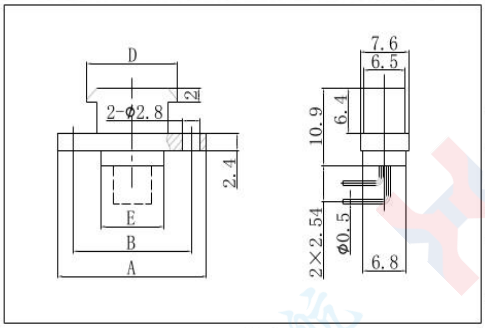

J30JA-9～37ZKW-J

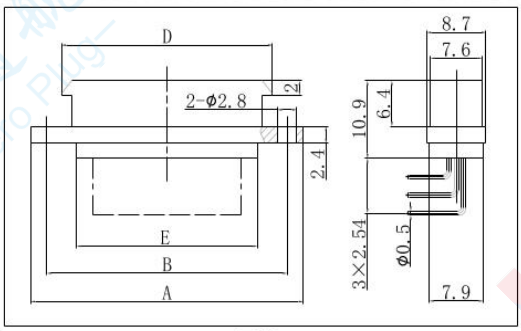

J30JA-51、66ZKW-J

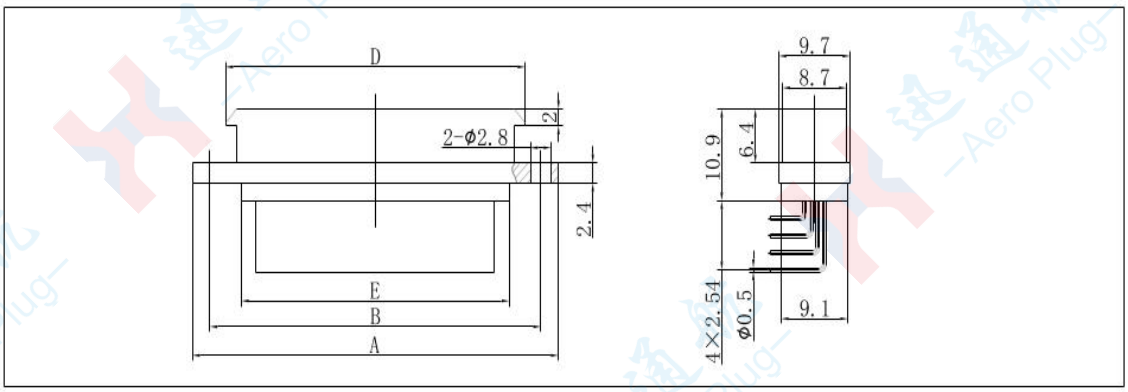

J30JA-74、100ZKW

J30JA Insertion Printed Circuit Board Expansion Type J30JA-ZKW-J

order mark	A	B	D	E
J30JA-9ZKW-J	23.4	18.6	14.3	9.9
J30JA-15ZKW-J	27. 4	22.6	18.3	13.8
J30JA-21ZKW-J	31.1	26.3	22	17.6
J30JA-25ZKW-J	33.7	28.9	24.6	20.2
J30JA-31ZKW-J	37.5	32.7	28.4	24
J30JA-37ZKW-J	41.1	36.6	32.3	27.8
J30JA-51ZKW-J	40.1	35.3	31	26.6
J30JA-66ZKW-J	46.5	41.7	37.4	33
J30JA-74ZKW-J	42.6	37.8	33.5	29.1
J30JA-100ZKW-J	50.1	45.3	41	36.6

Overall Dimensions of Mated Products

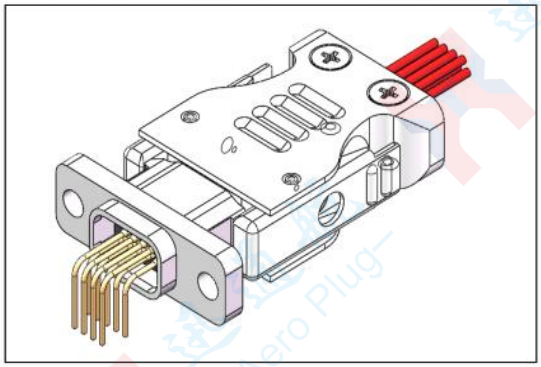

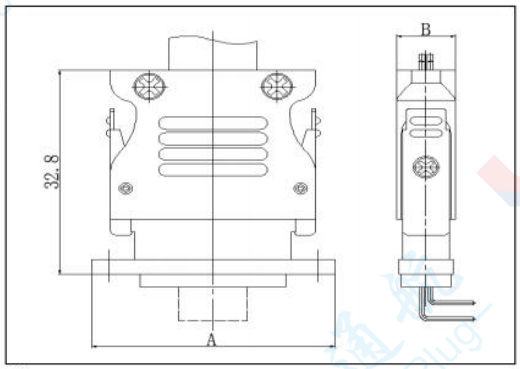

Series Spectrum	A	B	Series Spectrum	A	B
J30JA-9TJ/ZKW-J	23.4	8.1	J30JA-51TJ/ZKW-J	40.1	10
J30JA-15TJ/ZKW-J	27.4	8.1	J30JA-66TJ/ZKW-J	46.5	10
J30JA-21TJ/ZKW-J	31.1	8.1	J30JA-74TJ/ZKW-J	42.6	11
J30JA-25TJ/ZKW-J	33.7	8.1	J30JA-100TJ/ZKW-J	50.1	11
J30JA-31TJ/ZKW-J	37.5	8.1			
J30JA-37TJ/ZKW-J	41.4	8.1			

J30JD Crimp Expansion Type \ J30JD-TJ & J30JD-ZK

.Plug

.J30JD-9、15、21、25、31、37、51、66、74、100TJ

Product Stereogram

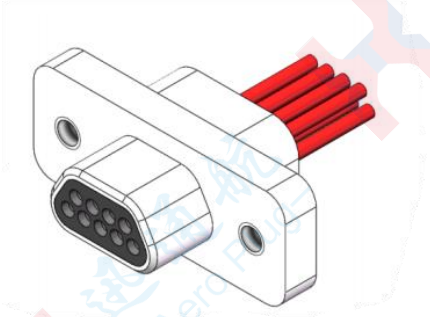

J30JD-9TJ

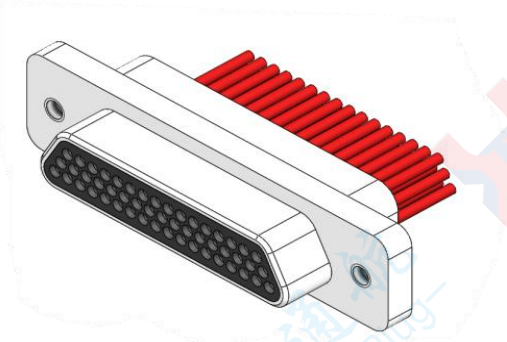

J30JD-51TJ

.Socket

.J30JD-9、15、21、25、31、37、51、66、74、100ZK

Product Stereogram

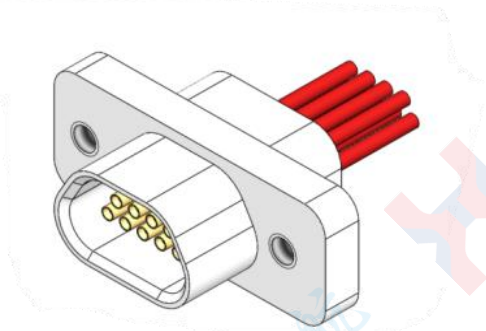

J30JD-9ZK

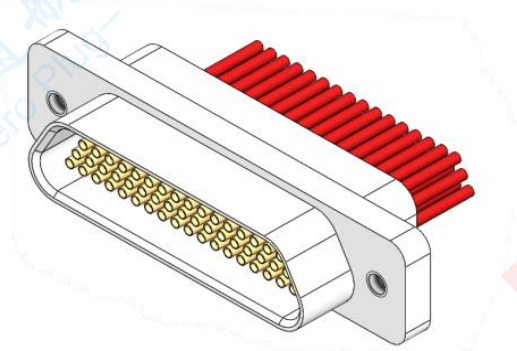

J30JD-51ZK

Product Outline Drawing

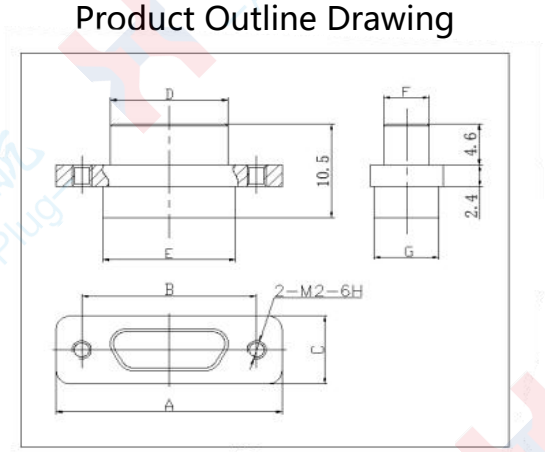

J30JD-□TJ

Product Outline Drawing

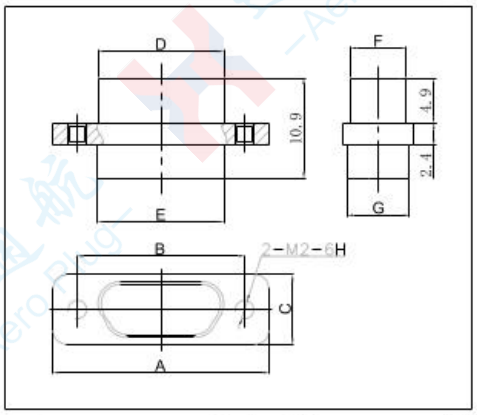

J30JD-□ZK

J30JD Crimp Expansion Type \ J30JD-TJ & J30JD-ZK

Order mark	A	B	C	D	E	F	G
J30JD-9TJ	19.6	14.3	7.6	8.3	9.9	4.7	6.8
J30JD-15TJ	23.5	18.2	7.6	12.3	13.8	4.7	6.8
J30JD-21TJ	27.4	22	7.6	16	17.6	4.7	6.8
J30JD-25TJ	29.8	24.5	7.6	18.6	20.2	4.7	6.8
J30JD-31TJ	33.6	28.3	7.6	22.4	24	4.7	6.8
J30JD-37TJ	37.4	32.2	7.6	26.3	27.8	4.7	6.8
J30JD-51TJ	36.4	30.86	8.7	25	26.6	5.8	7.9
J30JD-66TJ	42.9	37.3	8.7	31.4	33	5.8	7.9
J30JD-74TJ	38.8	33.5	9.7	27.5	29.1	6.8	9.1
J30JD-100TJ	54.7	45.7	9.7	35	36.6	6.8	9.1
J30JD-9ZK	19.6	14.3	7.6	9.8	9.9	6.1	6.8
J30JD-15ZK	23.5	18.2	7.6	13.7	13.8	6.1	6.8
J30JD-21ZK	27.4	22	7.6	17.4	17.6	6.1	6.8
J30JD-25ZK	29.8	24.5	7.6	20	20.2	6.1	6.8
J30JD-31ZK	33.6	28.3	7.6	23.8	24	6.1	6.8
J30JD-37ZK	37.4	32.2	7.6	27.7	27.8	6.1	6.8
J30JD-51ZK	36.4	30.86	8.7	26.5	26.6	7.2	7.9
J30JD-66ZK	42.9	37.3	8.7	32.9	33	7.2	7.9
J30JD-74ZK	38.8	33.5	9.7	29	29.1	8.3	9.1
J30JD-100ZK	54.7	45.7	9.7	36.6	36.65	8.2	9.1

Overall Dimensions of Mated Products

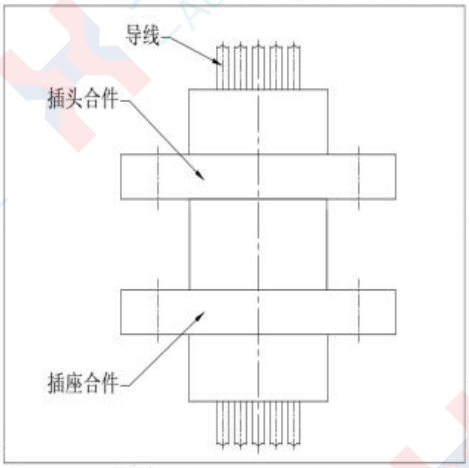

front view

Overall Dimensions of Mated Products

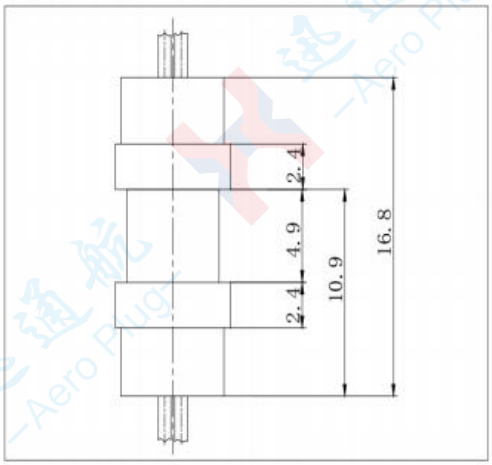

Left View

J30JM Glue-Sealed Crimp Type \ J30JM-ZK

J30J sealed products: except for the insulation resistance (≥2000MΩ) which is different from that specified for J30J ordinary products, all other performance indicators are exactly the same as those of J30J. Additionally, an air leakage rate indicator is added, which is 5.0×10^{-2} Pa·cm³/s.

Sockets J30JM-9, 15, 21, 25, 31, 37, 51, 66, 74, 100ZK

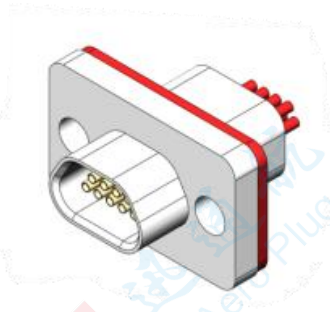

J30JM-9ZK

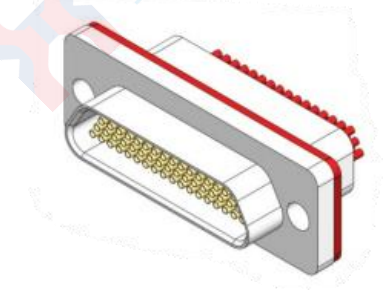

J30JM-51ZK

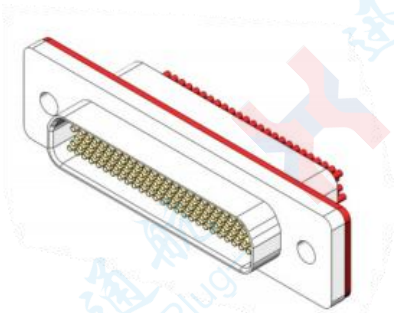

J30JM-100ZK

Product external dimension drawing

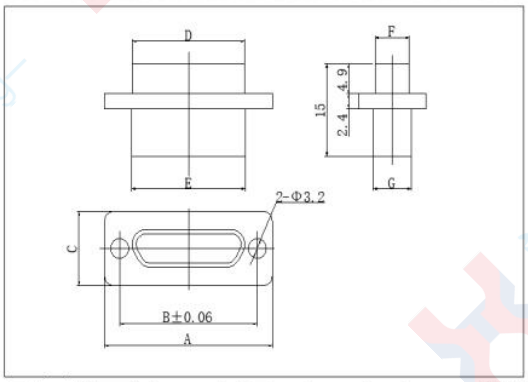

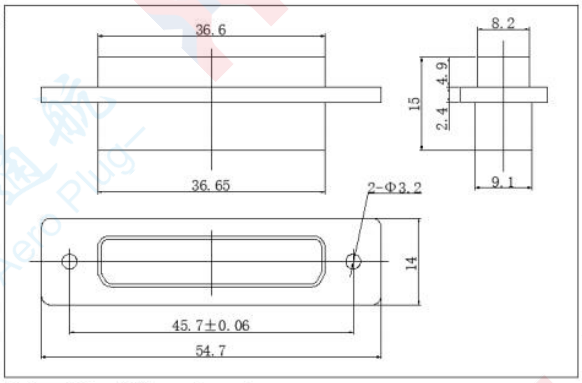

Note: The thickness of the gaskets installed on the product's flange (refer to the product's 3D drawing) is all 1mm.

J30JM Glue-Sealed Crimp Type J30JM-ZK

Order mark	A	B	C	D	E	F	G
J30JM-9ZK	19.6	14.3	12	9.8	9.9	6.1	6.8
J30JM-15ZK	23.5	18.2	12	13.7	13.8	6.1	6.8
J30JM-21ZK	27.4	22	12	17.4	17.6	6.1	6.8
J30JM-25ZK	29.8	24.5	12	20	20.2	6.1	6.8
J30JM-31ZK	33.6	28.3	12	23.8	24	6.1	6.8
J30JM-37ZK	37.4	32.2	12	27.7	27.8	6.1	6.8
J30JM-51ZK	36.4	30.86	13	26.5	26.6	7.2	7.9
J30JM-66ZK	42.9	37.3	13	32.9	33	7.2	7.9
J30JM-74ZK	38.8	33.5	14	29	29.1	8.3	9.1
J30JM-100ZK	54.7	45.7	14	36.6	36.65	8.2	9.1

J30JM Glue-Sealed Crimp Type \ J30JM-ZKS

J30J sealed welded products, like the J30JM-ZK crimp basic type, have performance indicators that are identical to those of J30J except for the insulation resistance (≥2000MΩ), which differs from the specifications for J30J ordinary products. An additional air leakage rate indicator is included, with a value of 5.0×10^{-2} Pa·cm³/s.

.Socket J30JM-9、15、21、25、31、37、51、66、74、100ZKS

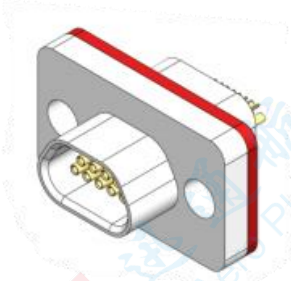

J30JM-9ZKS

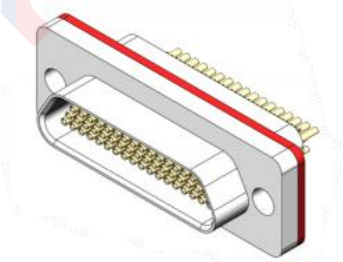

J30JM-51ZKS

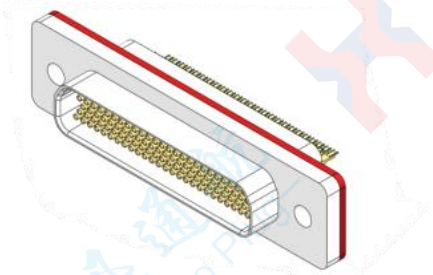

J30JM-100ZKS

Product Outline Dimension Drawing

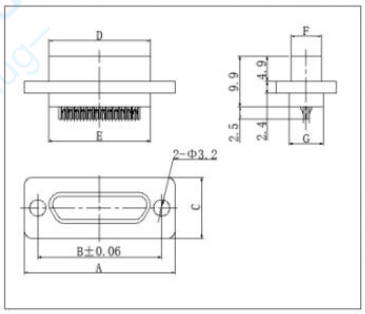

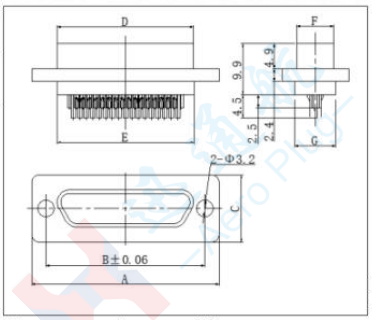

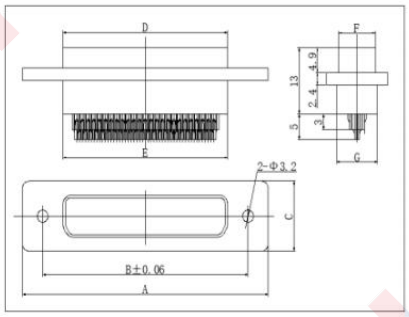

Note: The gaskets installed on the product's flange (refer to the product's 3D drawing) all have a thickness of 1mm.

J30JM Glue-Sealed Crimp Type \ J30JM-ZKS

Order mark	A	B	C	D	E	F	G
J30JM-9ZKS	19.6	14.3	11.6	9.8	9.9	6.1	6.8
J30JM-15ZKS	23.5	18.2	11.6	13.7	13.8	6.1	6.8
J30JM-21ZKS	27.4	22	11.6	17.4	17.6	6.1	6.8
J30JM-25ZKS	29.8	24.5	11.6	20	20.2	6.1	6.8
J30JM-31ZKS	33.6	28.3	11.6	23.8	24	6.1	6.8
J30JM-37ZKS	37.4	32.2	11.6	27.7	27.8	6.1	6.8
J30JM-51ZKS	36.4	30.86	12.7	26.5	26.6	7.2	7.9
J30JM-66ZKS	42.9	37.3	12.7	32.9	33	7.2	7.9
J30JM-74ZKS	38.8	33.5	13.7	29	29.1	8.3	9.1
J30JM-100ZKS	54.7	45.7	13.7	36.6	36.65	8.2	9.1

J30JM1 Glass-Sintered Sealed Welded Type \ J30JM1-ZKS

This is a J30J product with higher sealing performance (note that only the socket end is sealed). It adopts a glass-sintered structure and is used in conjunction with ordinary J30J series plugs and locking components.

Executive Standard: Detailed Specification for J30JM1 Series Miniature Rectangular Sealed Electrical Connectors

Technical characteristics:

Insulation resistance: ≥ 1000 MΩ

Dielectric Withstand Voltage: 600 Vr.m.s

Contact Resistance: ≤ 30 mΩ

Air Leakage: ≤ 1×10^{-3}Pa.cm^3/s

The remaining technical indicators are exactly the same as those of the J30J.

This series of sealed electrical connectors is mainly used for front-panel mounting; other mounting methods require customization.

For front-panel mounting, the blind hole mounting method is recommended, and the preferred mounting screws are those such as P29, P36, P37, and P43 from the J30J series.

Sockets J30JM1-9、15、21、25、31、37、51ZKS

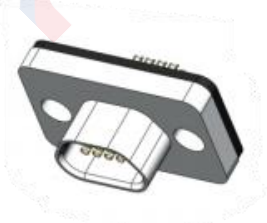

J30JM1-9ZKS

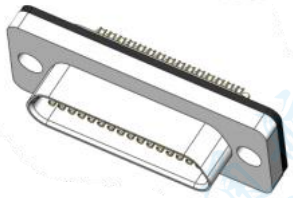

J30JM1-31ZKS

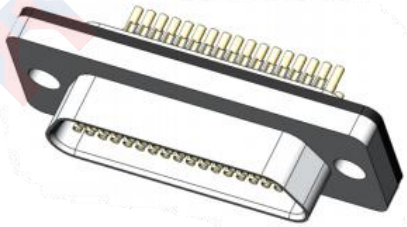

J30JM1-51ZKS

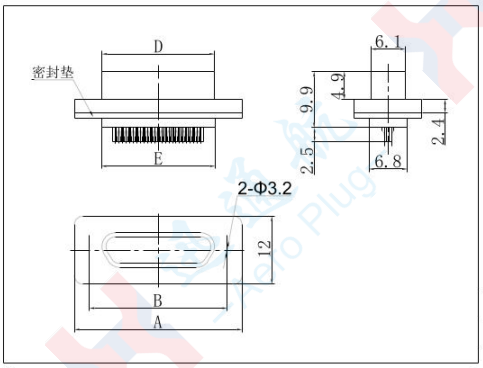

J30JM1-9～37ZKS

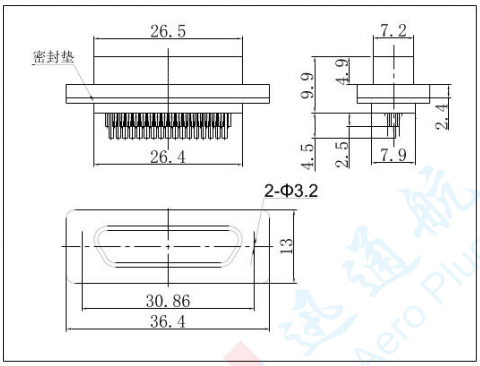

J30JM1-51ZKS

Order mark	A	B	D	E
J30JM1-9ZKS	19.6	14.3	9.8	9.7
J30JM1-15ZKS	23.5	18.2	13.7	13.6
J30JM1-21ZKS	27.4	22	17.4	17.4
J30JM1-25ZKS	29.8	24.5	20	20
J30JM1-37ZKS	33.6	28.3	23.8	23.8
J30JM1-51ZKS	37.4	32.2	27.7	27.6
	See the figure above			

Note: The rubber pads installed on the product's flange (see the product's 3D drawing) all have a thickness of 1mm.

J30JR Reverse Mounting Series \ J30JR-TK & J30JR-ZJ

Product features:

■This series of products features plugs with sockets and sockets with pins, which is exactly the opposite of J30J-TJ/ZK. The wire serial numbers (hole positions) are also reversed;

■This series of products come in the forms of crimped, soldered, through-hole printed circuit boards and bend-hole printed circuit boards. Their appearance is the same as that of the common basic type products;

■Users should select the locking components based on the installation method of the equipment and specify them in the order model. For specific instructions, please refer to the "Attachment Instructions".;

■Plug

■J30JR-9、15、21、25、31、37、51、66、74、100TK

Product Stereogram

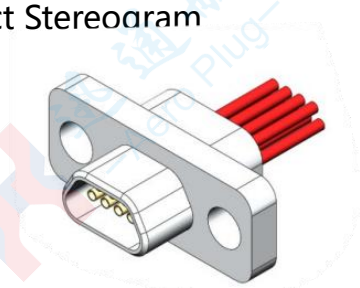

J30JR-9TK

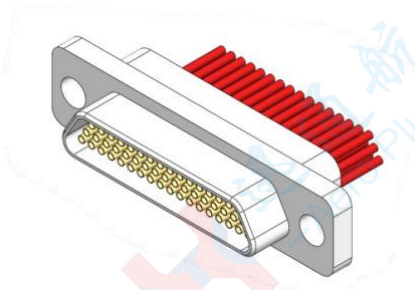

J30JR-51TK

■Socket

■J30JR-9、15、21、25、31、37、51、66、74、100ZJ

Product Stereogram

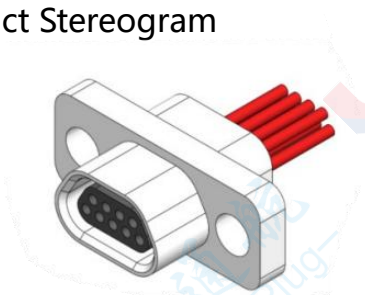

J30JR-9ZJ

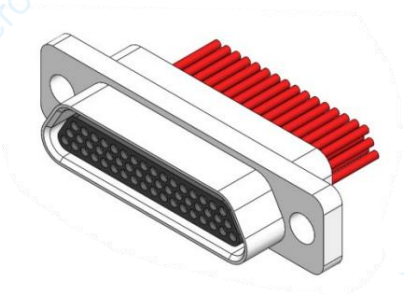

J30JR-51ZJ

Product Outline Dimension Drawing

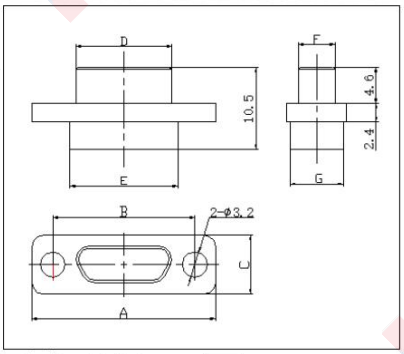

J30JR-□TK

Product Outline Dimension Drawing

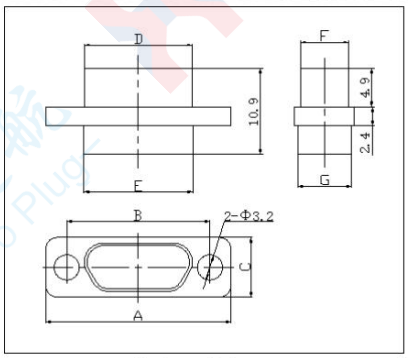

J30JR-□ZJ

J30JR Crimp Basic Type \ J30JR-TK & J30JR-ZJ

Order mark	A	B	C	D	E	F	G
J30JR-9TK	19.6	14.3	7.6	8.3	9.9	4.7	6.8
J30JR-15TK	23.5	18.2	7.6	12.3	13.8	4.7	6.8
J30JR-21TK	27.4	22	7.6	16	17.6	4.7	6.8
J30JR-25TK	29.8	24.5	7.6	18.6	20.2	4.7	6.8
J30JR-31TK	33.6	28.3	7.6	22.4	24	4.7	6.8
J30JR-37TK	37.4	32.2	7.6	26.3	27.8	4.7	6.8
J30JR-51TK	36.4	30.86	8.7	25	26.6	5.8	7.9
J30JR-66TK	42.9	37.3	8.7	31.4	33	5.8	7.9
J30JR-74TK	38.8	33.5	9.7	27.5	29.1	6.8	9.1
J30JR-100TK	54.7	45.7	9.7	35	36.6	6.8	9.1
J30JR-9ZJ	19.6	14.3	7.6	9.8	9.9	6.1	6.8
J30JR-15ZJ	23.5	18.2	7.6	13.7	13.8	6.1	6.8
J30JR-21ZJ	27.4	22	7.6	17.4	17.6	6.1	6.8
J30JR-25ZJ	29.8	24.5	7.6	20	20.2	6.1	6.8
J30JR-31ZJ	33.6	28.3	7.6	23.8	24	6.1	6.8
J30JR-37ZJ	37.4	32.2	7.6	27.7	27.8	6.1	6.8
J30JR-51ZJ	36.4	30.86	8.7	26.5	26.6	7.2	7.9
J30JR-66ZJ	42.9	37.3	8.7	32.9	33	7.2	7.9
J30JR-74ZJ	38.8	33.5	9.7	29	29.1	8.3	9.1
J30JR-100ZJ	54.7	45.7	9.7	36.6	36.65	8.2	9.1

External Dimensions of the Product After Mating

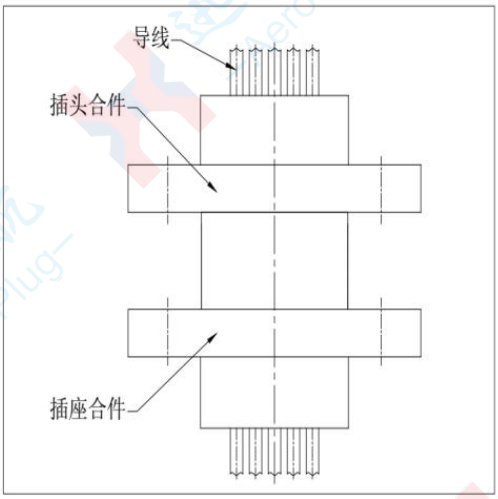

Front View

External Dimensions of the Product After Mating

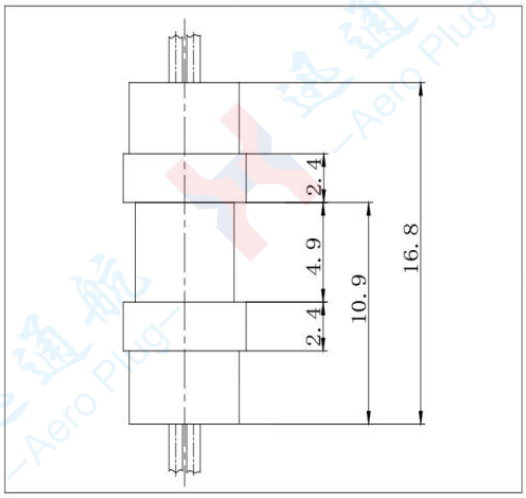

Left View

J30J Wire Clip Assembly \ Type A1 Wire Clip Assembly & Type A3 Wire Clip Assembly

.Type A1 wire clips can be used with J30J basic crimp series products, and the locking components equipped with the products should generally be free-end locking components.

.Type A3 wire clips are the default accessories for J30J basic welded S series products, and can also be used with J30J ordinary crimp series products.

.When Type A3 wire clips are used with J30J basic crimp series products, the product ordering codes are J30J-□TJ-A3 (plug) and J30J-□ZK-A3 (socket).

.When Type A3 wire clips are used with J30J basic welded S series products, the product ordering codes are J30J-□TJS (plug) and J30J-□ZKS (socket).

Product Stereogram

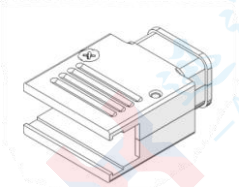

J30J-□A1

Product External Dimensions

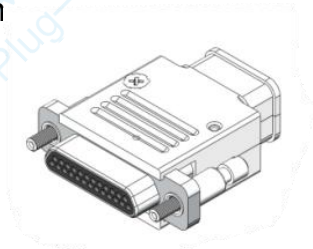

Assembly of the A1 line clamping piece and plug

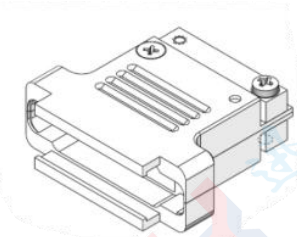

J30J-□A3

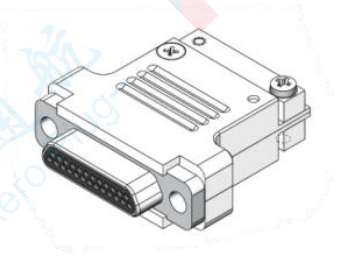

Assembly of Type A3 Wire Clip Assembly and Products

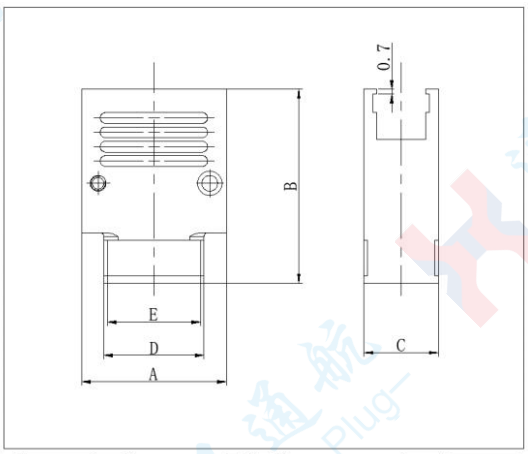

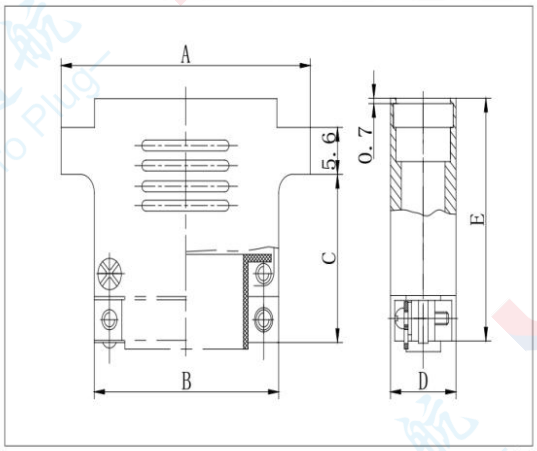

J30J-□ Type A1 Wire Clip Assembly J30J-□ Type A3 Wire Clip Assembly	A	B	C	D	E	Order mark	A	B	C	D	E
J30J-9A1	9.9	23.6	10.4	6	5	J30J-9A3	19.6	9.9	18.2	10.4	27
J30J-15A1	13.8	23.6	10.4	8.8	7.8	J30J-15A3	23.5	13.8	18.2	10.4	27
J30J-21A1	17.6	23.6	10.4	11.2	10.2	J30J-21A3	27.4	17.6	19.2	10.4	28
J30J-25A1	20.2	23.6	10.4	14	13	J30J-25A3	29.8	20.2	19.2	10.4	28
J30J-31A1	24	23.6	10.4	17.8	16.8	J30J-31A3	33.6	24	19.2	10.4	28
J30J-37A1	27.8	23.6	10.4	19.6	18.6	J30J-37A3	37.4	27.8	19.2	10.4	28
J30J-51A1	26.6	26.6	11.2	18.4	17.4	J30J-51A3	36.4	26.6	21.2	11.2	30
J30J-66A1	33	26.6	11.2	24.8	23.8	J30J-66A3	42.9	33	21.2	11.2	30
J30J-74A1	29.1	30	12	20.9	19.9	J30J-74A3	38.8	29.1	21.2	12	30
J30J-100A1	40.7	30	12	30.8	29.8	J30J-100A3	54.7	40.7	21.2	12	30

J30J Locking Assembly / J30J Free-End Locking Assembly

L-shaped locking assembly

Assembly Diagram

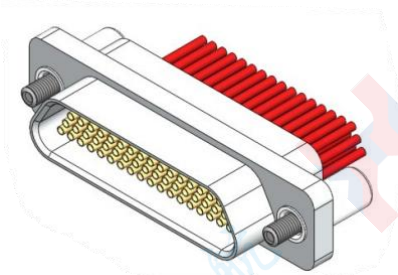

Product Overall Dimension Drawing

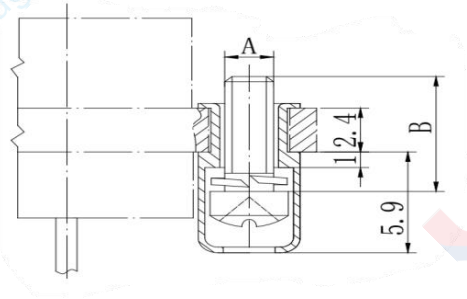

.Compatibility with L-Type Locking Assembly

J30J Free-End Locking Assembly	A	B	Compatible J30J Fixed-End Locking Assembly
L-shaped	M2-6h	7.1	P、P0、P2、P3、P4、P5、P7、P8、P9、P10、P11、P14、P15、P17、P23、P25、 P27、P29、P30、P32、P35、P36、P37、P40、P41、P42、P43、P45、P46 type

L7-Type Locking Assembly

L7 The L-shaped locking assembly is installed in the J30J-TJ/ZK basic model product, and after locking, the tail end of its screw is lower than the end face of the shell's tail end.

Assembly Diagram

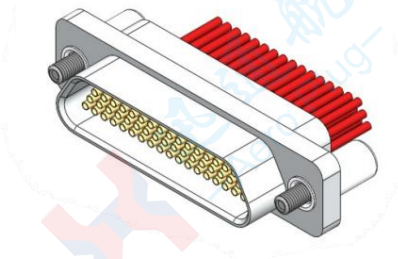

Product Overall Dimension Drawing

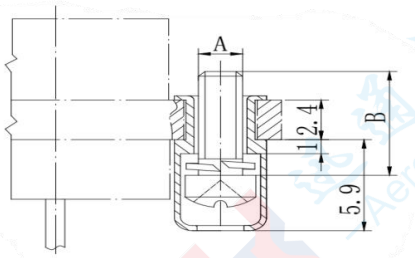

.L7-type locking assembly for matching use

J30J free-end locking assembly	Compatible J30J fixed-end locking assembly
L7-type	P、P0、P2、P3、P4、P5、P7、P8、P9、P10、P11、P14、 P15、P17、P23、P25、P27、P29、 P30、P32、P35、P36、P37、P40、P41、P42、P43、P45、P46 type

J30J locking assembly
.L9-type locking assembly

Assembly Diagram

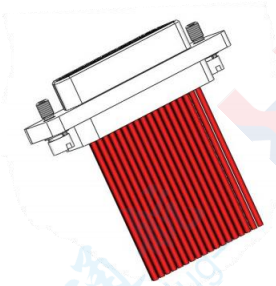

Product Outline Dimension Drawing

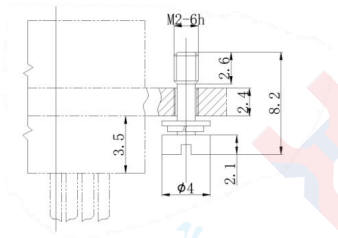

The L9 type locking assembly is applicable

J30J free-end locking assembly	Applicable Conditions and Matched J30J Fixed-End Locking Assemblies
Type L9	It can only be used with J30JD-type products. For portable use, it is recommended to be applied to cable-dropping products and matched with locking assemblies of types P, P0, P2, P3, P4, P5, P7, P8, P9, P10, P11, P14, P15, P17, P23, P25, P27, P29, P32, P35, P36, P37, P40, P41, P42, P43, P45 and P46.

J30J Locking Assembly
K-type Locking Assembly

Assembly Diagram

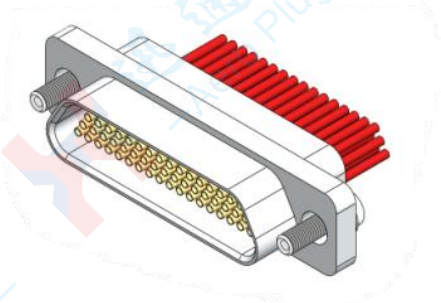

Product Outline Dimension Drawing

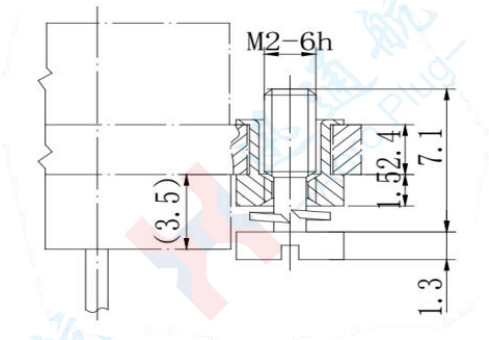

K-type Locking Assembly

J30J Free-end Locking Assembly	A	J30J-compatible Fixed-end Locking Component
K-type	M2-6h	Types P、P0、P2、P3、P4、P5、P7、P8、P9、P10、P11、P14、P15、P17、P23、P25、P27、 P29、P30、P32、P35、P36、P37、P40、P41、P42、P43、P45、P46

J30J locking assembly /J30J fixed-end locking assembly

.Types P, P8, and P9 locking assemblies are suitable for front-panel mounting.

Assembly Diagram

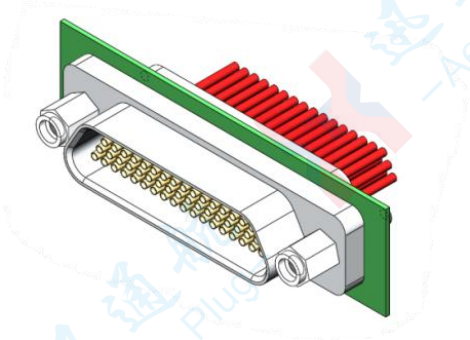

Product Outline Dimension Drawing

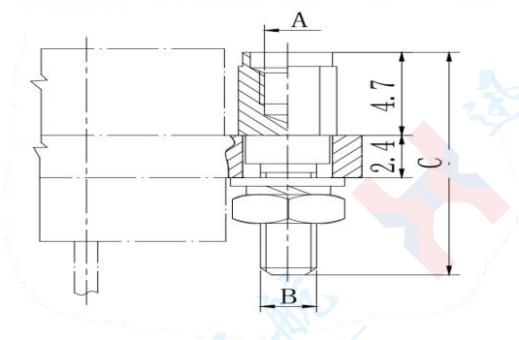

.To be matched with Types P, P8, and P9 locking assemblies

J30J Fixed-end Locking Assembly	A	B	C	Compatible J30J Free-end Locking Assembl
Type P	M2-6H	M2-6h	12.6	Types L、L7、L9、K
Type P8	M2-6H	M2-6h	15.6	Types L、L7、K
Type P9	M2-6H	M2-6h	21.6	Types L、L7、K

.Types P0, P3, P4, P11, and P45 locking assemblies are only suitable for rear-panel mounting.

Assembly Diagram

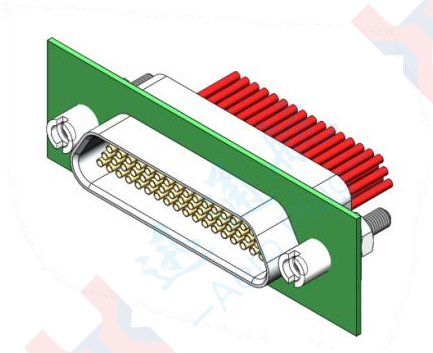

Product Outline Dimension Drawing

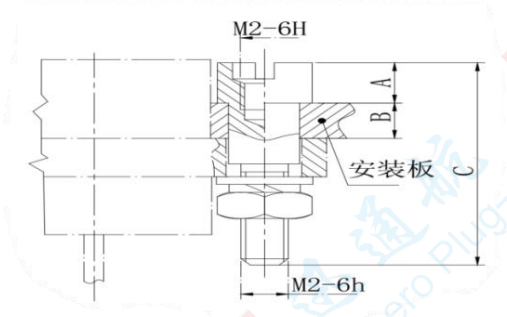

Compatibility and Outline Dimensions of P0, P3, P4, P11, and P45 Series Locking Assemblies

J30J Fixed-End Locking Assemblies	A	B	C	Compatible J30J Free-End Locking Assemblies
Type P0	4.1	0.6	12.6	Types L、L7、K
Type P3	3.3	1.4	12.6	Types L、L7、K
Type P4	2.5	2.2	12.6	Types L、L7、K
Type P11	1.3	3.4	12.6	Types L、L7、K
Type P45	2.7	2	20	Types L、L7、K

J30J Locking Assemblies / J30J Fixed-End Locking Assemblies / For J30JM Hermetically Sealed Products.

.The main fixed-end mounting screws for J30JM hermetically sealed products are Types P29, P36, P37, and P43 locking assemblies, which are suitable for front-panel mounting.

Assembly Diagram

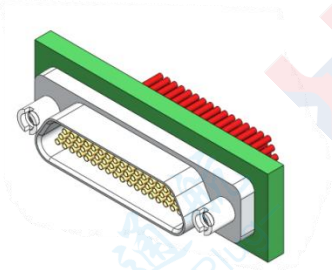

Product Outline Dimension Drawing

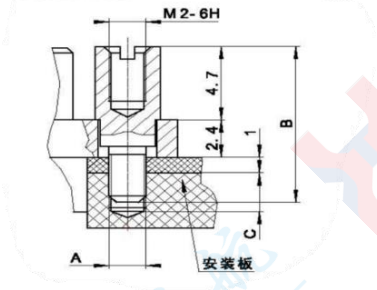

.Matching of Types P29, P36, P37, and P43 Locking Assemblies

J30J Fixed-End Locking Component	A	B	C	Compatible J30J Free-End Locking Assemblies
Type P29	M3-6h	10.5	3.3min	L、L7、L9、K Types
Type P36	M3-6h	14.7	7min	L、L7、L9、K Types
Type P37	M3-6h	10	2.8min	L、L7、L9、K Types
Type P43	M3-6h	11.7	4min	L、L7、L9、K Types

J30J Locking Assembl

.Right-Angle PCB Products are Compatible with Types P2, P14, P7, P42, P15, P35, and V1 Locking Assemblies

.Types P2 and P14 Locking Assemblies

.Types P2 and P14 Locking Assemblies are suitable for 90° right-angle PCB products with rear-panel mounting.

Assembly Diagram

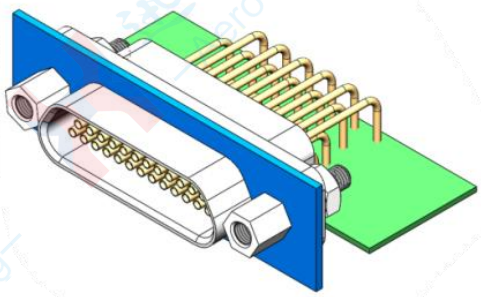

Product Outline Dimension Drawing

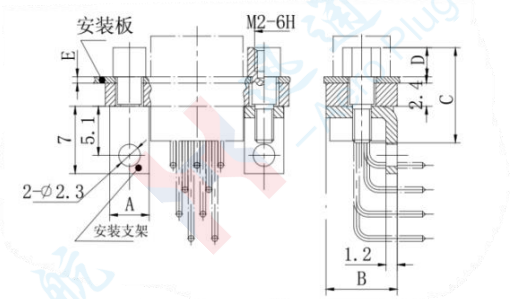

.Matching of Types P2 and P143 Locking Assemblies

Contact Counts of Products Compatible with Types P2 and P14 Fixed-End Locking Assemblies	A	B	C		D		E		Compatible J30J Free-End Locking Assemblies
			P2	P14	P2	P14	P2	P14	
9 ~ 37	4.2	7.6	11.6	10.7	3.7	1.7	1	3	L、L7、L9、K Types
51	4.2	8.7	11.6	10.7	3.7	1.7	1	3	L、L7、L9、K Types

J30J Locking Assemblies:

Right-angle PCB products are compatible with Types P7 and P42 Locking Assemblies.

Types P7 and P42 Locking Assemblies are only suitable for front-panel mounting of 90° right-angle PCB products.

Assembly Diagram

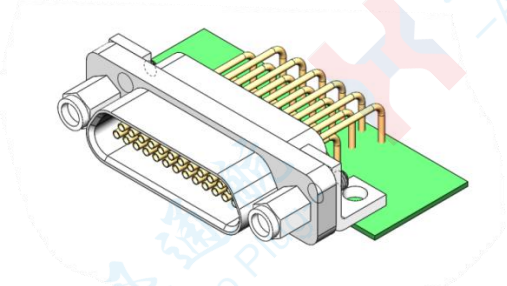

Product Outline Dimension Drawing

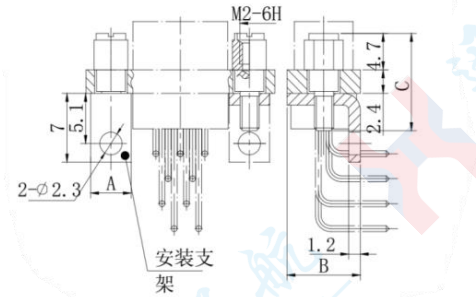

Core Counts of Products Compatible with Types P7 and P42 Locking Assemblies	A	B	C		Compatible J30J Free-End Locking Assemblies
			P7	P42	
9～37	4.2	7.6	10.7	9.7	L、L7、L9、K Types
51-66	4.2	8.7	10.7	9.7	
74	4.2	9.7	10.7	9.7	
100	8.8	9.7	10.7	9.7	

.Types P15 and P35 Locking Assemblies

.Types P15 and P35 Locking Assemblies are suitable for J30J-TJW-Q8/ZKW-Q8 right-angle PCB products with rear-panel mounting.

Assembly Diagram

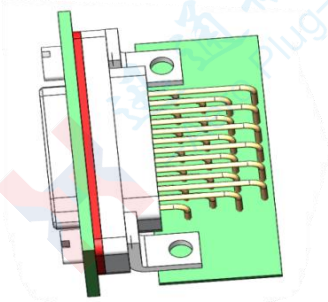

Product Outline Dimension Drawing

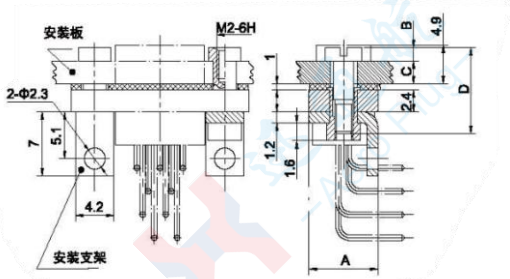

Core Counts of Products Compatible with Types P15 and P35 Fixed-End Locking Assemblies	A	B		C		D		Compatible J30J Free-End Locking Assemblies
		P15	P42	P15	P42	P15	P42	
9～37	7.6	1.9	2.4	2.5	1.8	9.7	9.5	L、L7、L9、K Types
51-66	8.7	1.9	2.4	2.5	1.8	9.7	9.5	

J30J locking assembly
Locking Assemblies Suitable for Right-Angle PCB Products.

Type V1 Locking Assembly is only suitable for right-angle PCB products where no locking is required between the plug and the socket.。

Assembly Diagram

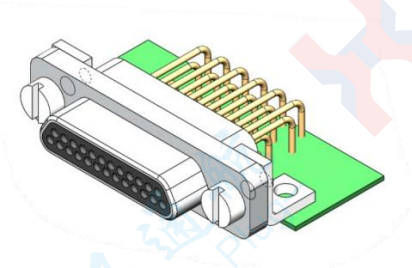

Product Outline Dimension Drawing

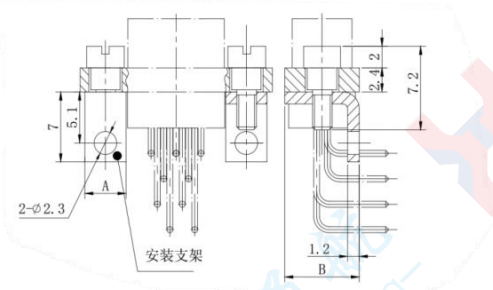

.Installation Schematic Diagram for Type V1 Locking Assembly

Core Counts of Compatible Products	A	A
9 ~ 37	4.2	7.6
51	4.2	8.7

J30J Locking Assemblies / J30J Fixed-End Locking Assemblies / For J30JD Series Products.

The main fixed-end mounting screws for J30JD series products are Type P46, which are only suitable for front-panel mounting

.Type P46 Locking Assembly

Assembly Diagram

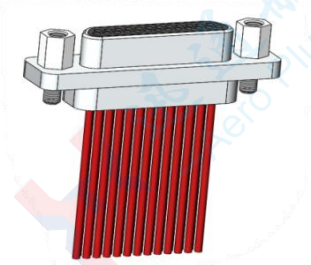

Product Outline Dimension Drawing

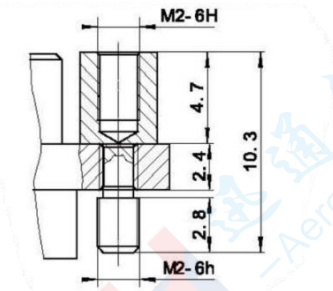

.Applicable Conditions and Matching Components of Type P46 Locking Assembly

J30J Free-End Locking Assembly	Applicable Conditions and Compatible J30J Fixed-End Locking Assemblies
Type P46	Exclusive for J30JD products; Compatible with Locking Assemblies Type L, L7, L9, K.

J30J locking assembly

Locking Assemblies for Through-Hole PCB: Mainly including Type P5, P10, P23, P25, P17, P41 and V Locking Assemblies。

.Type P5, P10, P23, and P25 Locking Assemblies

.Type P5, P10, P23, and P25 are only suitable for front-panel mounting of through-hole PCBs.

Assembly Diagram

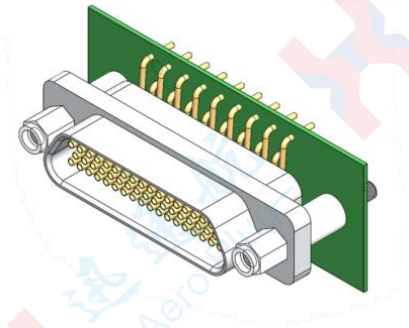

Product Outline Dimension Drawing

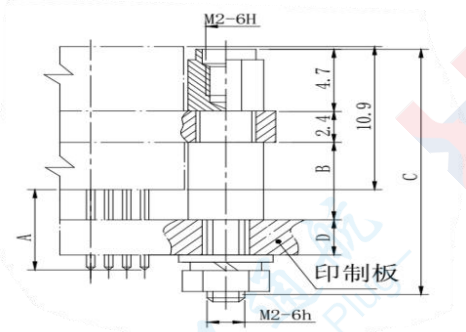

.Matching of Type P5, P10, P23, and P25 Locking Assemblies

J30J Fixed-End Locking Assembly	A	B	C	The applicable thickness range of through-hole PCBs	Adaptable Free-End Assembly
Type P5	5.7	5.9	18.6	1.6～2.5	L、L7、L9、K Types
Type P10	8	8.4	20.5	1.6～2.5	
Type P25	5.7	5.9	20.5	1.6～2.5	
	8	5.9	20.5	1.6～4.8	
Type P23	5.7	5.9	17.8	1.6	

Type P17 Locking Assembly

Assembly Diagram

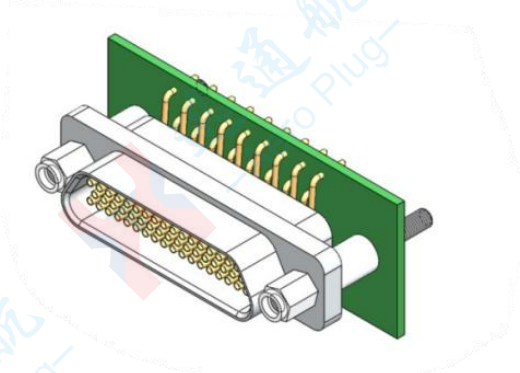

Product Outline Dimension Drawing

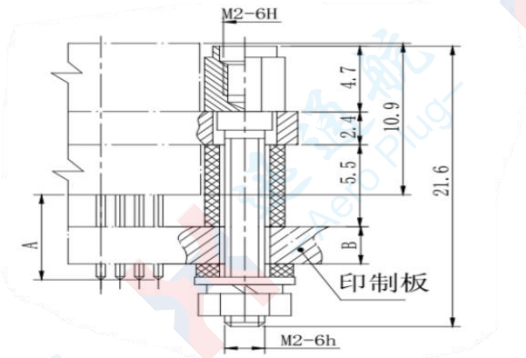

.Matching of Type P17 Locking Assembly

J30J Fixed-End Locking Assembly	A	Applicable PCB Thickness B	Compatible J30J Free-End Locking Assemblies	Applicable Products
Type P17	5.7	1.6 ~ 3	L、L7、L9、K Types	J30J-9～51TJN/ZKN、J30J-9～ 100TJN/ZKN-J
	7.2	1.6 ~ 4.5		J30J-9～51TJN4/ZKN4、J30J-9～100ZKN4-J

Type P32 and P41 Locking Assemblies: Suitable for rear-panel mounting of through-hole PCB products with a PCB thickness of 1.6～2.5mm.

Assembly Diagram

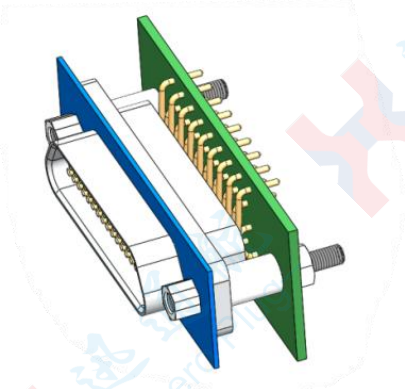

Product Outline Dimension Drawing

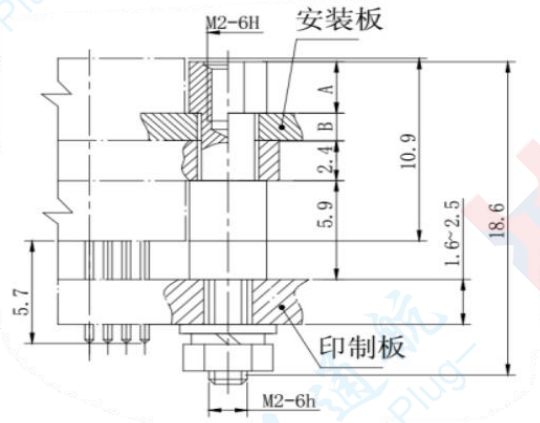

.Compatible with Type P32 and P41 Locking Assemblies

J30J Fixed-End Locking Assemblies	A	B	可Compatible Free-End Locking Assemblies for J30J Series
Type P32	2.7	2	L、L7、L9、K Types
Type P41	3.2	1.5	L、L7、L9、K Types

V-Type Locking Assemblies: Suitable for non-locking through-hole PCB products, with the PCB thickness not exceeding 2.5mm.

Assembly Diagram

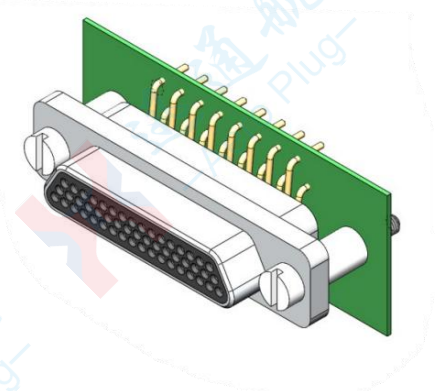

Product Outline Dimension Drawing

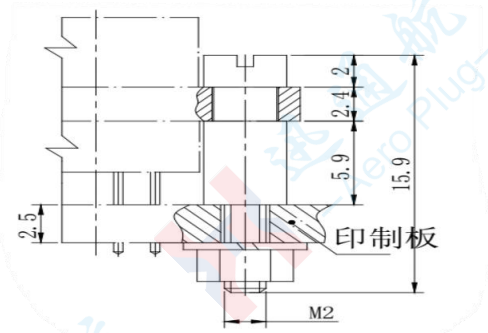

J30J series macro rectangular electrical connectors/Installation opening dimensions

.J30J-TJ/ZK J30J-TJ/ZK-D J30J-TJ/ZK(9.6) J30J-TJ/ZK(11.6)
J30JR-TJ/ZK J30JM-ZK J30JM-ZKS J30JM1-ZKS

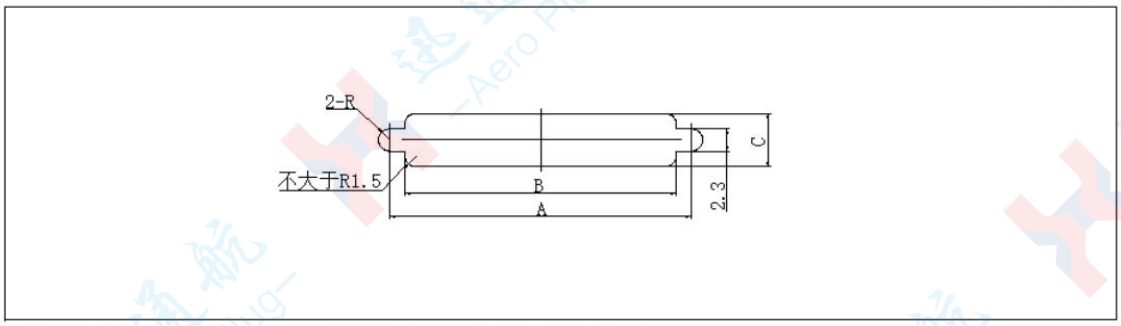

The size of the installation opening in front of the board

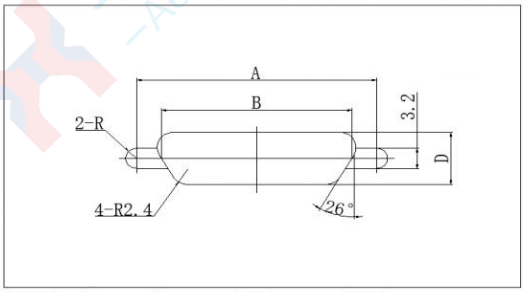

Mounting Hole Dimensions for Rear-Panel Mounting (Excluding 100-Core Models)

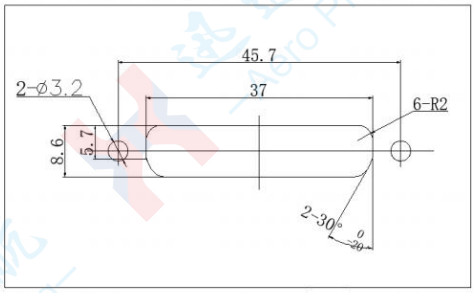

Mounting Hole Dimensions for 100-Core Rear-Panel Mounting

Series Spectrum	A	B	C	D	Series Spectrum	A	B	C	D
9Core	14.3	10.2	7	6.3	37Core	32.2	28.1	7	6.3
15 Core	18.2	14.1	7	6.3	51 Core	30.86	26.9	8.1	7.4
21 Core	22	17.9	7	6.3	66 Core	37.3	33.4	8.1	7.4
25 Core	24.5	20.5	7	6.3	74 Core	33.5	29.4	9.3	8.6
31 Core	28.3	24.3	7	6.3	100 Core	45.7	37	9.3	/

Note: Since J30JM-ZK, J30JM-ZKS, and J30JM1-ZK are all sealed products, although the mounting can be achieved by following the mounting plate hole dimensions shown above, the sealing effect may be lost if the mounting plate is a through-hole plate. Therefore, for front-panel mounting of these products, the mounting plate holes should preferably adopt the form of blind threaded holes.

.J30J-TJ/ZK-Q J30JS-TJ/ZK-Q

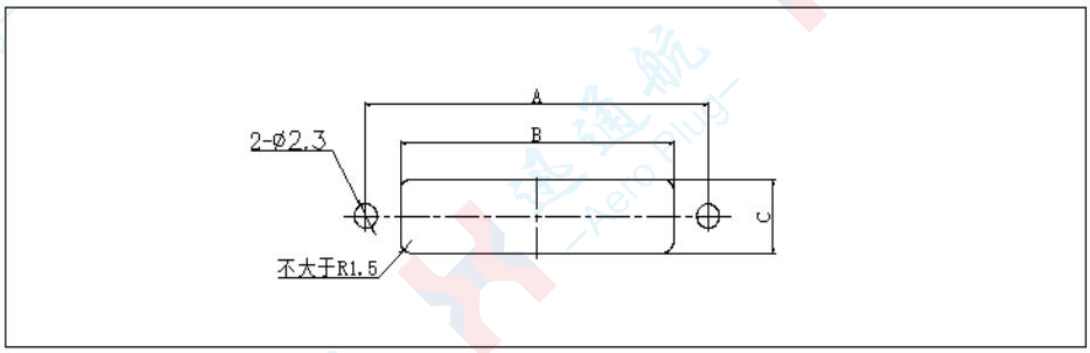

Mounting Hole Dimensions for Front-Panel Mounting

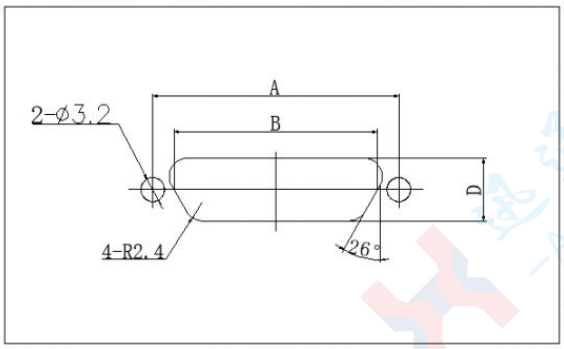

Mounting Hole Dimensions for Rear-Panel Mounting (Excluding the 100-Core Type

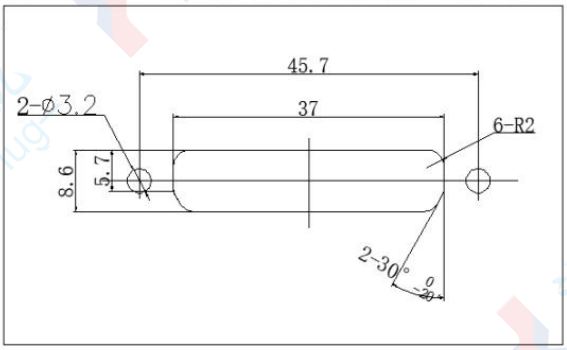

Mounting Hole Dimensions for 100-Core Rear-Panel Mounting

Series Spectrum	A	B	C	D	Series Spectrum	A	B	C	D
9Core	21	10.2	7	6.3	37Core	38.9	28.1	7	6.3
15 Core	24.9	14.1	7	6.3	51 Core	37.6	26.9	8.1	7.4
21 Core	28.7	17.9	7	6.3	66 Core	44	33.4	8.1	7.4
25 Core	31.2	20.5	7	6.3	74 Core	40.2	29.4	9.3	8.6
31 Core	35	24.3	7	6.3	100 Core	52.4	37	9.3	/

.J30J-TJ/ZK-Q8

Mounting Hole Dimensions

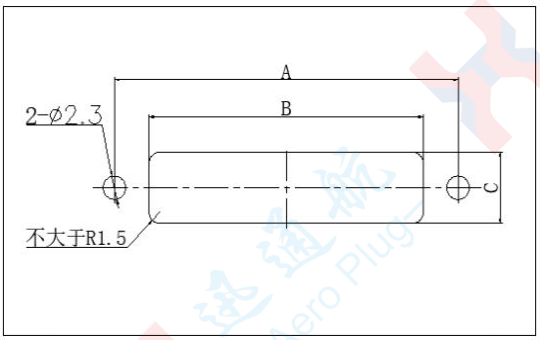

Mounting Hole Dimensions for Front-Panel Mounting

Mounting Hole Dimensions

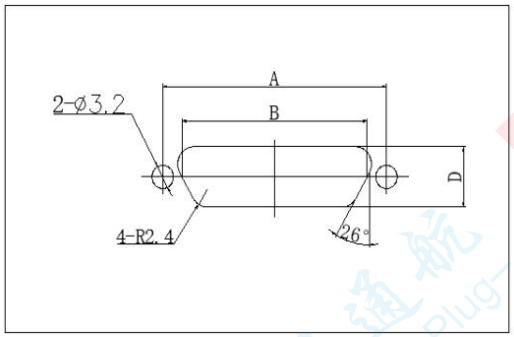

Mounting Hole Dimensions for Rear-Panel Mounting

Series Spectrum	A	B	C	D	Series Spectrum	A	B	C	D
9Core	16.1	12	7	6.3	37Core	34	29.9	7	6.3
15 Core	20	15.9	7	6.3	51 Core	32.6	28.7	8.1	7.4
21 Core	23.8	19.7	7	6.3	66 Core	39.1	35.2	8.1	7.4
25 Core	26.3	22.3	7	6.3	74 Core	35.3	31.2	9.3	8.6
31 Core	30.1	26.1	7	6.3	100 Core	47.5	38.8	9.3	/

J30J-TJ/ZK -A J30J-TJ/ZK-AD J30J-TJ/ZK-A(9.6) J30J-TJ/ZK-AD(11.6)

Mounting Hole Dimensions

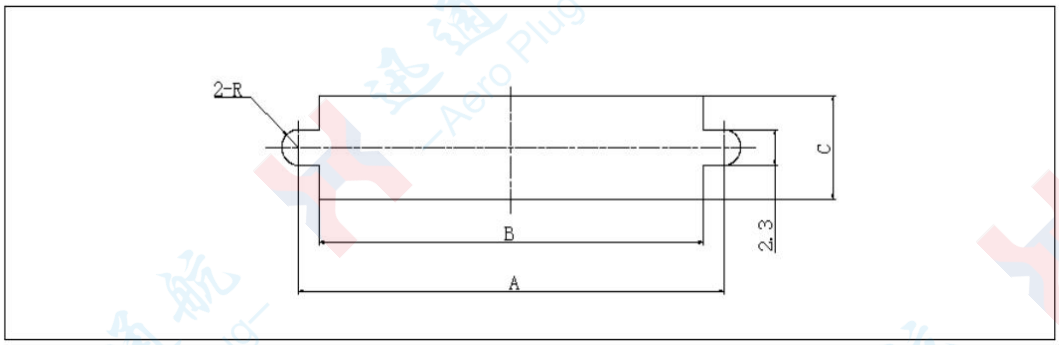

Mounting Hole Dimensions for Front-Panel Mounting

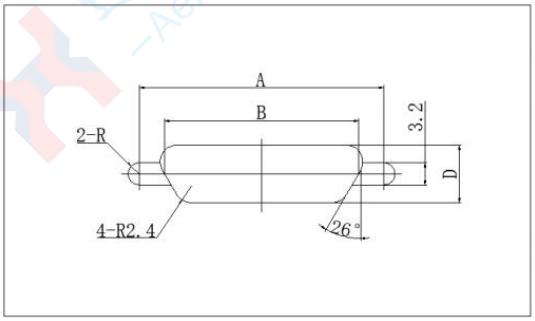

Mounting Hole Dimensions for Rear-Panel Mounting (Excluding 100-Core Models)

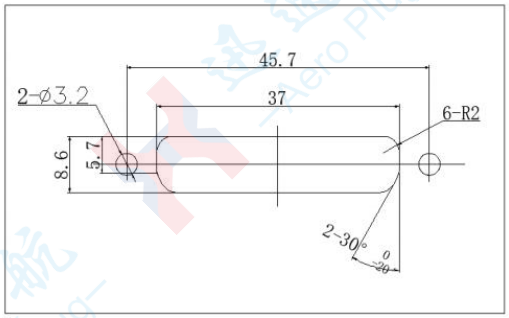

Mounting Hole Dimensions for 100-Core Rear-Panel Mounting

Series Spectrum	A	B	C	D	Series Spectrum	A	B	C	D
9Core	14.3	10.2	8.2	6.3	37Core	32.2	28.1	8.2	6.3
15 Core	18.2	14.1	8.2	6.3	51 Core	30.86	26.9	9.2	7.4
21 Core	22	17.9	8.2	6.3	66 Core	37.3	33.4	9.2	7.4
25 Core	24.5	20.5	8.2	6.3	74 Core	33.5	29.4	11.2	8.6
31 Core	28.3	24.3	8.2	6.3	100 Core	45.7	37	11.2	/

J30J-TJ/ZK-Q8

Mounting Hole Dimensions

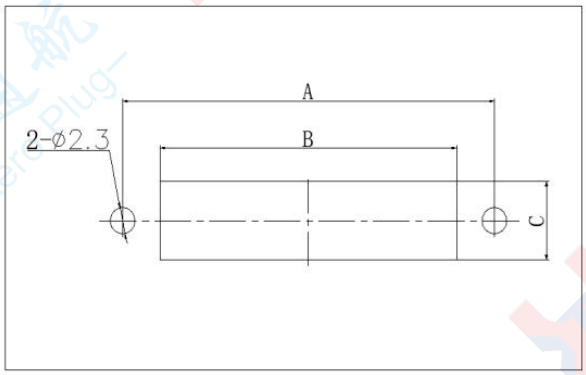

Mounting Hole Dimensions for Front-Panel Mounting

Mounting Hole Dimensions

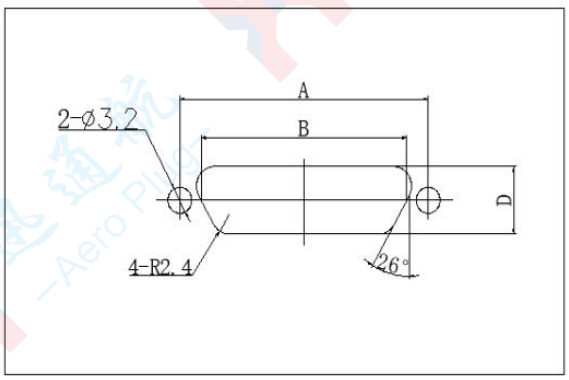

Mounting Hole Dimensions for Rear-Panel Mounting

Series Spectrum	A	B	C	D	Series Spectrum	A	B	C	D
9Core	16.1	10.2	8.2	6.3	37Core	34	28.1	8.2	6.3
15 Core	20	14.1	8.2	6.3	51 Core	32.6	26.9	9.2	7.4
21 Core	23.8	17.9	8.2	6.3	66 Core	39.1	33.4	9.2	7.4
25 Core	26.3	20.5	8.2	6.3	74 Core	35.3	29.4	11.2	8.6
31 Core	30.1	24.3	8.2	6.3	100 Core	47.5	37	11.2	/

.J30JA- ZK

Mounting Hole Dimensions for Front-Panel Mounting

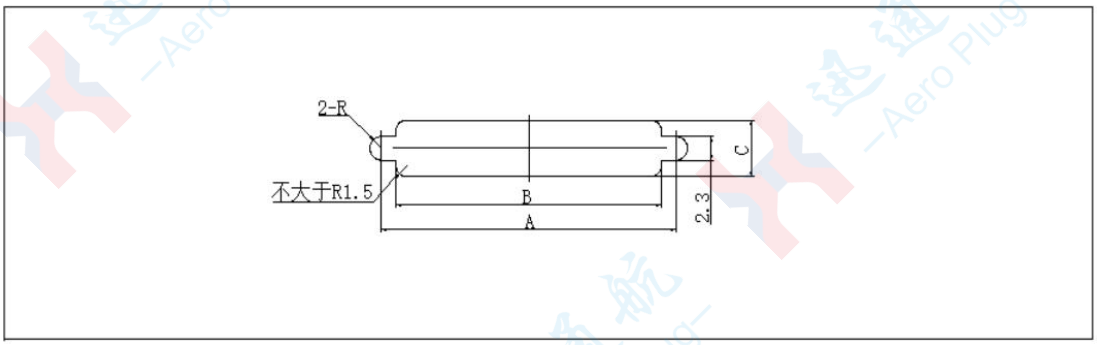

Series Spectrum	A	B	C	Series Spectrum	A	B	C
9Core	18.6	10.2	7	51 Core	35.3	26.9	8.1
15 Core	22.6	14.1	7	66 Core	41.7	33.5	8.1
21 Core	26.3	17.9	7	74 Core	37.8	29.4	9.3
25 Core	28.9	20.5	7	100 Core	45.3	37	9.3
31 Core	32.7	24.3	7	144 Core	59.3	51	9.3
37Core	36.6	28.1	7				

.J30J- TJ/ZK-C

Mounting Hole Dimensions

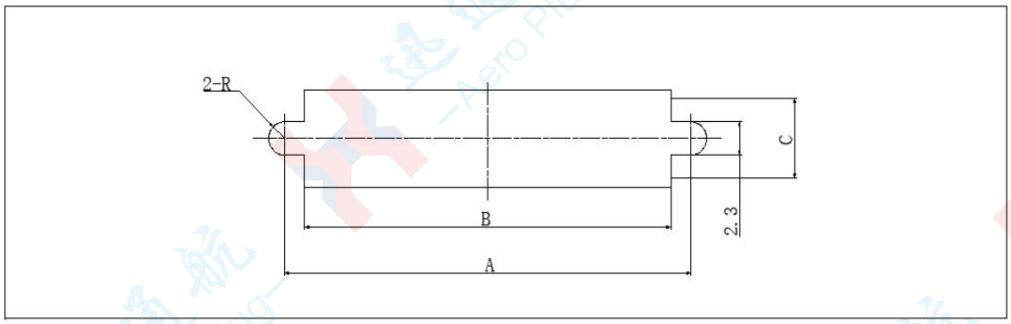

Mounting Hole Dimensions for Front-Panel Mounting

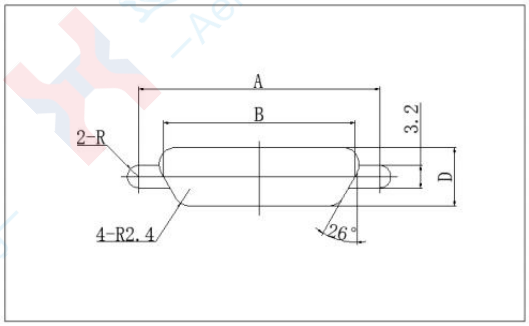

Mounting Hole Dimensions for Rear-Panel Mounting (Excluding the 100-Core Typ

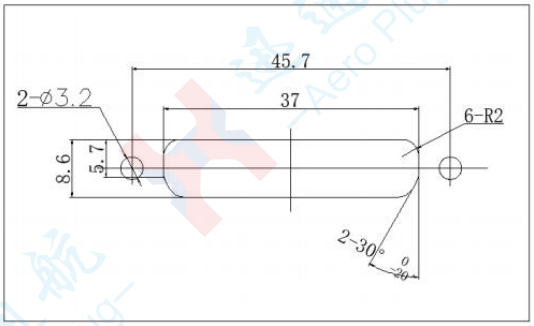

Mounting Hole Dimensions for Rear-Panel Mounting of the 100-Core Type

Series Spectrum	A	B	C	D	Series Spectrum	A	B	C	D
9Core	14.3	10.2	8.2	6.3	37Core	32.2	28.1	8.2	6.3
15 Core	18.2	14.1	8.2	6.3	51 Core	30.86	26.9	9.3	7.4
21 Core	22	17.9	8.2	6.3	66 Core	37.3	33.4	9.3	7.4
25 Core	24.5	20.5	8.2	6.3	74 Core	33.5	29.4	10.3	8.6
31 Core	28.3	24.3	8.2	6.3	100 Core	45.7	37	10.3	/

J30J Series Micro Rectangular Electrical Connector\PCB Mounting Hole Dimensions .J30J Straight Plug PCB Mount Types N, N3, N4, and N8

PCB Mounting Hole Dimensions

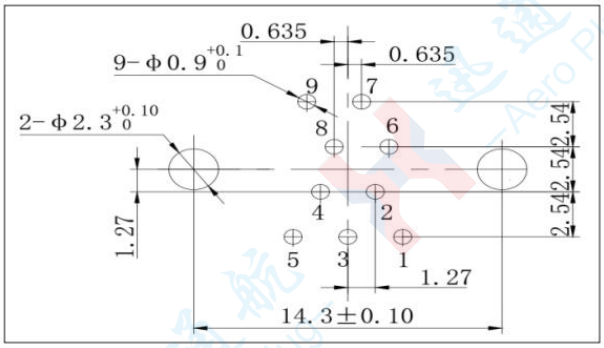

J30J-9TJN、TJN4、TJN8

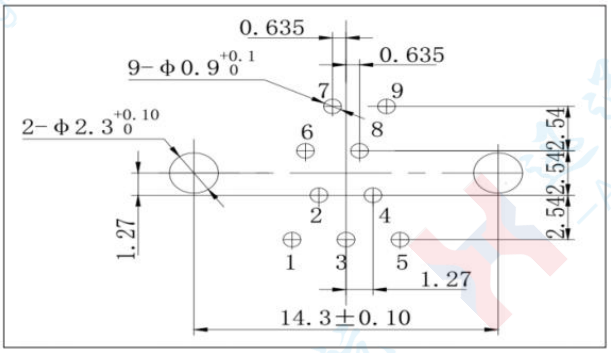

J30J-9ZKN、ZKN3、ZKN4

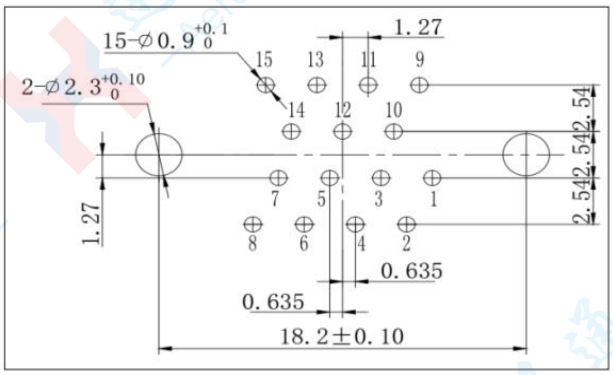

J30J-15TJN、TJN4、TJN8

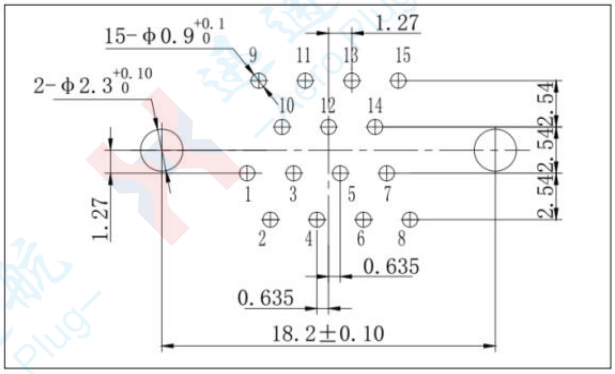

J30J-15ZKN、ZKN3、ZKN4

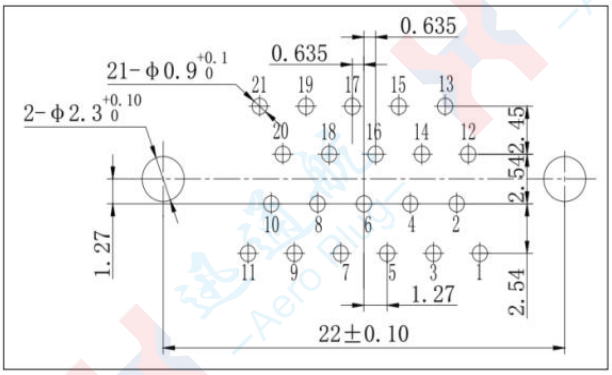

J30J-21TJN、TJN4、TJN8

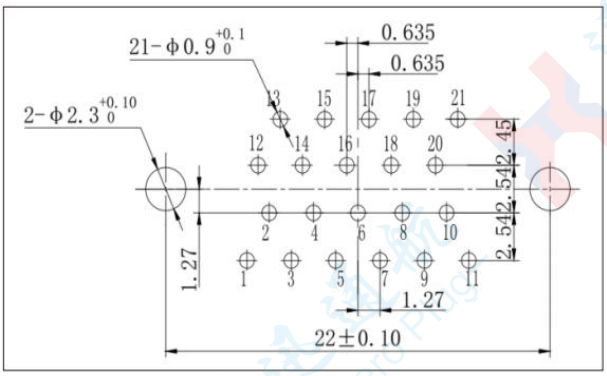

J30J-21ZKN、ZKN3、ZKN4

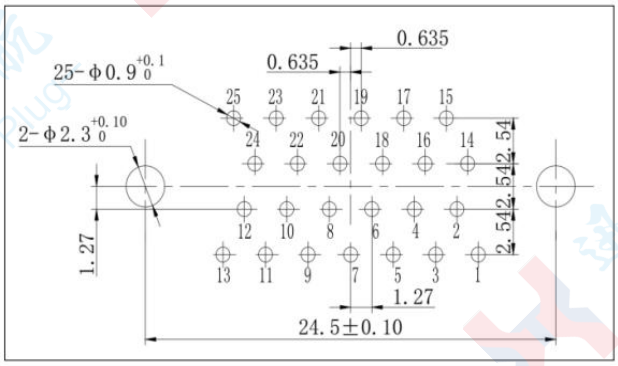

J30J-25TJN、TJN4、TJN8

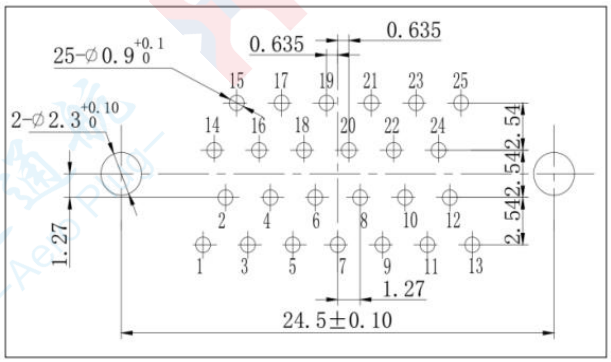

J30J-25ZKN、ZKN3、ZKN4

Dimension Drawing of PCB Mounting Holes

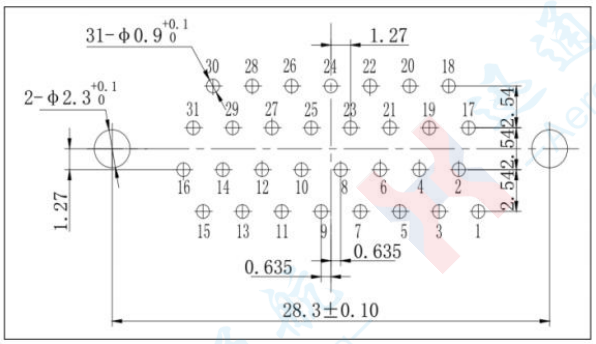

J30J-31TJN、TJN4、TJN8

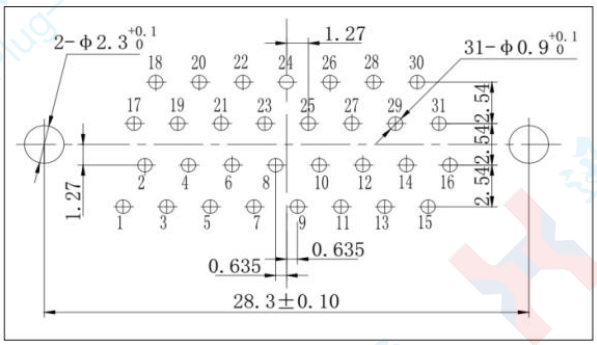

J30J-31ZKN、ZKN3、ZKN4

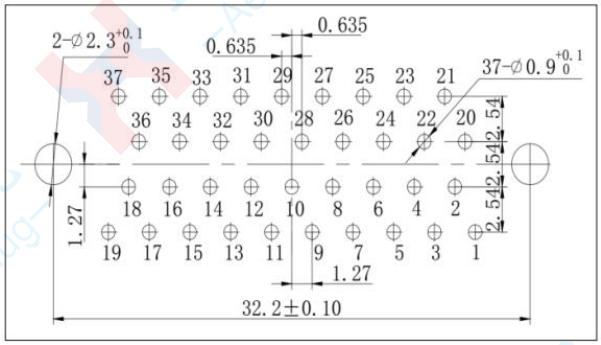

J30J-37TJN、TJN4、TJN8

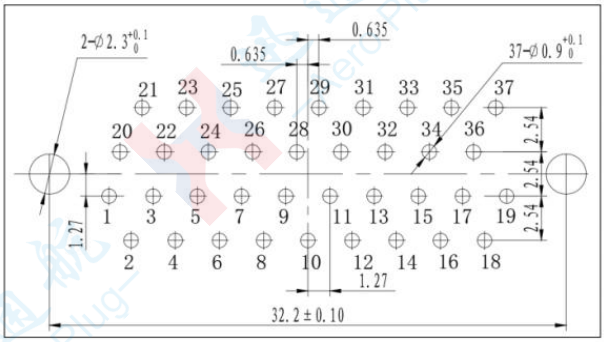

J30J-37ZKN、ZKN3、ZKN4

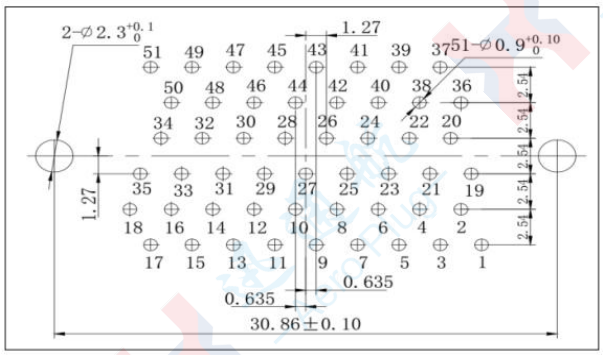

J30J-51TJN、TJN4 、TJN8

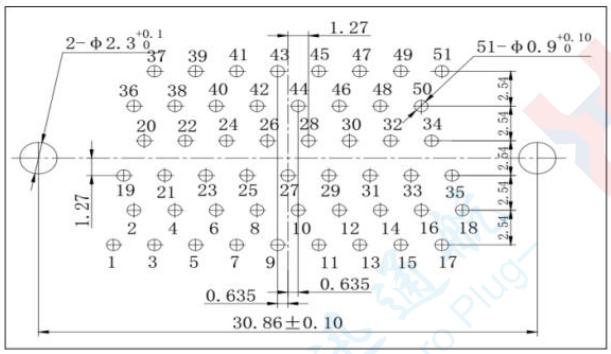

J30J-51ZKN、ZKN3、ZKN4

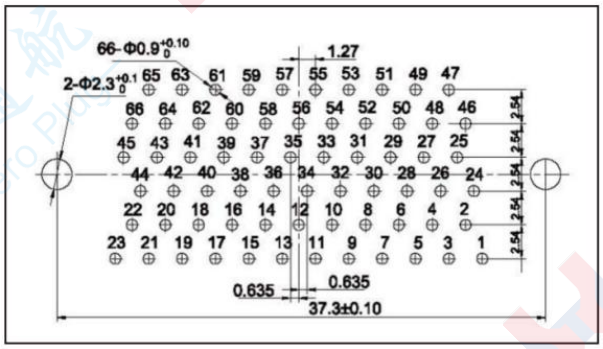

J30J-66TJN、TJN4 、TJN8

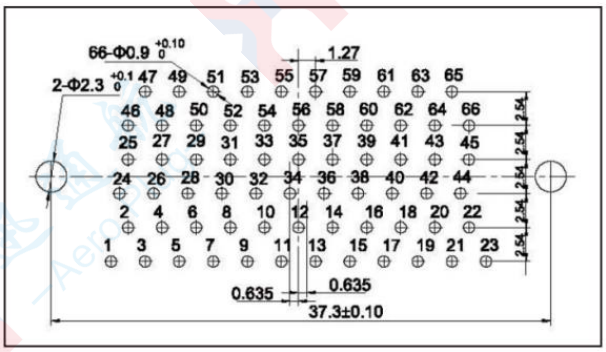

J30J-66ZKN、ZKN3、ZKN4

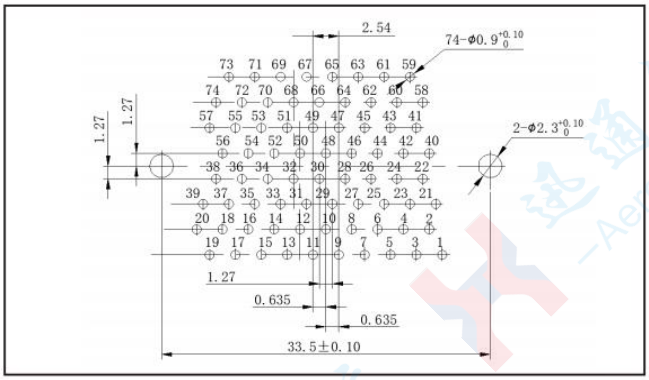

J30J-74TJN、TJN4 、TJN8

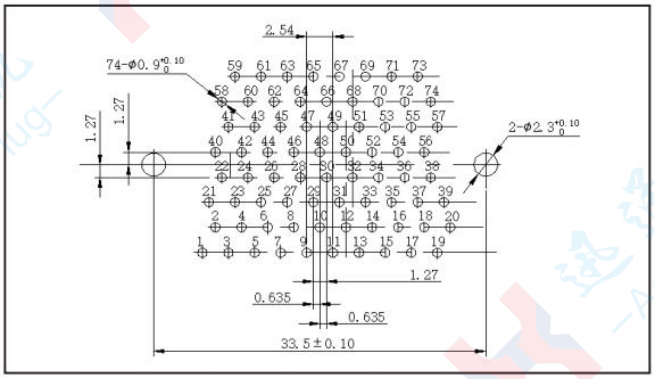

J30J-74ZKN、ZKN3、ZKN4

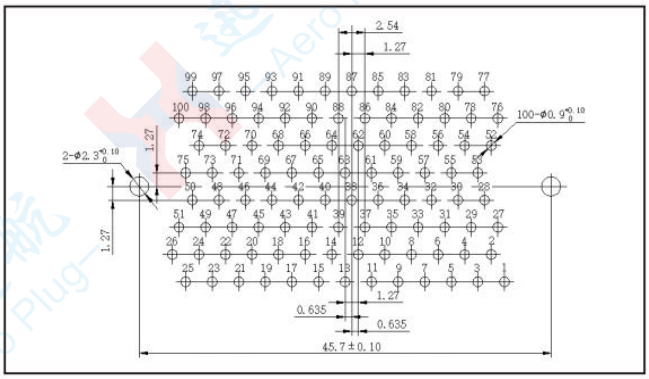

J30J-100TJN、TJN4 、TJN8

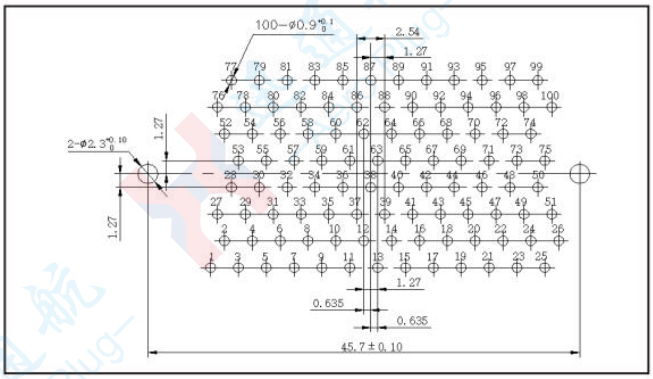

J30J-100ZKN、ZKN3、ZKN4

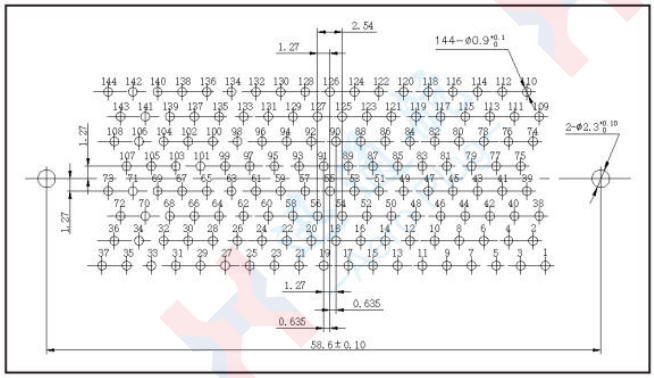

J30J-144TJN、TJN4 、TJN8

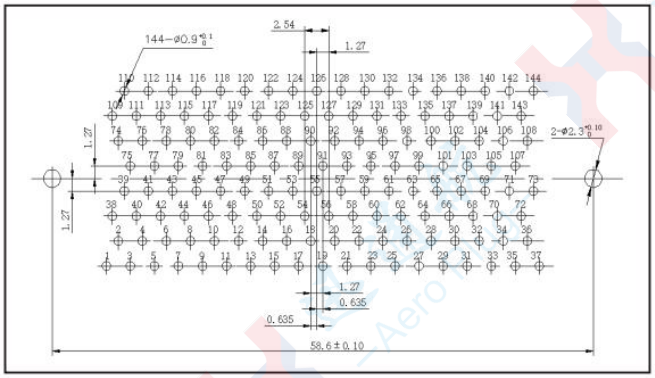

J30J-144ZKN、ZKN3、ZKN4

J30J Series Micro Rectangular Electrical Connector \PCB Mounting Hole Dimensions .J30J Through-Hole PCB Type N-J

PCB Mounting Hole Dimension Drawing

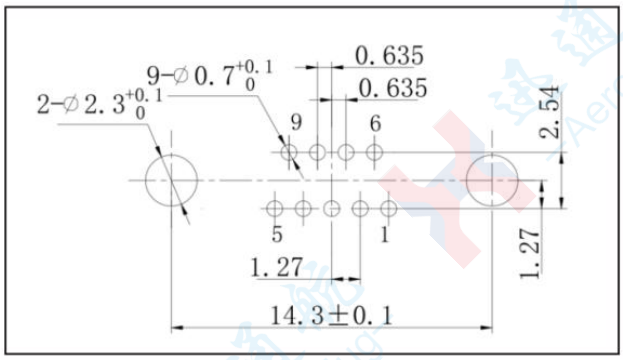

J30J-9TJN-J

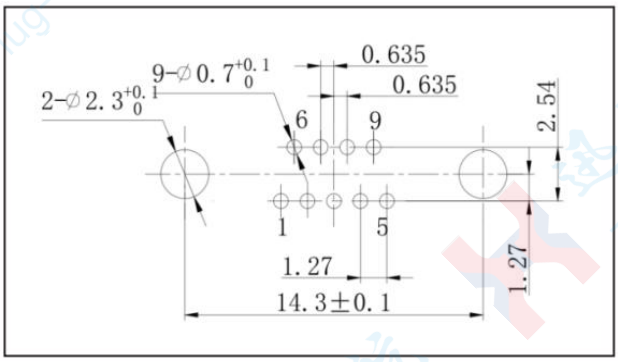

J30J-9ZKN-J、ZKN4-

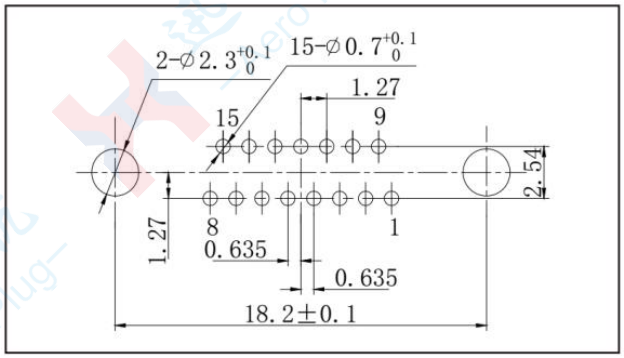

J30J-15TJN-J

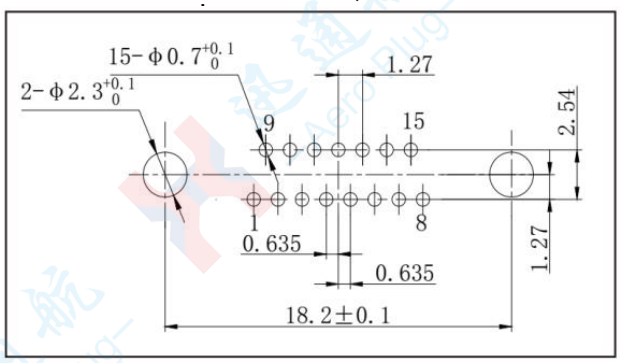

J30J-15ZKN-J、ZKN4-J

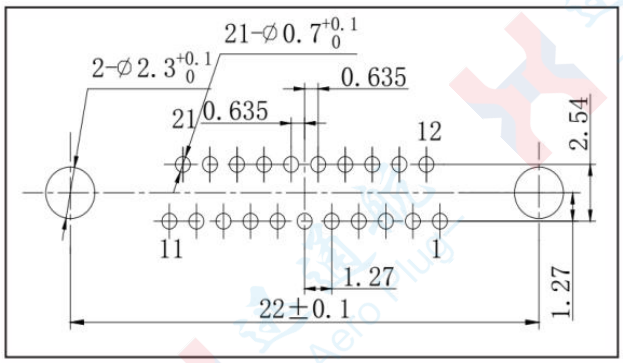

J30J-21TJN-J

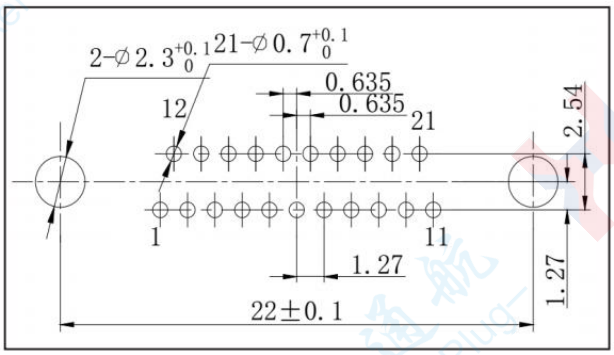

J30J-21ZKN-J、ZKN4-J

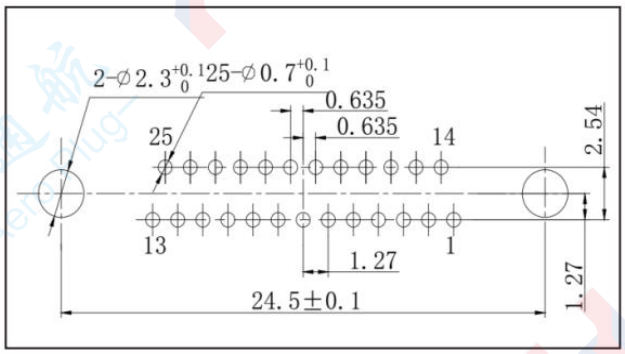

J30J-25TJN-J

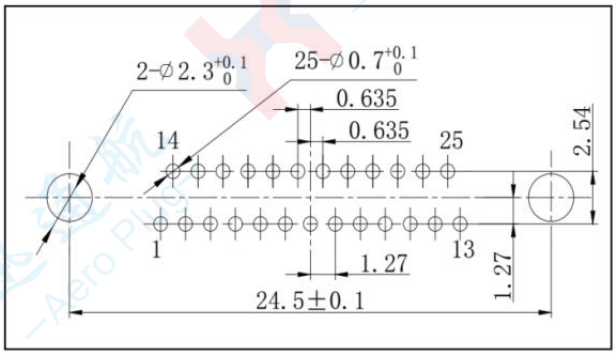

J30J-25ZKN-J、ZKN4-J

PCB Mounting Hole Dimension Drawing

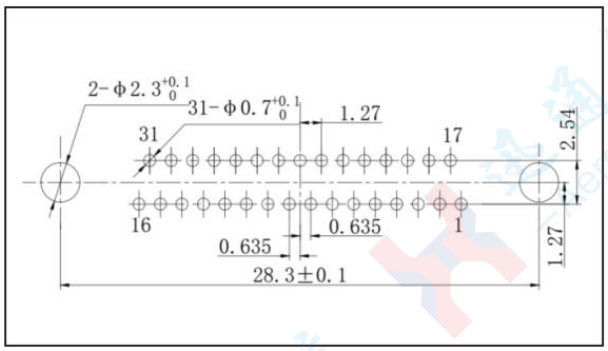

J30J-31TJN-J

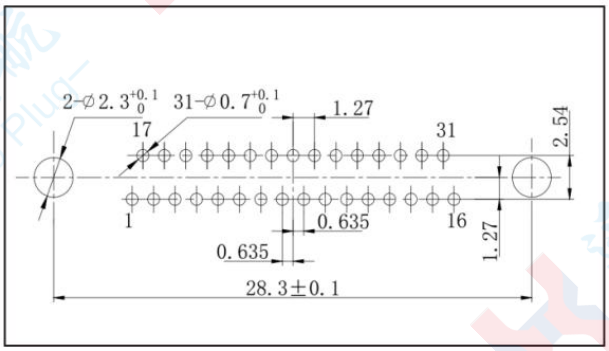

J30J-31ZKN-J、ZKN4-J

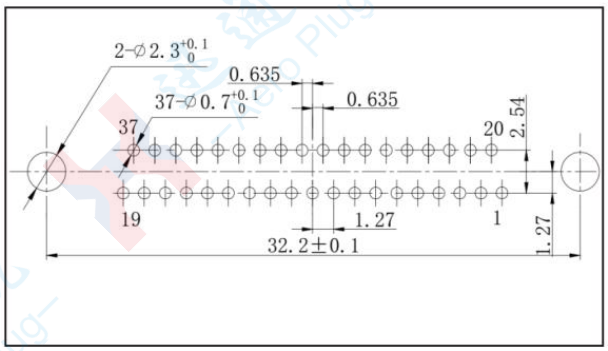

J30J-37TJN-J

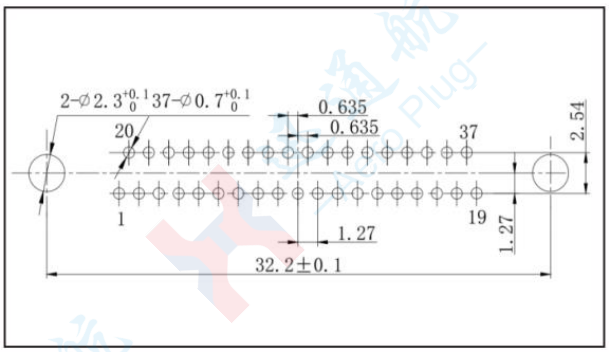

J30J-37ZKN-J、ZKN4-J

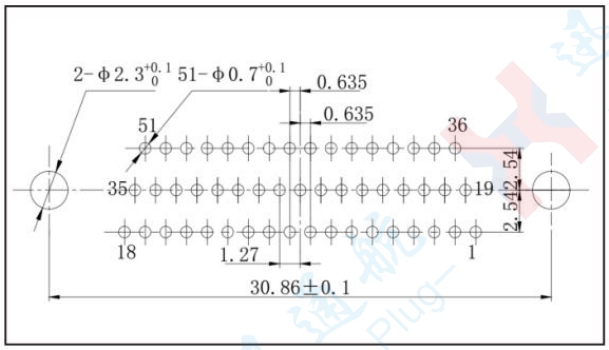

J30J-51TJN-J

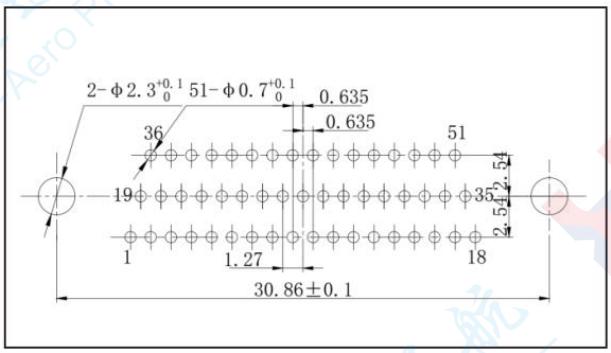

J30J-51ZKN-J、ZKN4-J

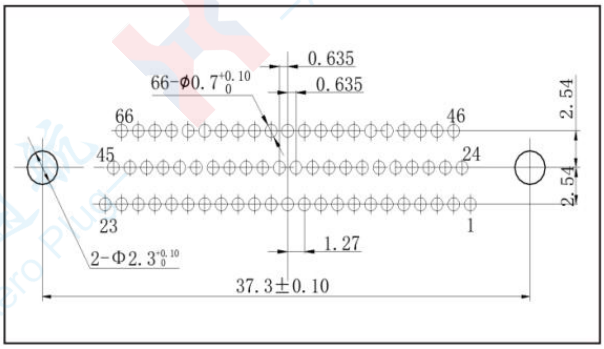

J30J-66TJN-J

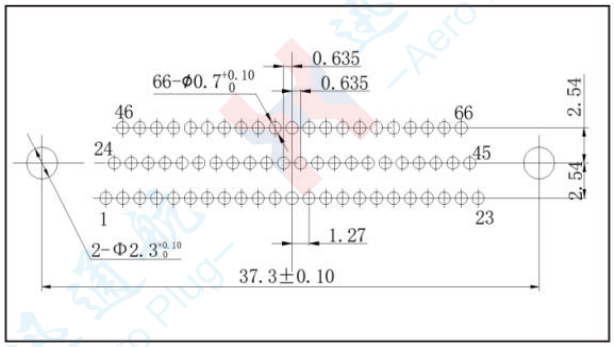

J30J-66ZKN-J、ZKN4-J

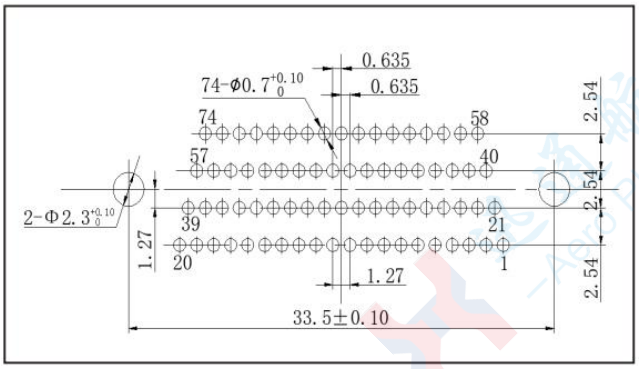

J30J-74TJN-J

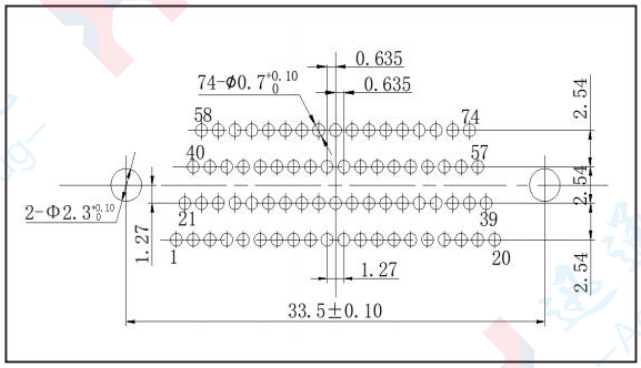

J30J-74ZKN-J、ZKN4-J

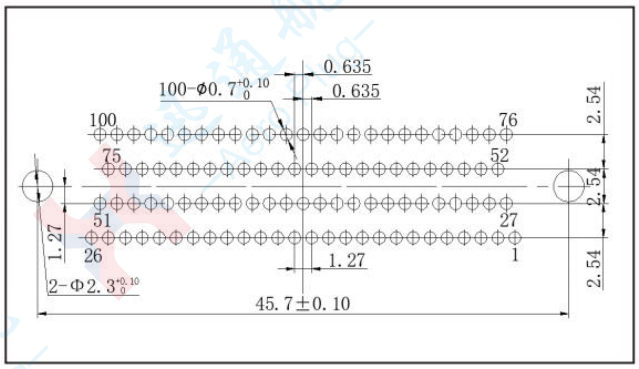

J30J-100TJN-J

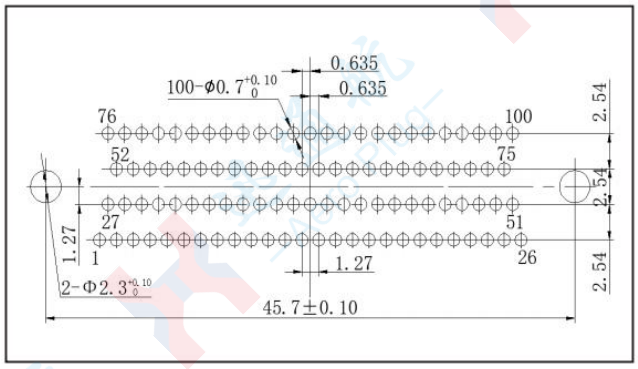

J30J-100ZKN-J、ZKN4-J

J30J Series Micro Rectangular Electrical Connector/PCB Mounting Hole Dimensions .J30J Right-Angle PCB Type W PCB Mounting Hole Dimension Drawing

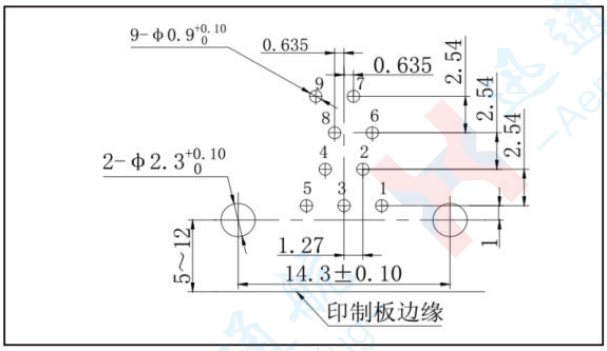

J30J-9TJW

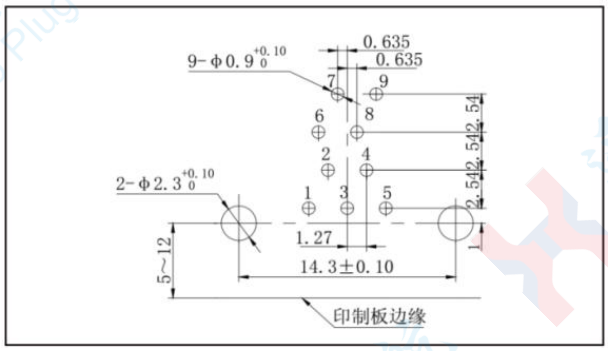

J30J-9ZKW

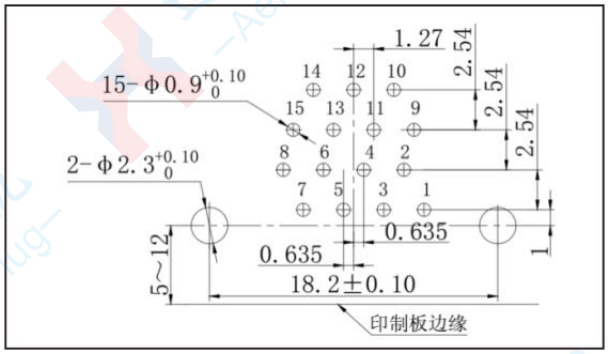

J30J- 15TJW

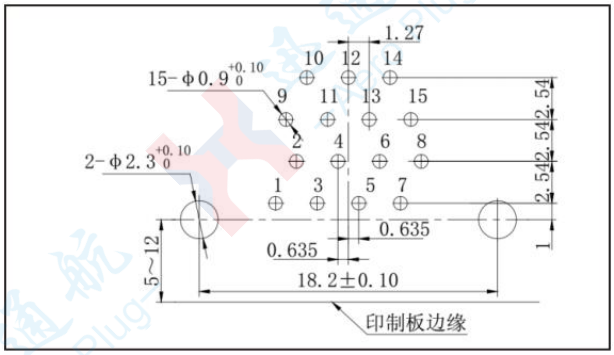

J30J-15ZKW

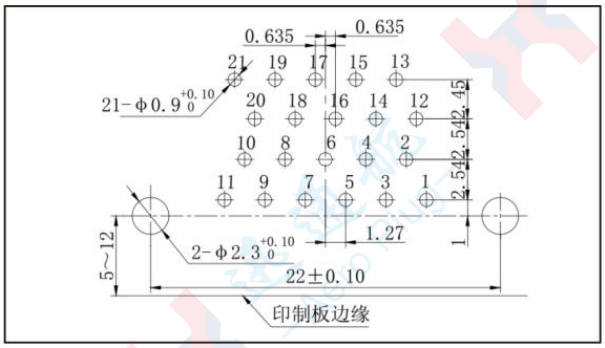

J30J-21TJW

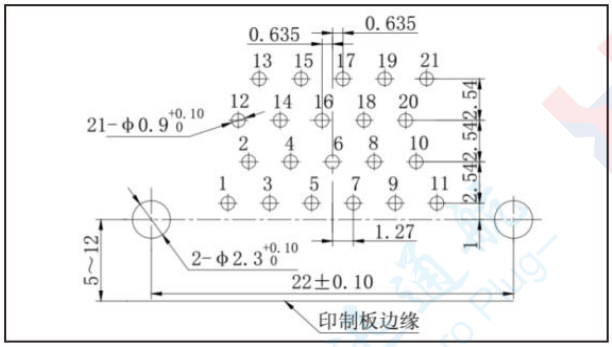

J30J-21ZKW

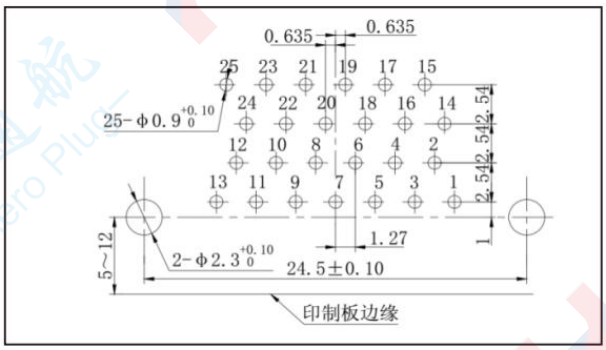

J30J-25TJW

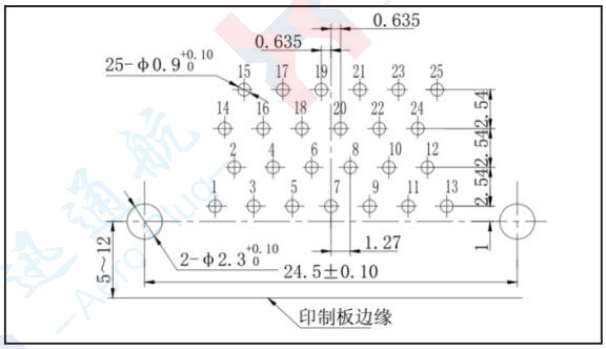

J30J-25ZKW

PCB Mounting Hole Dimension Drawing

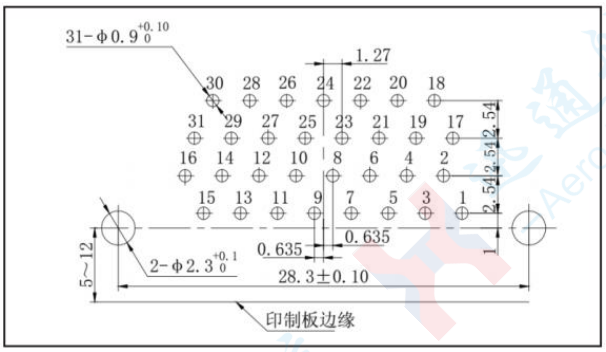

J30J-31TJW

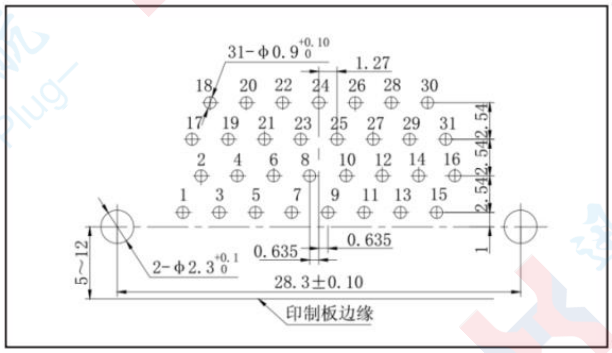

J30J-31ZKW

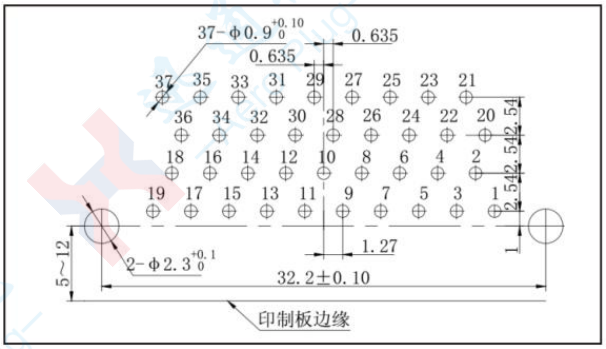

J30J-37TJW

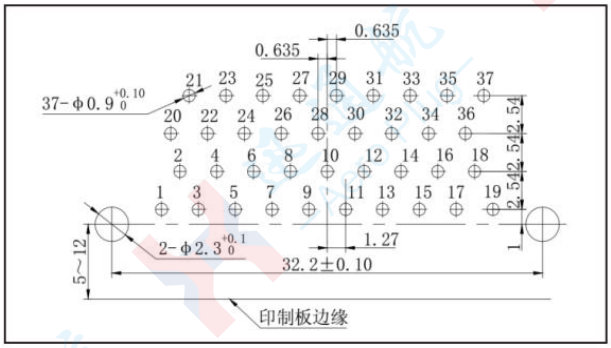

J30J-37ZKW

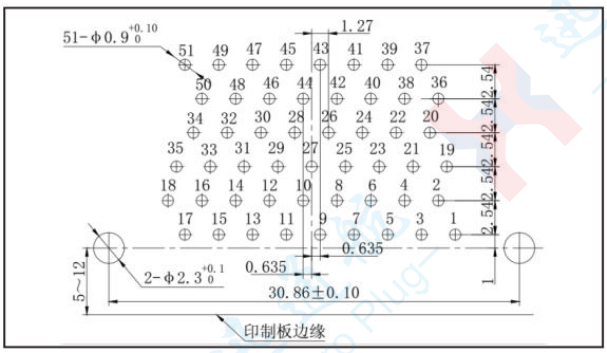

J30J-51TJW

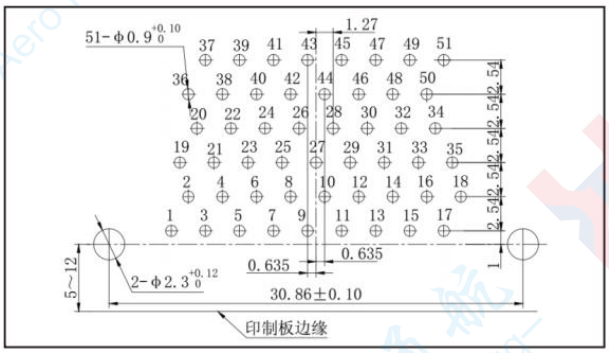

J30J-51ZKW

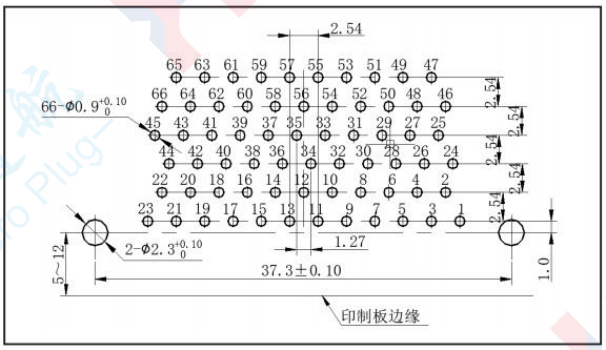

J30J-66TJW

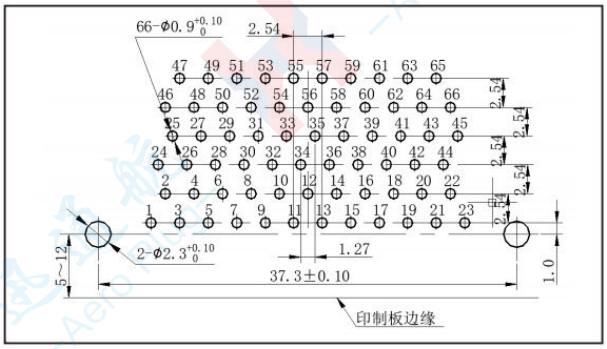

J30J-66ZKW

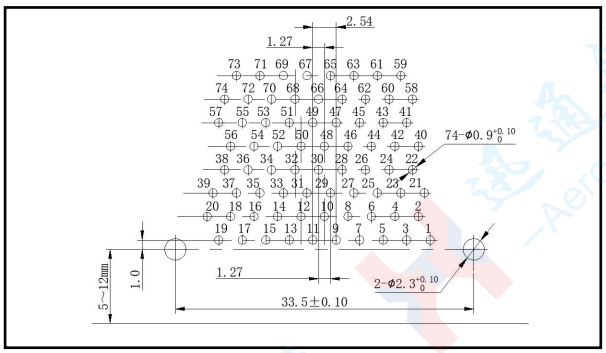

J30J-74TJW

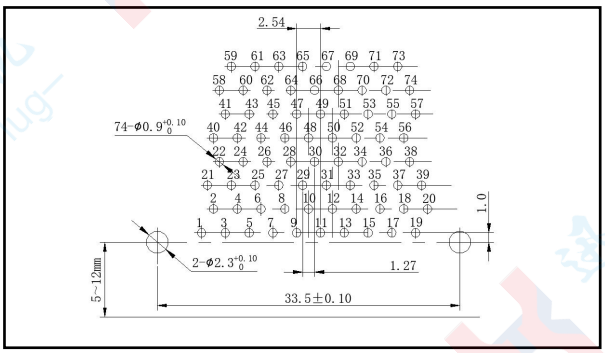

J30J-74ZKW

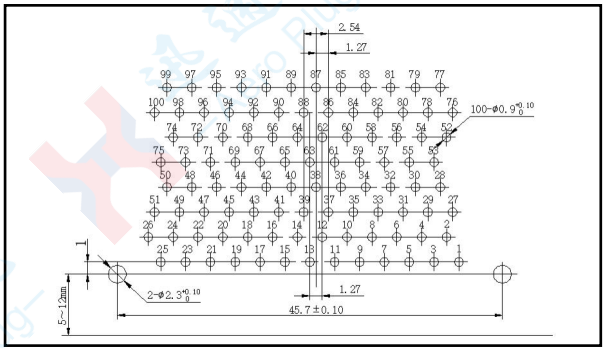

J30J-100TJW

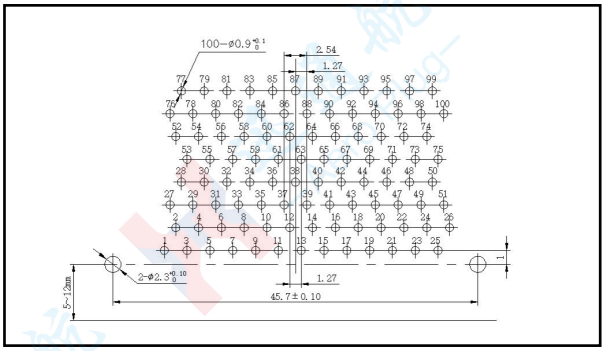

J30J-100ZKW

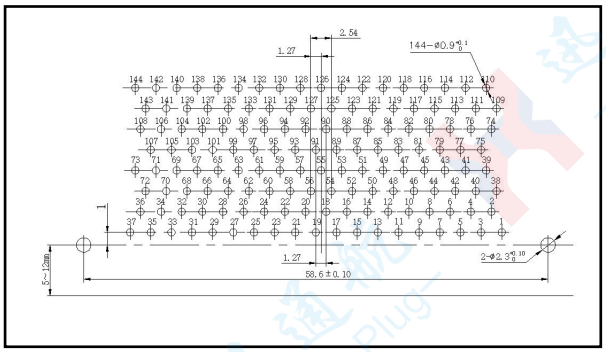

J30J-100TJW

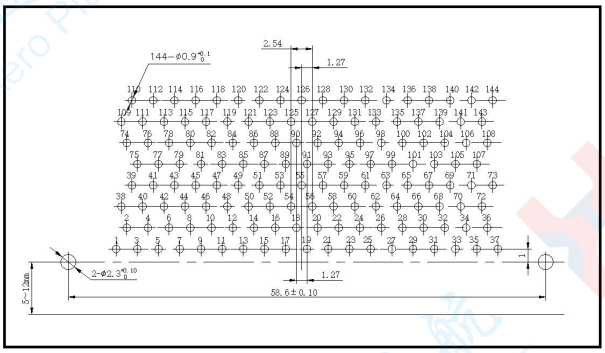

J30J-100ZKW

J30J Series Micro Rectangular Electrical Connector/PCB Mounting Hole Dimensions

.J30J Series Right-Angle Mounted PCB Type W-J

PCB Mounting Hole Dimension Drawing

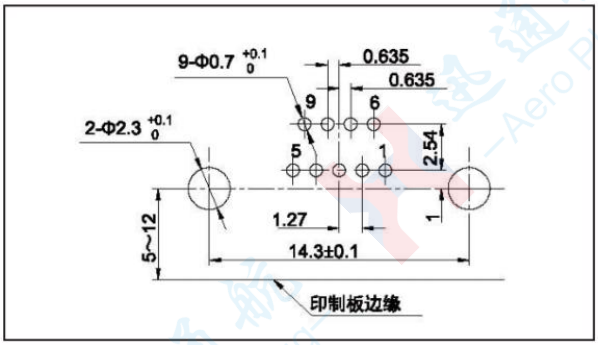

J30J-9TJW-J

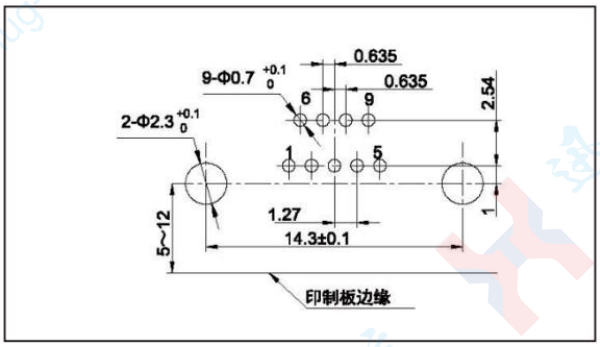

J30J-9ZKW-J

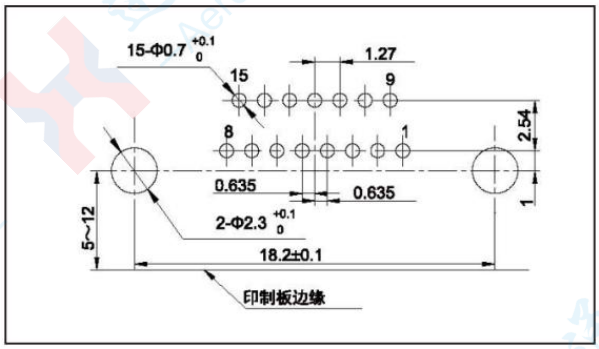

J30J-15TJW -J

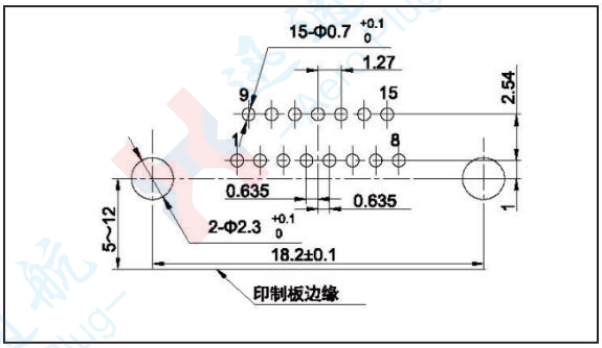

J30J-15ZKW-J

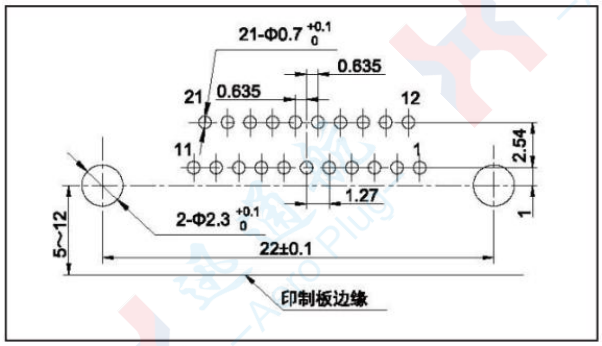

J30J-21TJW-J

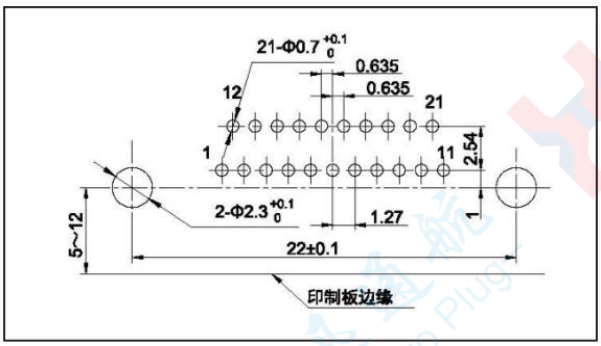

J30J-21ZKW-J

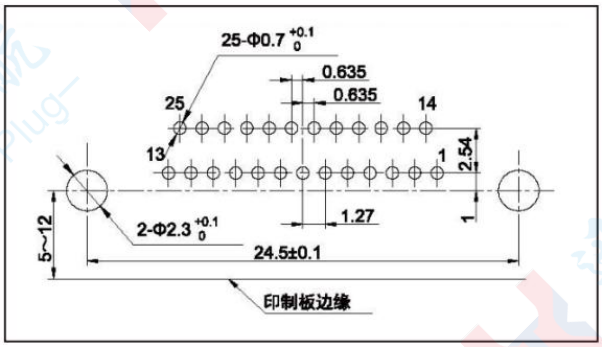

J30J-25TJW-J

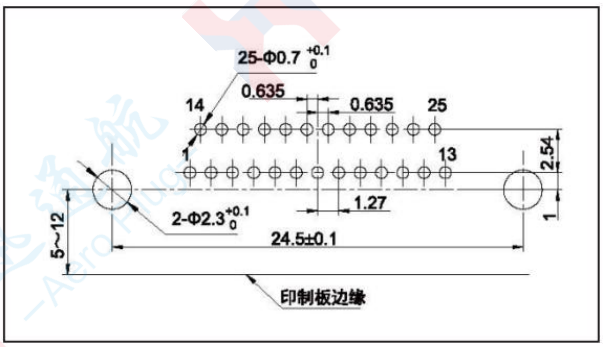

J30J-25ZKW-J

PCB Mounting Hole Dimension Drawing

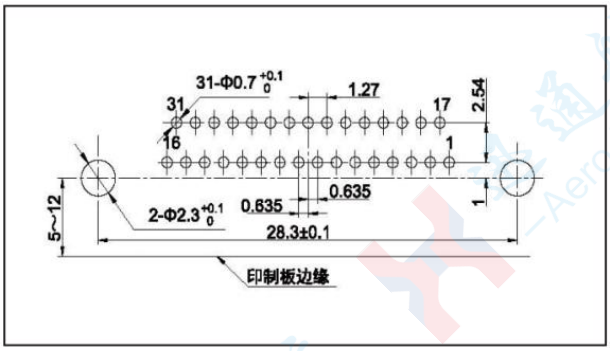

J30J-31TJW-J

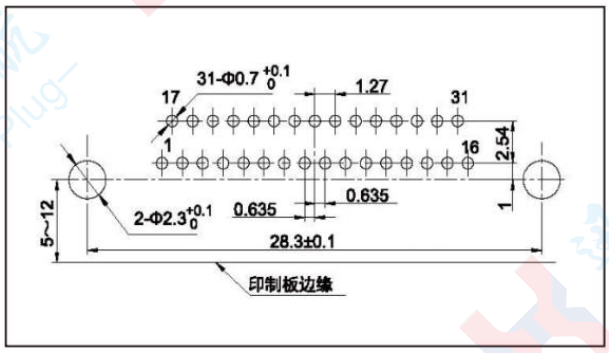

J30J-31ZKW-J

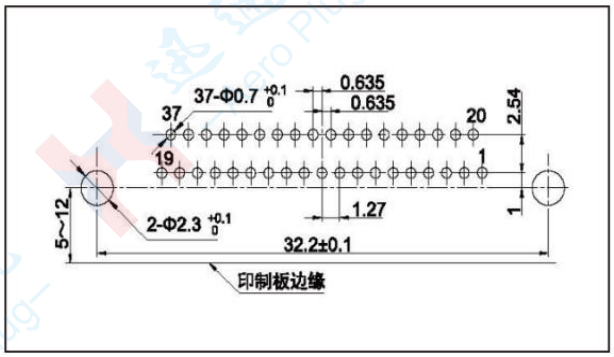

J30J-37TJW-J

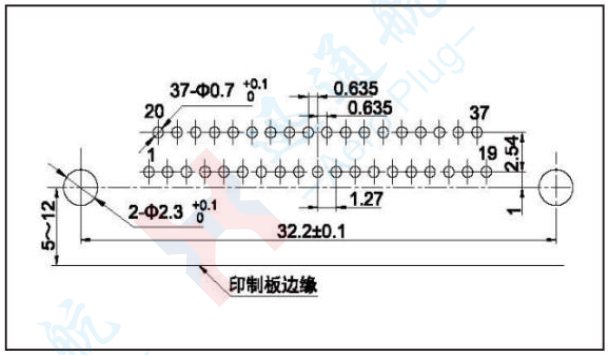

J30J-37ZKW-J

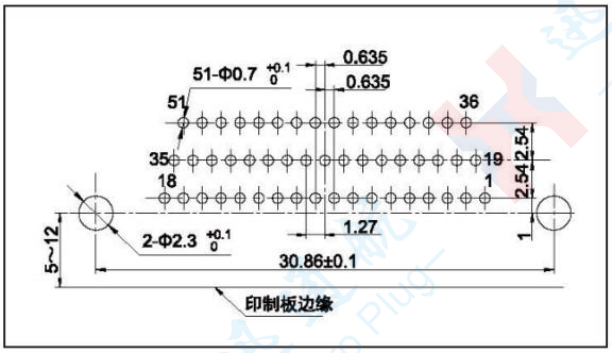

J30J-51TJW-J

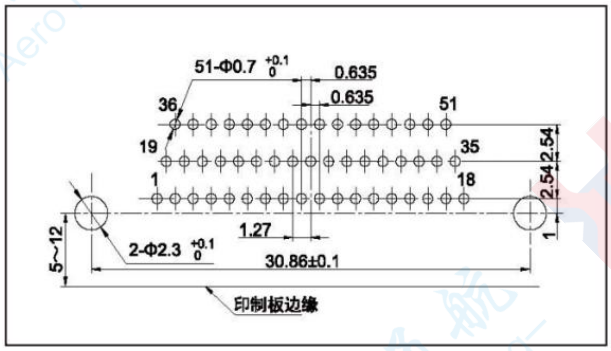

J30J-51ZKW-J

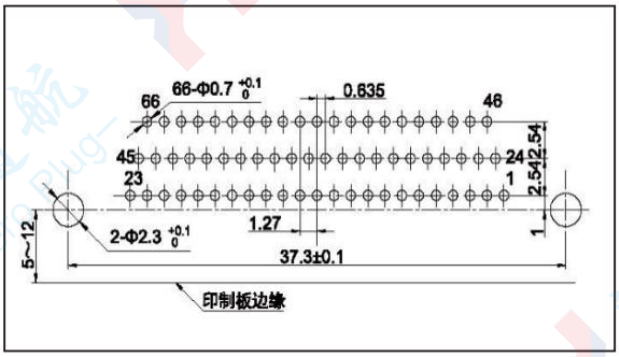

J30J-66TJW-J

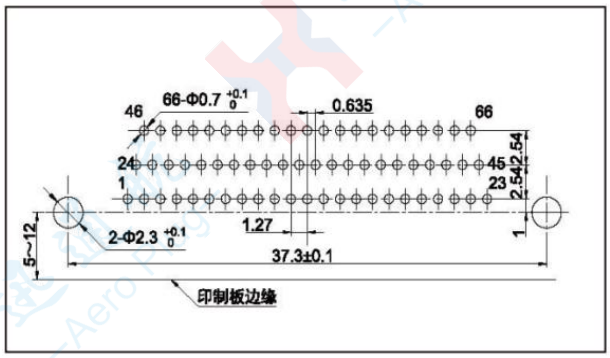

J30J-66ZKW-J

PCB Mounting Hole Dimension Drawing

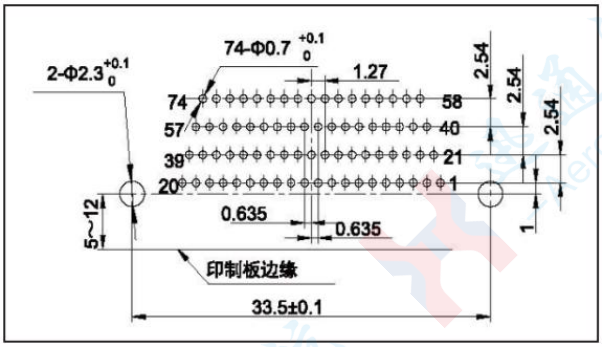

J30J-74TJW-J

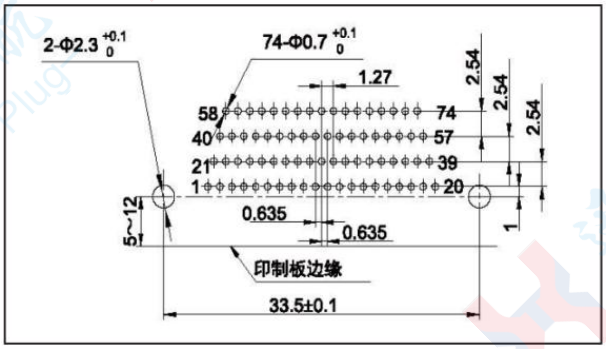

J30J-74ZKW-J

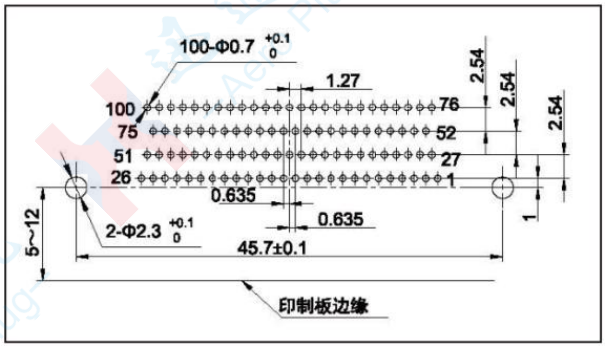

J30J-100TJW-J

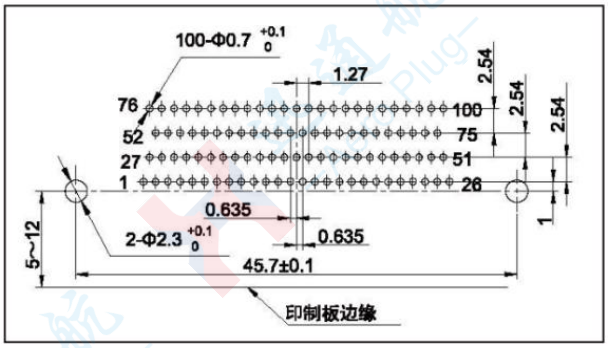

J30J-100ZKW-J

J30J Series Micro Rectangular Electrical Connector/PCB Mounting Hole Dimensions

.J30JA Right-Angle Mounted PCB Type W

PCB Mounting Hole Dimension Drawing

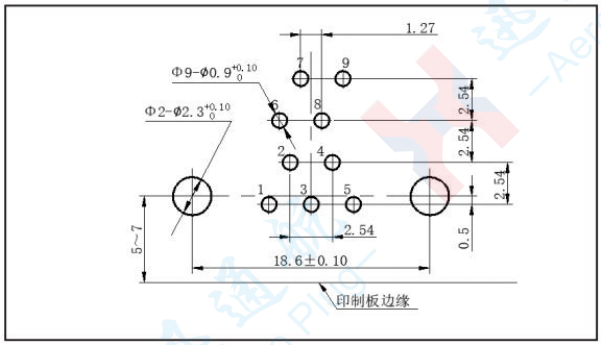

J30JA-9ZKW

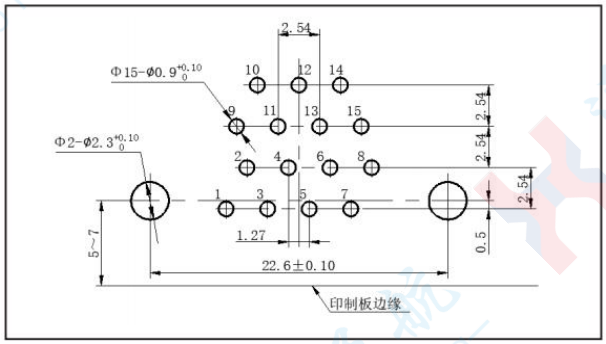

J30JA- 15ZKW

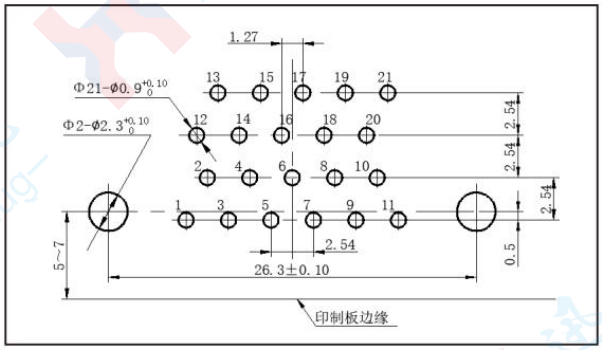

J30JA-21ZKW

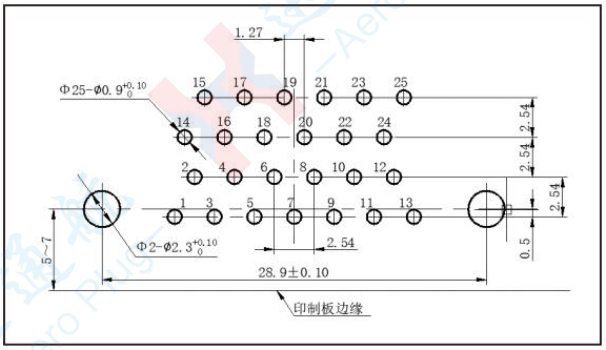

J30JA-25ZKW

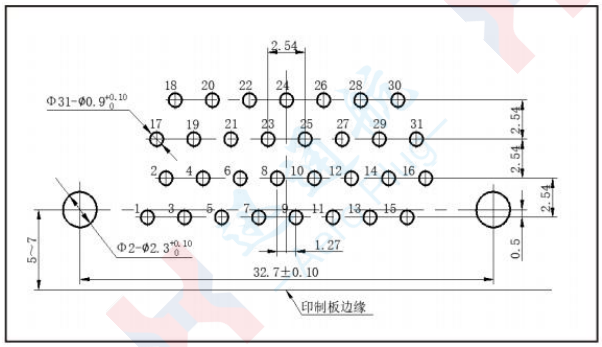

J30JA-31ZKW

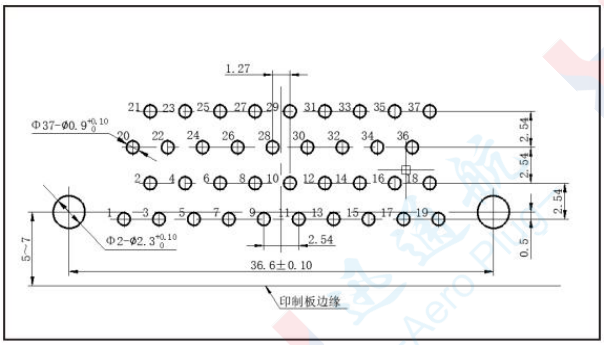

J30JA-37ZKW

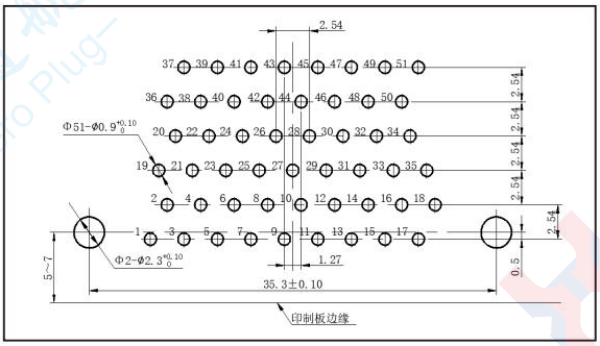

J30JA-51ZKW

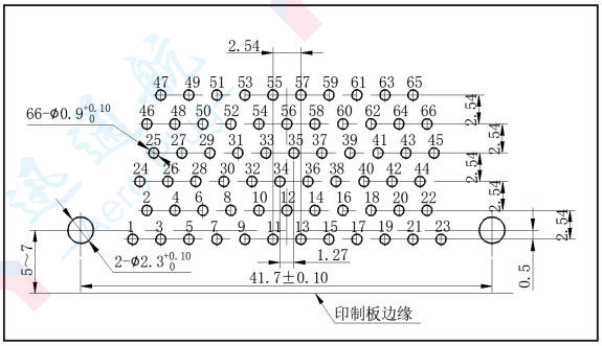

J30JA-66ZKW

J30J Series Micro-D Rectangular Electrical Connector/PCB Mounting Hole Dimensions .J30JA Right-Angle Mounted PCB Type W-J

PCB Mounting Hole Dimension Drawing

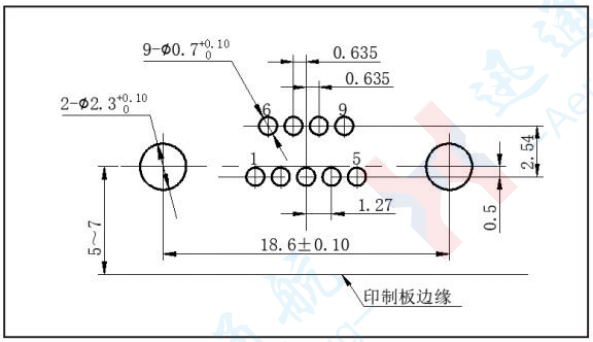

J30JA-9ZKW-J

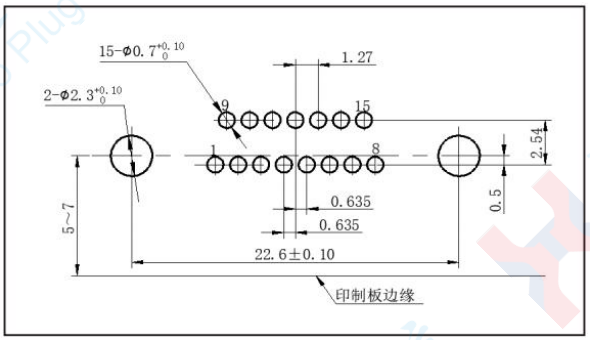

J30JA- 15ZKW-J

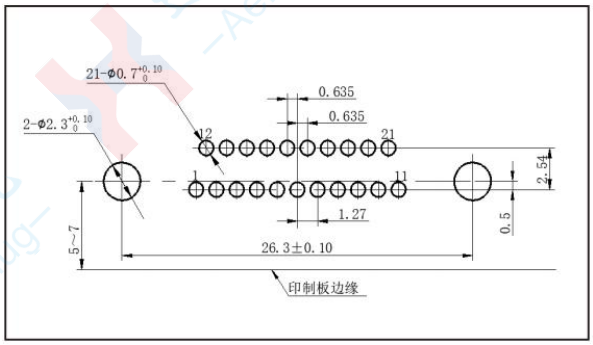

J30JA-21ZKW -J

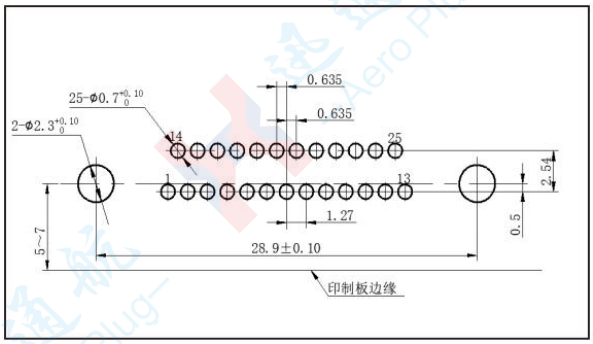

J30JA-25ZKW-J

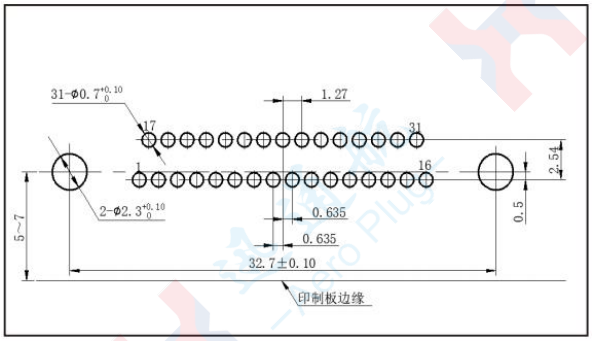

J30JA-31ZKW-J

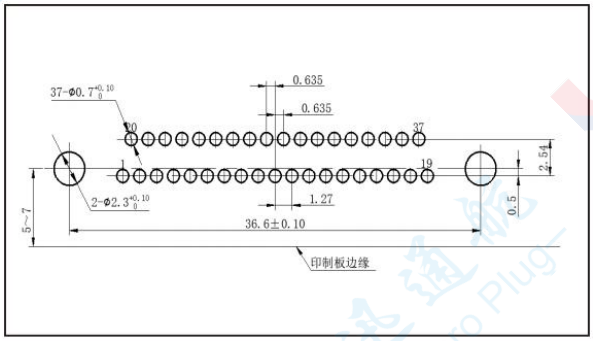

J30JA-37ZKW-J

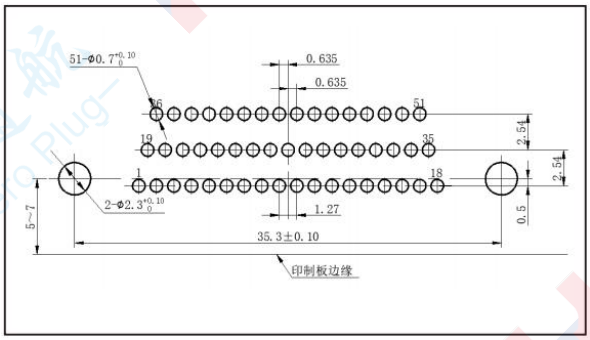

J30JA-51ZKW-J

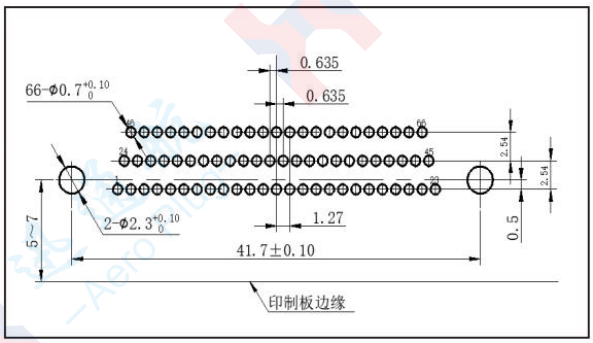

J30JA-66ZKW-J

PCB Mounting Hole Dimension Drawing

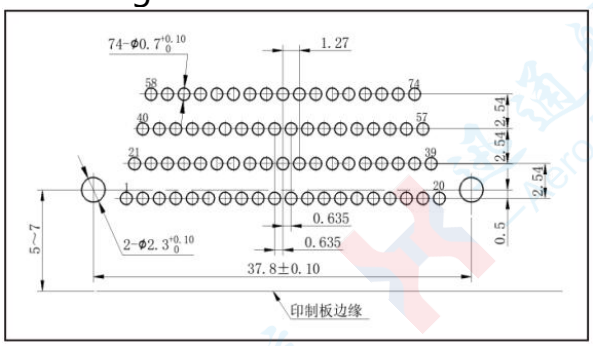

J30JA-74ZKW-J

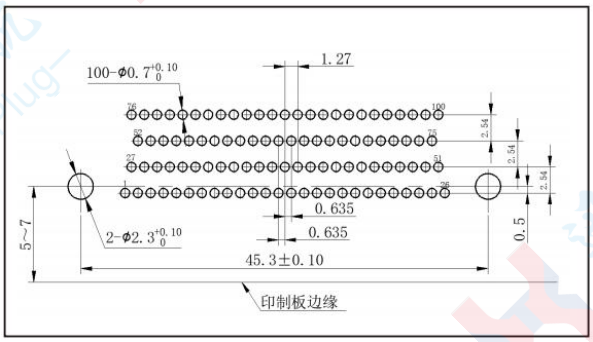

J30JA-100ZKW-J

J30J Series Micro Rectangular Electrical Connector/PCB Mounting Hole Dimensions

.J30JA Right-Angle Mounted PCB Type N

PCB Mounting Hole Dimension Drawing

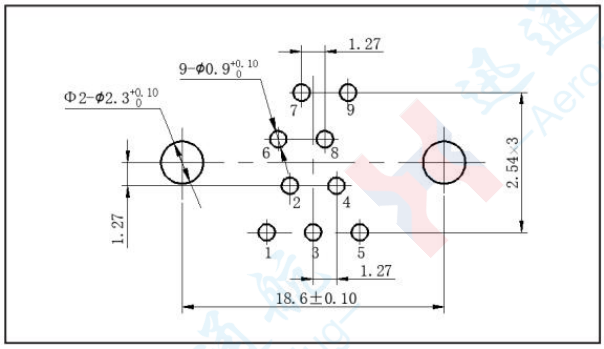

J30JA-9ZKN

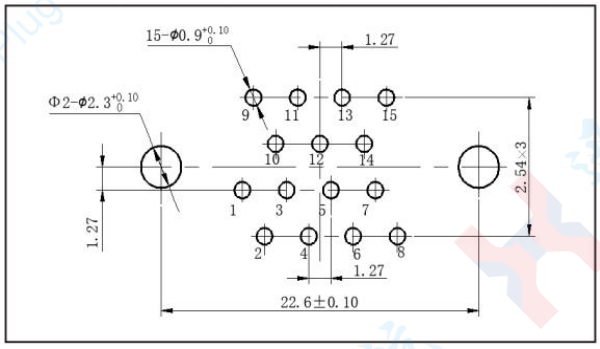

J30JA-15ZKN

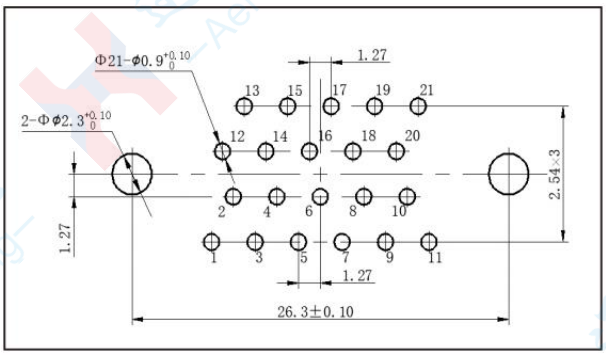

J30JA-21ZKN

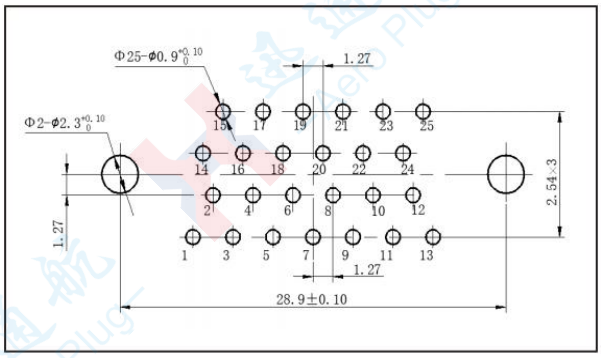

J30JA-25ZKN

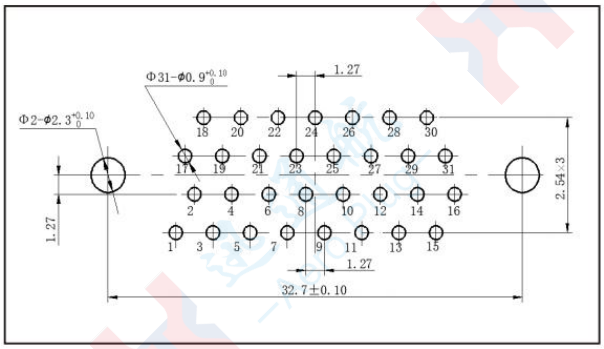

J30JA-31ZKN

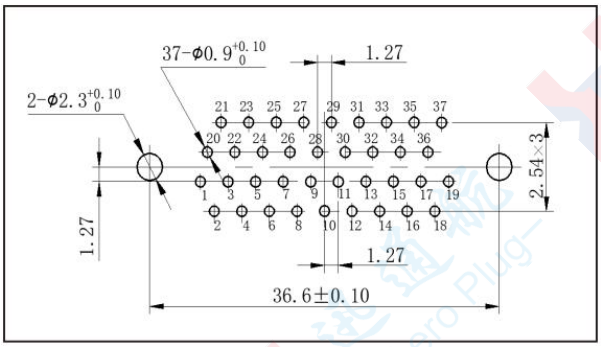

J30JA-37ZKN

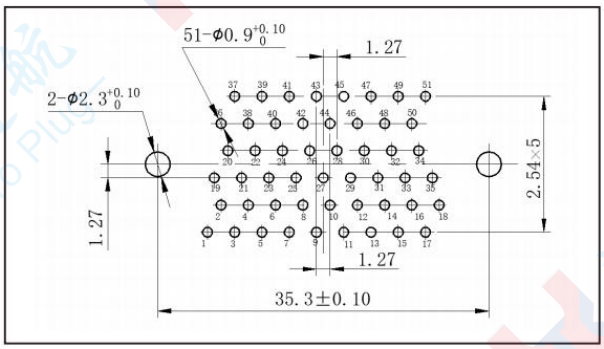

J30JA-51ZKN

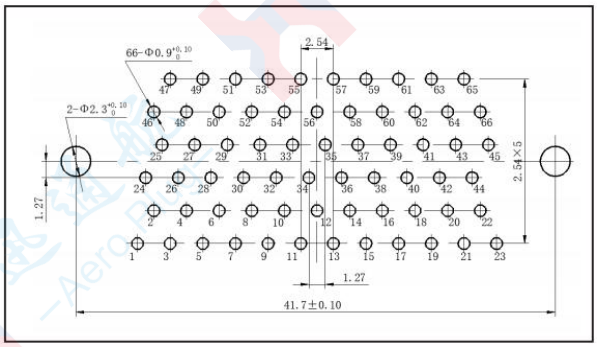

J30JA-66ZKN

J30J Series Micro Rectangular Electrical Connector/PCB Mounting Hole Dimensions .J30JA Right-Angle Mounted PCB Type N-J PCB Mounting Hole Dimension Drawing

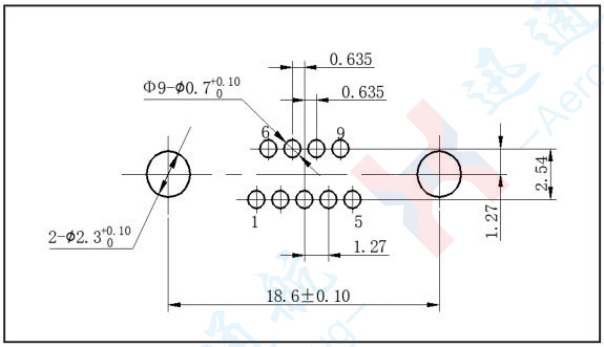

J30JA-9ZKN-J

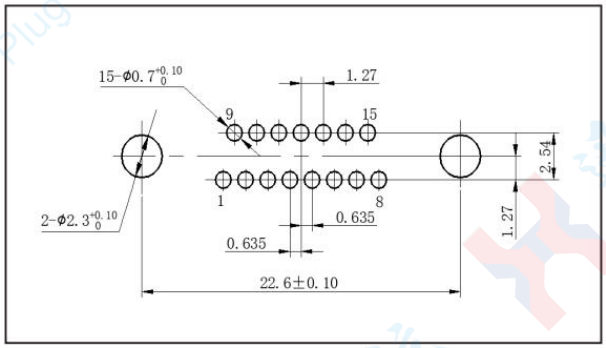

J30JA- 15ZKN-J

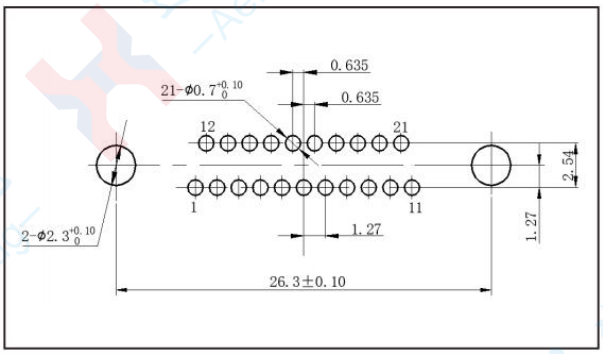

J30JA-21ZKN -J

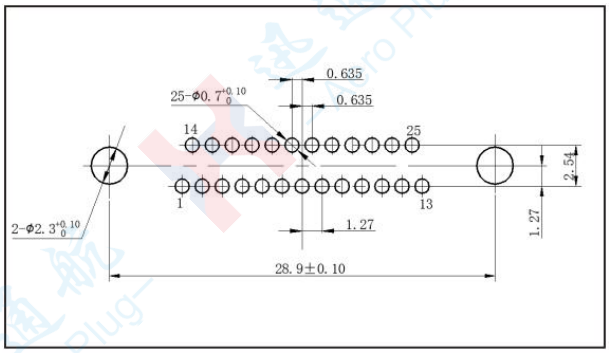

J30JA-25ZKN-J

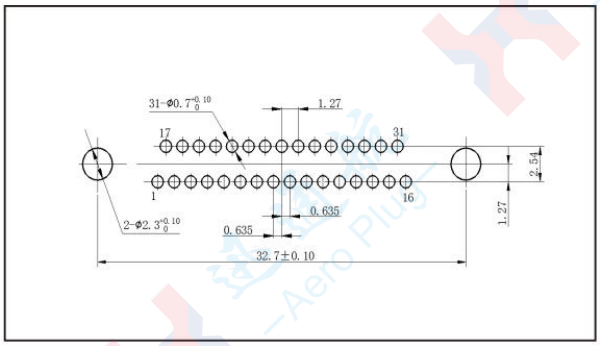

J30JA-31ZKN-J

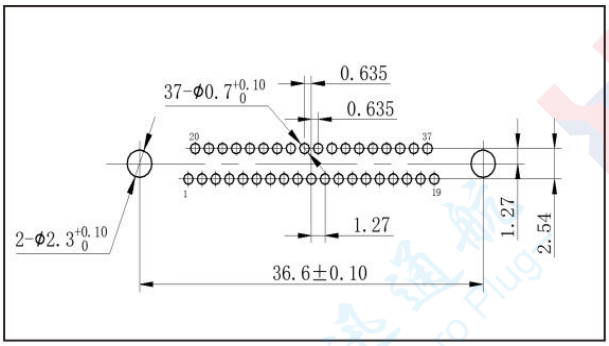

J30JA-37ZKN-J

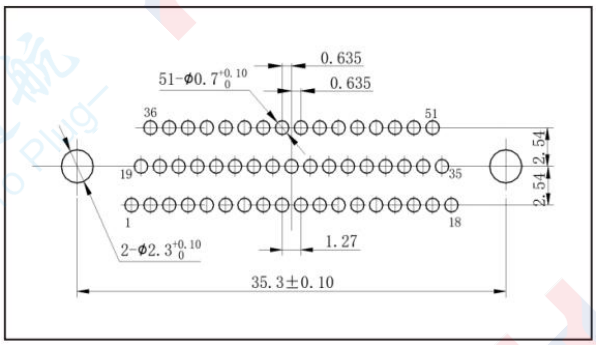

J30JA-51ZKN-J

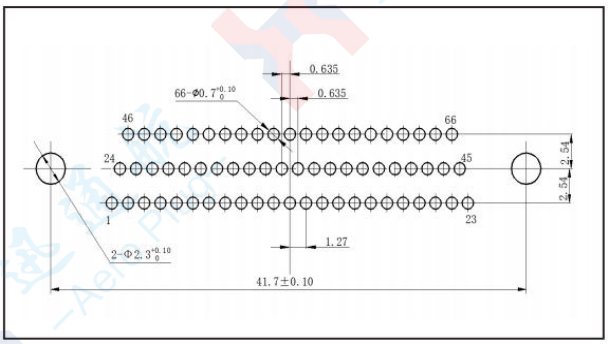

J30JA-66ZKN-J

PCB Mounting Hole Dimension Drawing

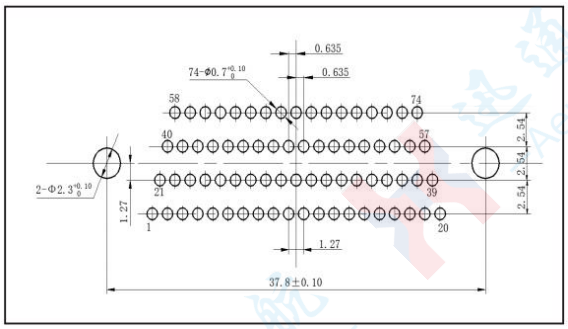

J30JA-74ZKN-J

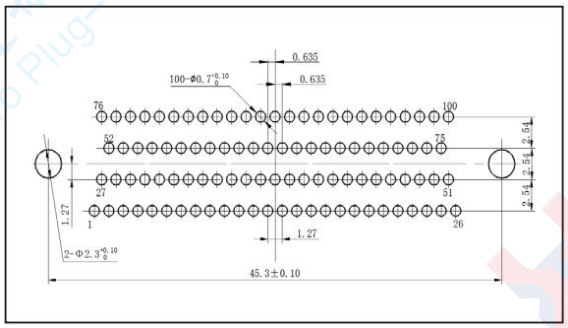

J30JA-100ZKN-J

J30JMI Micro Rectangular Electrical Connector

Product features

- Shell material: nickel-cobalt alloy
- There are nine types of specifications: 5, 9, 11, 13, 15, 21, 25, 31 and 37 cores
- This series of products are single-hole glass sintered sealed sockets, with a contact spacing of 1.27
- The plug is equipped with a twisted wire elastic twist needle, which is highly reliable and smooth to insert and unplug
- Sealing method: Glass sintering sealing is adopted, with a low leakage rate
- J30JMI-□ZKS19, J30JMI-□ZKS19-B, J30JMI-□zks19-Q99 can be used in conjunction with J30J-□TJ-Q60A and have a locking function
- When J30JMI-□ZKS19-Q25 is used in conjunction with J30J-□TJ-Q24-1 series plugs, it has a floating blind insertion function. When J30JMI-□ZKS-Q25 is used in conjunction with J30J-□TJ-Q24-2 series plugs, it has a locking function
- The product performance complies with the requirements of GJB2446 (equivalent to the US military standard MIL-C-83513)
- Execution standard: XTH-1 "Detailed Specification for J30J Series Micro Rectangular Electrical Connectors"

Technical characteristics

- Ambient temperature: -55℃ ~ +125℃
- Leakage rate: 1.0×10^{-3} Pa.cm³/s
- Vibration: 10Hz ~ 2000Hz 196m/s²
- Random Vibration: Power Spectral Density (PSD) 0.4 G²/Hz; Total Acceleration Root Mean Square (RMS) Value 23.1 G
- Shock: 980m/s² 6ms
- Rated Current: 3A
- Contact Resistance: ≤ 30mΩ
- Insulation Resistance: ≥ 5000MΩ 100V DC
- Dielectric Withstand Voltage: 300V
- Mechanical Life: 500 Cycles

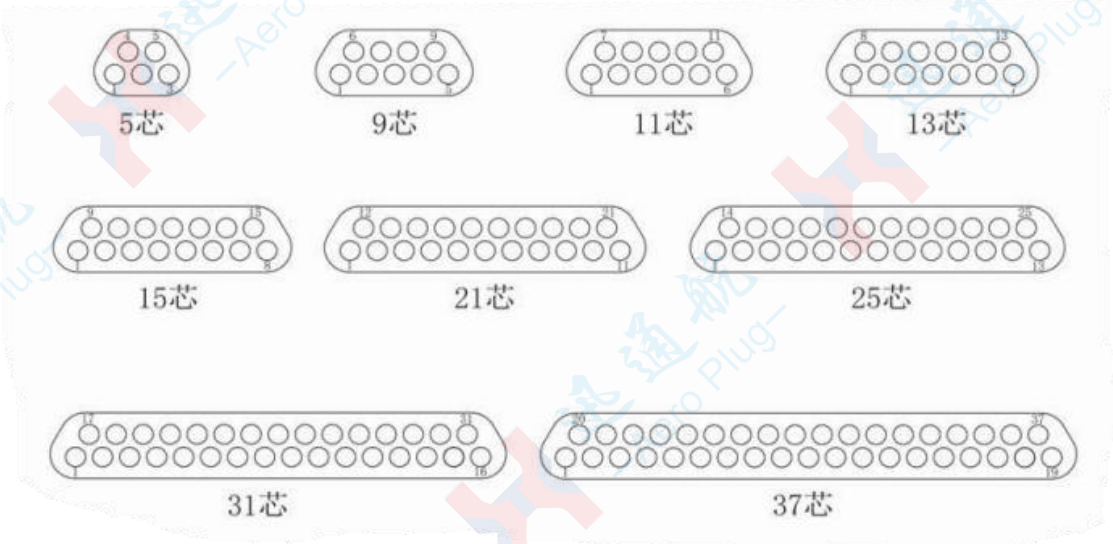

Note: Viewed from the mating end of the socket

Ordering Code Marking

J30J X- □ ZK X X

① ② ③ ④ ⑤ ⑥

① Main Designation Code: J30J

②Category: MI-Single-hole glass sintered seal

③Contact Type Spectrum: 5、9、11、13、15、21、25、31、37

④Connector & Contact Type: ZK-Socket with jack contactsv

⑤Contact Termination Type:

S- Soldered (with gold - bonded wire at tail end)

H-Soldered (with gold - bonded wire at tail end) (H、H1、H2、H3、HV9、S19)

SV9-Gold - bonded wire, with guide pin added at socket end

S19- Gold - bonded wire, modified tail end

⑥Series Code: Q1、Q2、Q3、Q6、Q25、Q45A、Q99、S19、S19-B

Q25: Without flange, with guide pinQ99: With additional mounting holes

B: Housing plating modified, suitable for soldering

Code Examples::

J30JMI-15ZKS19

This code denotes a single-hole sintered seal socket with 15 contacts, and the contacts are modified gold-bonded jacks at the tail end.

J30JMI-9ZKS-Q25

This code denotes a single-hole sintered seal socket with 9 contacts,and the contacts are gold-bonded jacks.

Product Stereogram

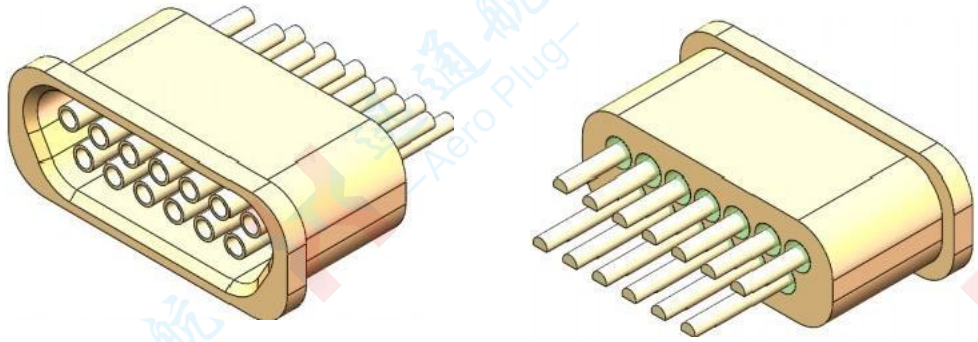

Product Model

Socket J30JMI-nZK5

Product Outline Dimension Drawing

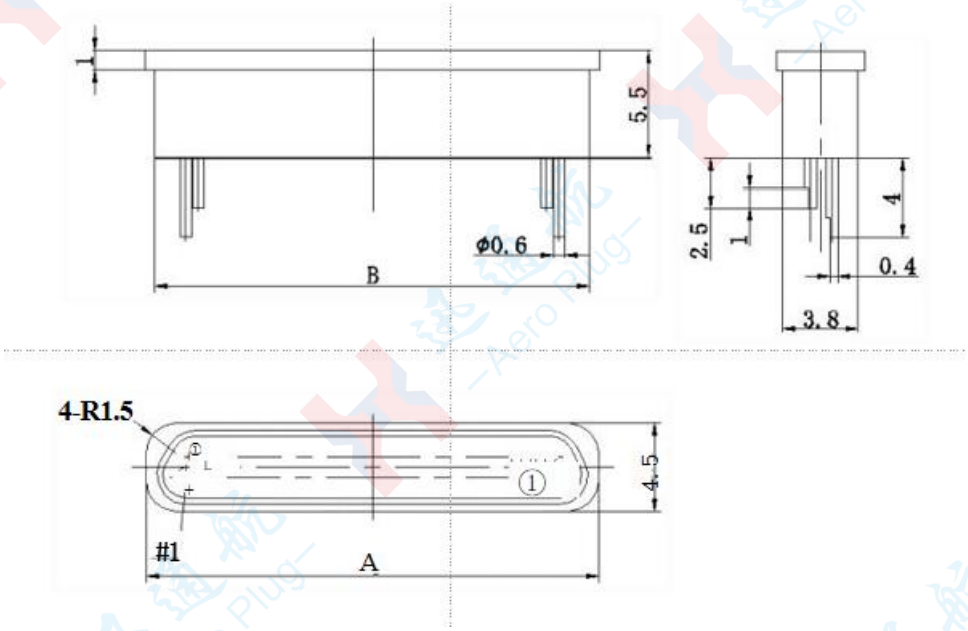

Product Model	A	B
J30JMI-9ZKS	9.2	8.2
J30JMI-13ZKS	11.7	10.7
J30JMI-15ZKS	13	12
J30JMI-21ZKS	16.8	15.8
J30JMI-25ZKS	19.3	18.3
J30JMI-31ZKS	23.2	22.2
J30JMI-37ZKS	27	26

Recommended Mounting Hole Dimensions

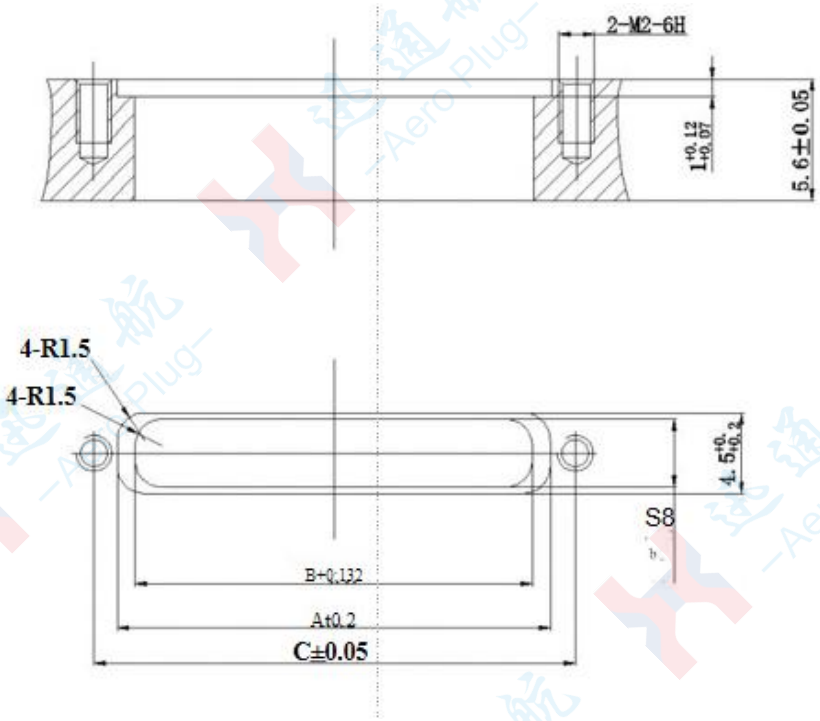

Product Model	A	B	C
J30JMI-9ZKS	9.2	8.2	13
J30JMI-13ZKS	11.7	10.7	15.5
J30JMI-15ZKS	13	12	16.8
J30JMI-21ZKS	16.8	15.8	20.6
J30JMI-25ZKS	19.3	18.3	23.1
J30JMI-31ZKS	23.2	22.2	16.9
J30JMI-37ZKS	27	26	30.7

Product Stereogram

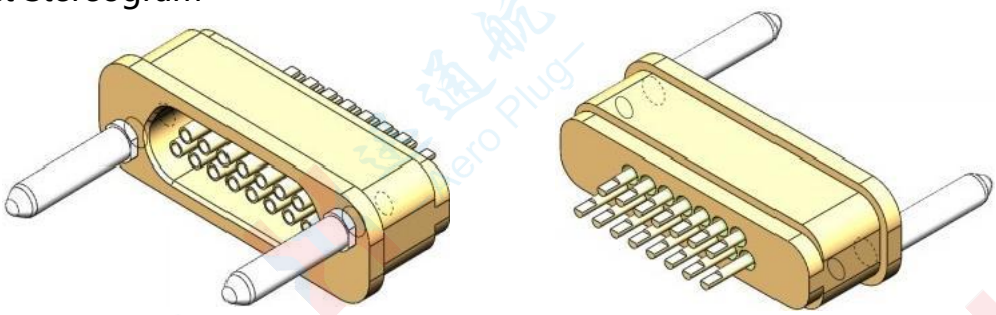

Product Model

Socket J30JMI-nZKS-Q25

Product Outline Dimension Drawing

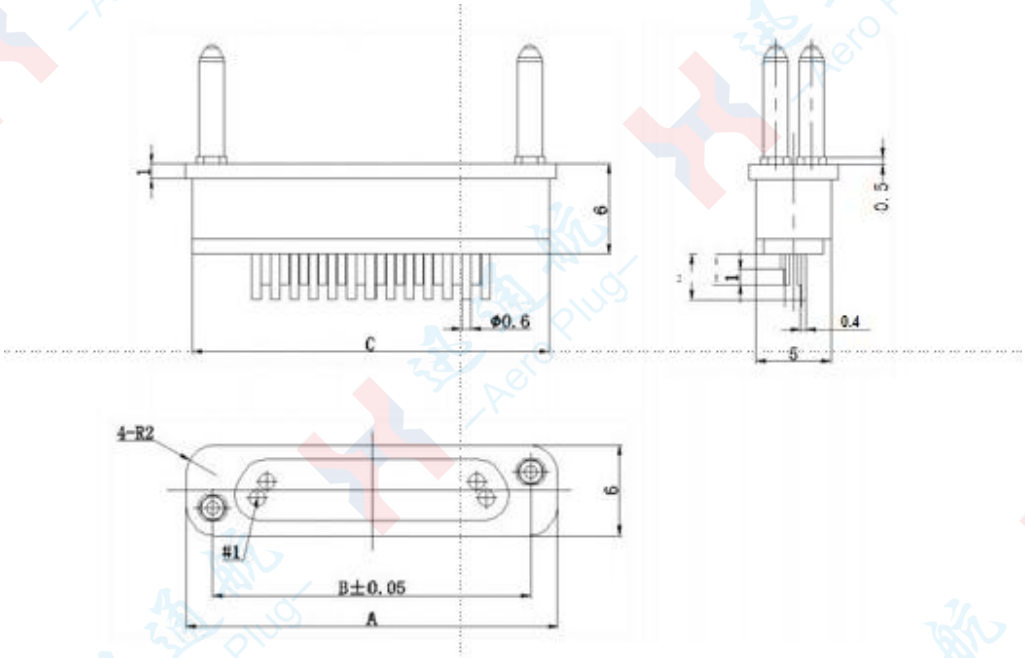

Product Model	A	B	C
J30JMI-9ZKS-Q25	14.7	11.1	13.7
J30JMI-15ZKS-Q25	18.45	14.85	17.45
J30JMI-21ZKS-Q25	22.3	18.7	21.3
J30JMI-25ZKS-Q25	24.8	21.2	23.8
J30JMI-31ZKS-Q25	28.6	25	27.6
J30JMI-37ZKS-Q25	32.4	28.8	31.4

Recommended Mounting Hole Dimensions

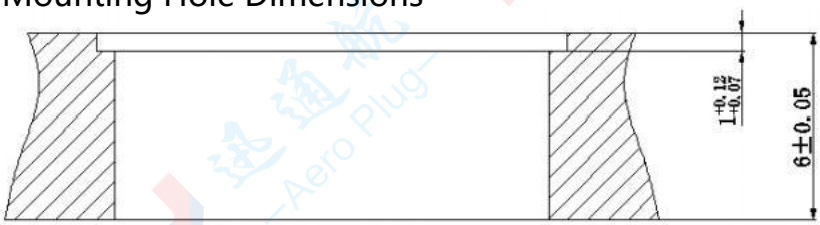

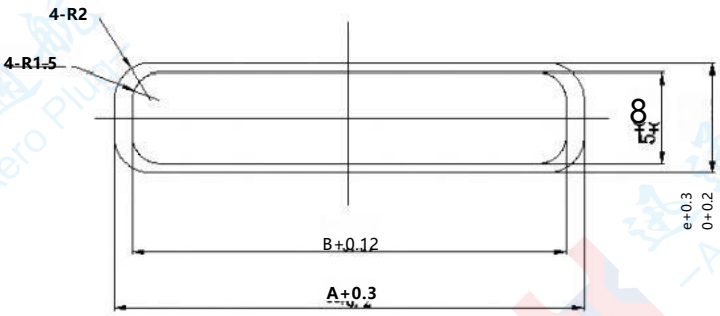

Product Model	A	B
J30JMI-9ZKS-Q25	14.7	13.7
J30JMI-15ZKS-Q25	18.45	17.45
J30JMI-21ZKS-Q25	22.3	21.3
J30JMI-25ZKS-Q25	24.8	23.8
J30JMI-31ZKS-Q25	28.6	27.6
J30JMI-37ZKS-Q25	32.4	31.4

Product Stereogram

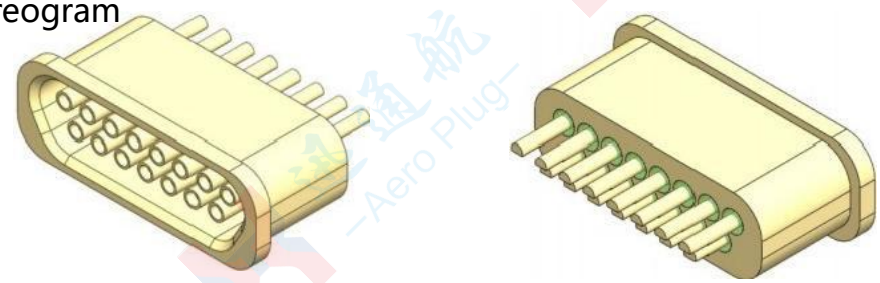

Product Model

Socket J30JMI-nZKS19/J30JMI-nZKS19-B

Product Outline Dimension Drawing

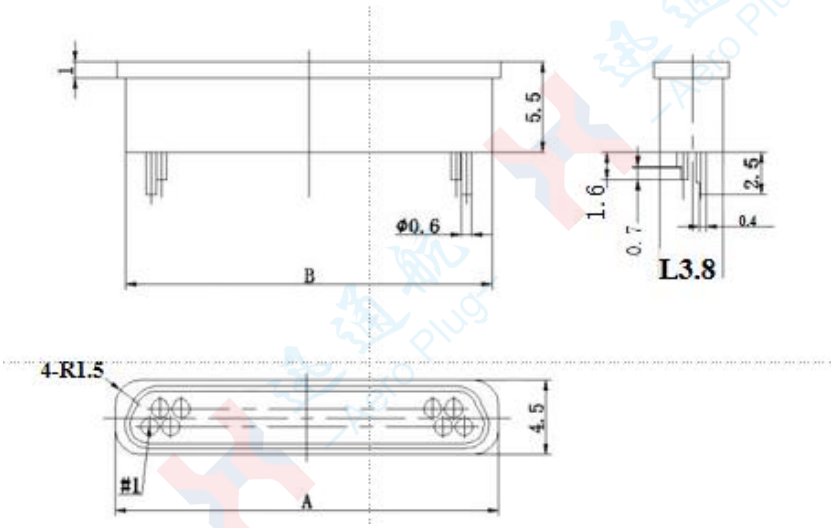

Product Model	A	B
J30JMI-9ZKS19 J30JMI-9ZKS19-B	9.2	8.2
J30JMI-13ZKS19 J30JMI-13ZKS19-B	11.7	10.7
J30JMI-15ZKS19 J30JMI-15ZKS19-B	13	12
J30JMI-21ZKS19 J30JMI-21ZKS19-B	16.8	15.8
J30JMI-25ZKS19 J30JMI-25ZKS19-B	19.3	18.3
J30JMI-31ZKS19 J30JMI-31ZKS19-B	23.2	22.2
J30JMI-37ZKS19 J30JMI-37ZKS19-B	27	26

Recommended Mounting Hole Dimensions

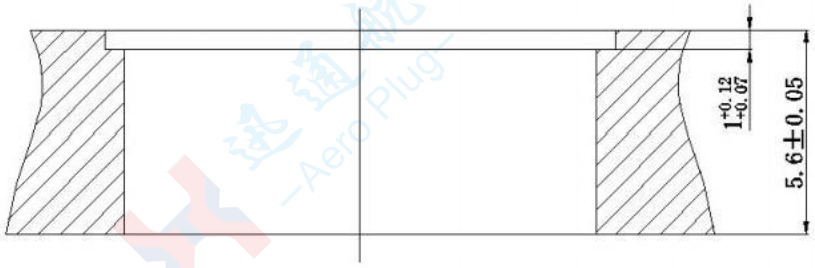

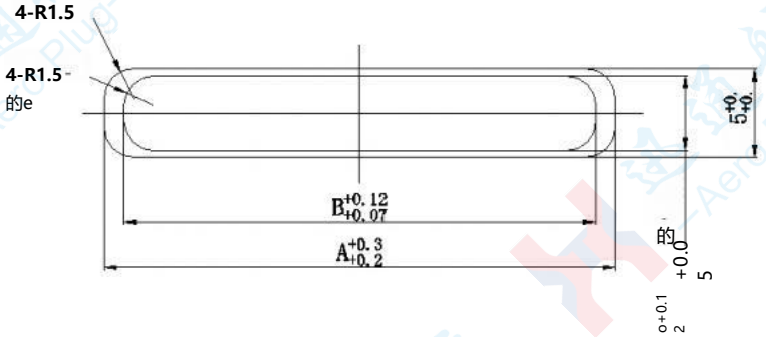

Product Model	A	B
J30JMI-9ZKS19 J30JMI-9ZKS19-B	9.2	8.2
J30JMI-13ZKS19 J30JMI-13ZKS19-B	11.7	10.7
J30JMI-15ZKS19 J30JMI-15ZKS19-B	13	12
J30JMI-21ZKS19 J30JMI-21ZKS19-B	16.8	15.8
J30JMI-25ZKS19 J30JMI-25ZKS19-B	19.3	18.3
J30JMI-31ZKS19 J30JMI-31ZKS19-B	23.2	22.2
J30JMI-37ZKS19 J30JMI-37ZKS19-B	27	26

Product Stereogram

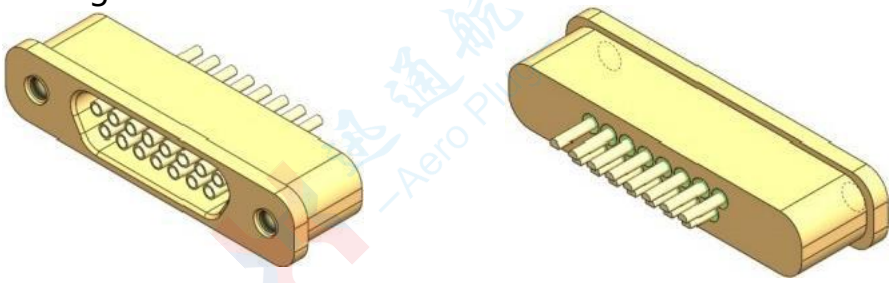

Product Model
Socket J30JMI-nZKS19-Q99

Product Outline Dimension Drawing

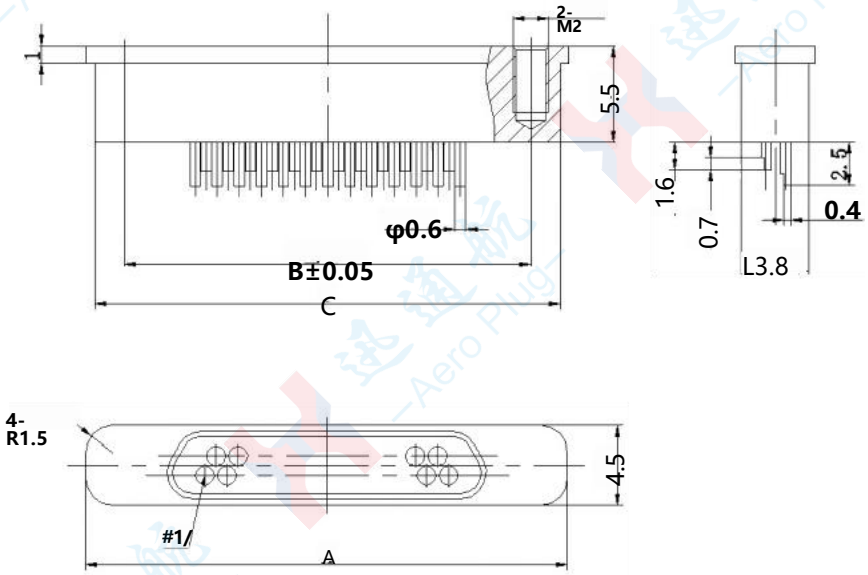

Product Model	A	B	C
J30JMI-9ZKS19-Q99	17.5	13.1	16.5
J30JMI-11ZKS19-Q99	18.8	14.4	17.8
J30JMI-13ZKS19-Q99	20	15.6	19
J30JMI-15ZKS19-Q99	21.3	16.87	20.3
J30JMI-21ZKS19-Q99	25	20.6	24
J30JMI-25ZKS19-Q99	27.6	23.2	26.6
J30JMI-31ZKS19-Q99	31.4	27	30.4
J30JMI-37ZKS19-Q99	35.3	30.9	34.3

Recommended Mounting Hole Dimensions

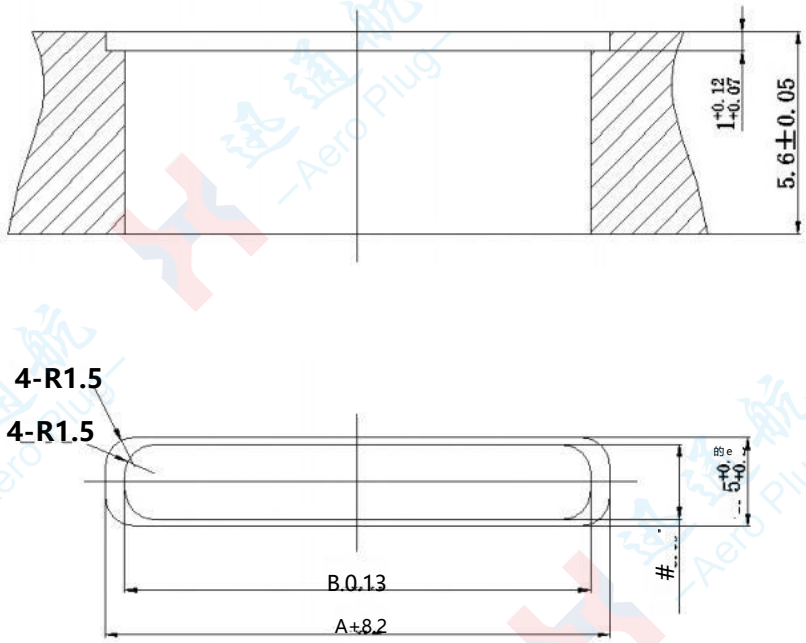

Product Model	A	B
J30JMI-9ZKS19-Q99	17.5	16.5
J30JMI-11ZKS19-Q99	18.8	17.8
J30JMI-13ZKS19-Q99	20	19
J30JMI-15ZKS19-Q99	21.3	20.3
J30JMI-21ZKS19-Q99	25	24
J30JMI-25ZKS19-Q99	27.6	26.6
J30JMI-31ZKS19-Q99	31.4	30.4
J30JMI-37ZKS19-Q99	35.3	34.3

Product Stereogram

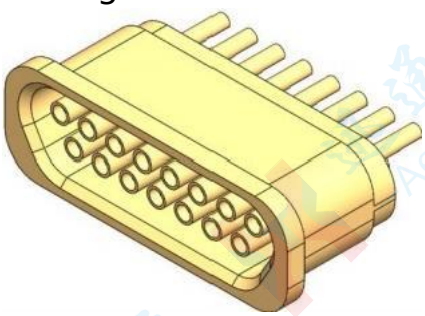

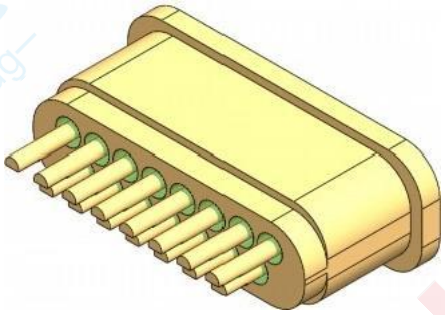

Product Model

Socket J30JMI-nZKH-Q45A

Product Outline Dimension Drawing

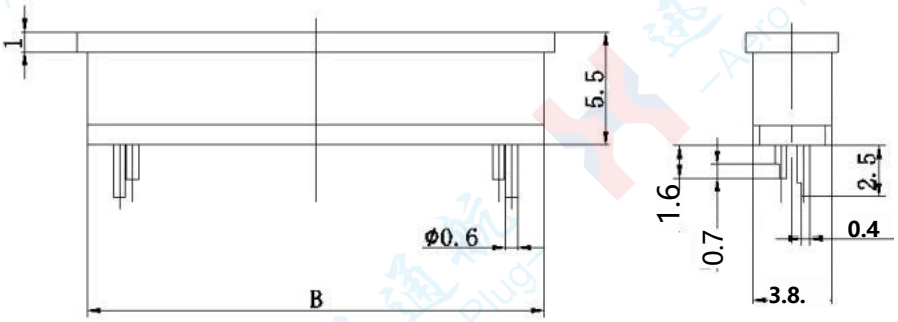

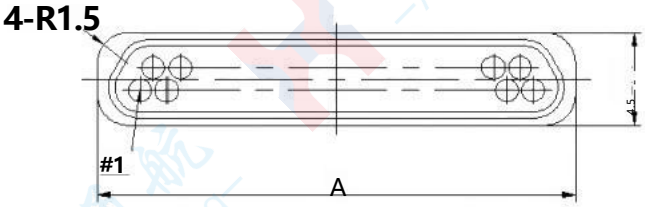

Product Model	A	B
J30JMI-5ZKH-Q45A	6.6	5.6
J30JMI-9ZKH-Q45A	9.2	8.2
J30JMI-11ZKH-Q45A	10.4	9.4
J30JMI-13ZKH-Q45A	11.7	10.7
J30JMI-15ZKH-Q45A	13	12
J30JMI-21ZKH-Q45A	16.8	15.8
J30JMI-25ZKH-Q45A	19.3	18.3
J30JMI-31ZKH-Q45A	23.2	22.2
J30JMI-37ZKH-Q45A	27	26

Recommended Mounting Hole Dimensions

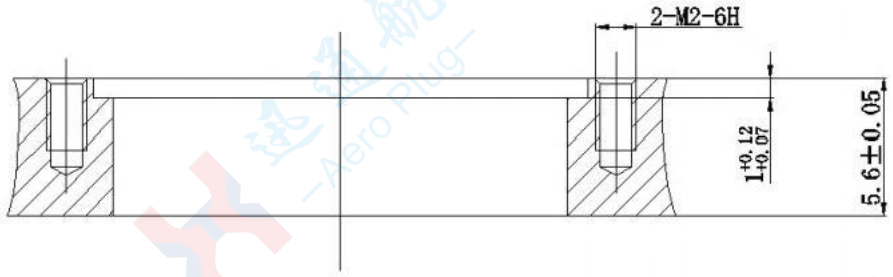

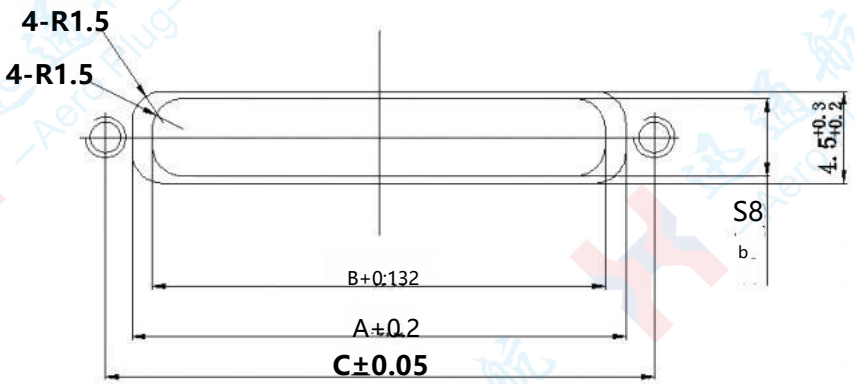

Product Model	A	B	C
J30JMI-5ZKH-Q45A	6.6	5.6	10.4
J30JMI-9ZKH-Q45A	9.2	8.2	13
J30JMI-11ZKH-Q45A	10.4	9.4	14.2
J30JMI-13ZKH-Q45A	11.7	10.7	15.5
J30JMI-15ZKH-Q45A	13	12	16.8
J30JMI-21ZKH-Q45A	16.8	15.8	20.6
J30JMI-25ZKH-Q45A	19.3	18.3	23.1
J30JMI-31ZKH-Q45A	23.2	22.2	26.9
J30JMI-37ZKH-Q45A	27	26	30.7

Product Stereogram

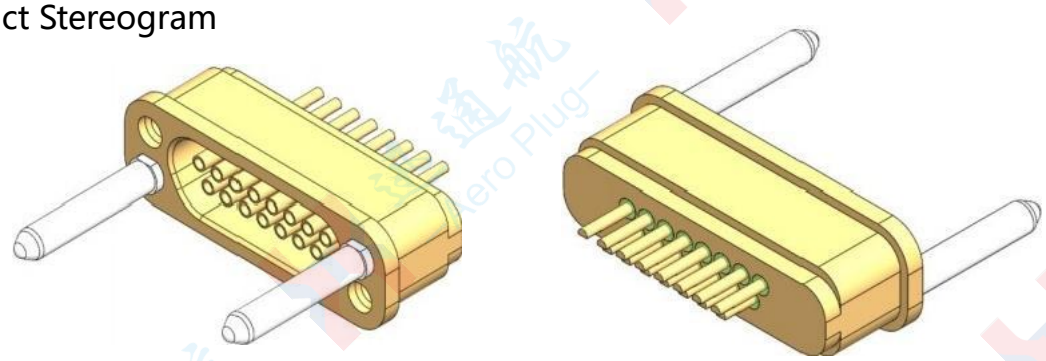

Product Model
S o c k e t J30JMI-nZKHV9-Q6

Product Outline Dimension Drawing

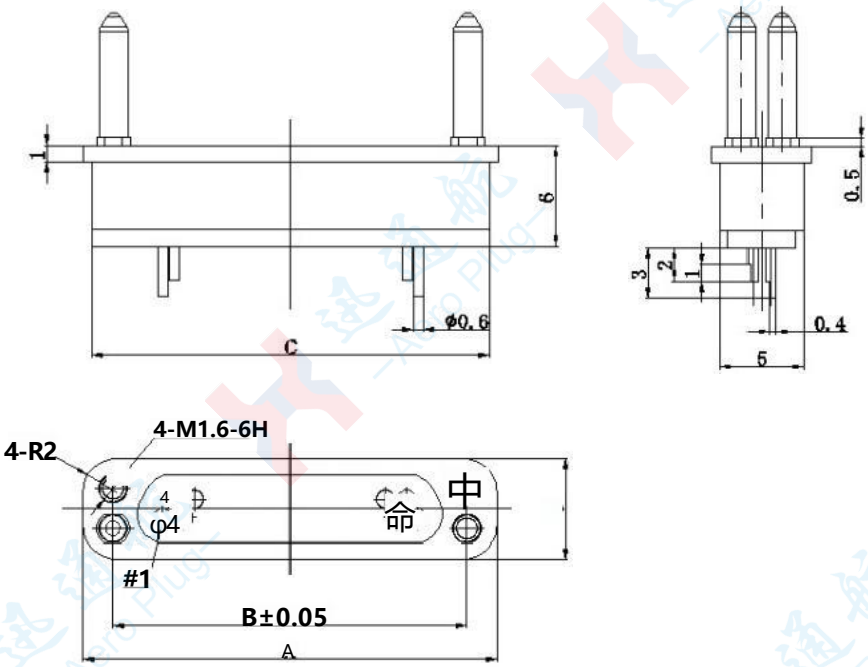

Product Model	A	B	C
J30JMI-9ZKHV9-Q6	14.7	11.1	13.7
J30JMI-15ZKHV9-Q6	18.45	14.85	17.45
J30JMI-21ZKHV9-Q6	22.3	18.7	21.3
J30JMI-25ZKHV9-Q6	24.8	21.2	23.8
J30JMI-31ZKHV9-Q6	28.6	25	27.6
J30JMI-37ZKHV9-Q6	32.4	28.8	31.4

Recommended Mounting Hole Dimensions

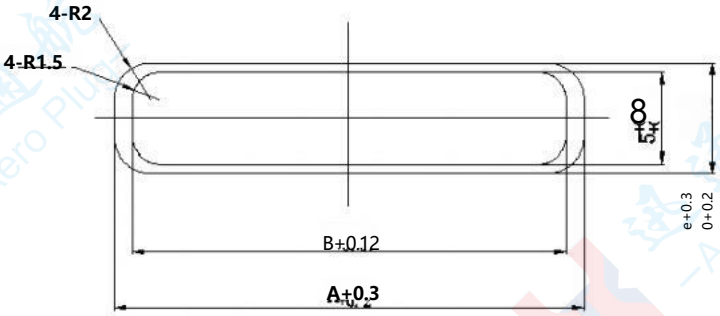

Product Model	A	B
J30JMI-9ZKHV9-Q6	14.7	13.7
J30JMI-15ZKHV9-Q6	18.45	17.45
J30JMI-21ZKHV9-Q6	22.3	21.3
J30JMI-25ZKHV9-Q6	24.8	23.8
J30JMI-31ZKHV9-Q6	28.6	27.6
J30JMI-37ZKHV9-Q6	32.4	31.4

Product Stereogram

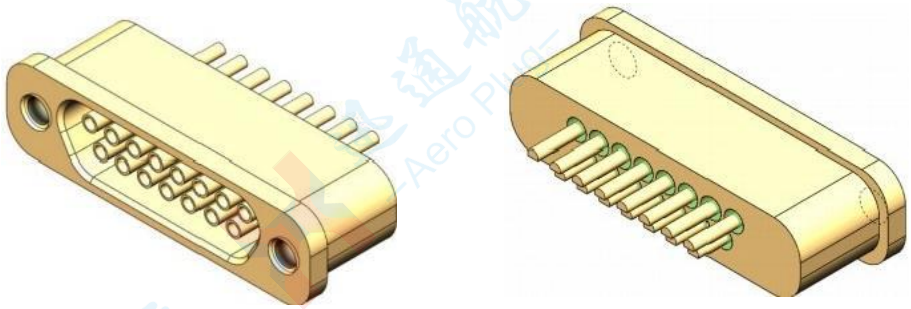

Product Model

Socket J30JMI-nZKH1-Q3

Product Outline Dimension Drawing

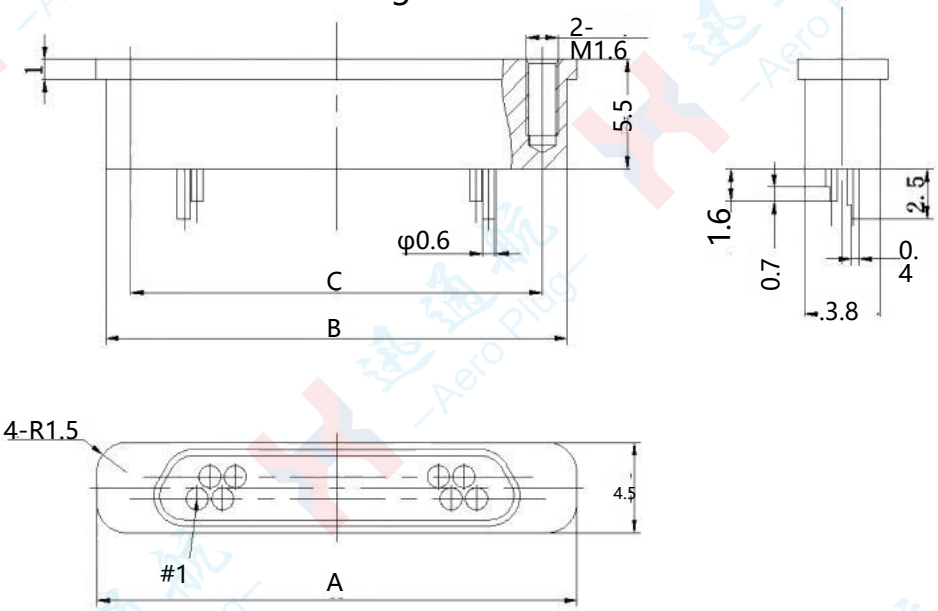

Product Model	A	B	B
J30JMI-5ZKH1-Q3	11.2	10.3	7.9
J30JMI-9ZKH1-Q3	13.7	12.8	10.44
J30JMI-11ZKH1-Q3	15.8	14.9	12.5
J30JMI-13ZKH1-Q3	17.3	16.3	13.9
J30JMI-15ZKH1-Q3	17.5	16.5	14.25
J30JMI-21ZKH1-Q3	21.3	20.4	18.06
J30JMI-25ZKH1-Q3	24	23	20.6
J30JMI-31ZKH1-Q3	27.7	26.8	24.4
J30JMI-37ZKH1-Q3	31.5	30.5	28.2

Recommended Mounting Hole Dimensions

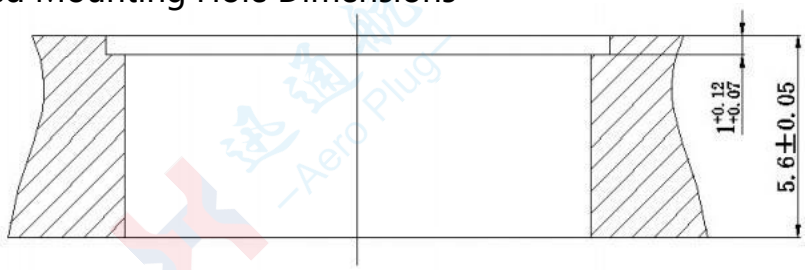

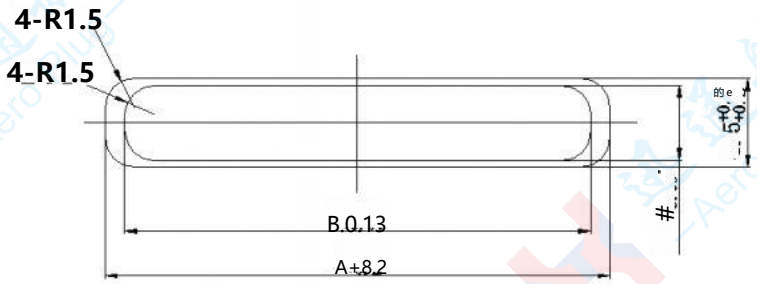

Product Model	A	B
J30JMI-5ZKH1-Q3	11.2	10.3
J30JMI-9ZKH1-Q3	13.7	12.8
J30JMI-11ZKH1-Q3	15.8	14.9
J30JMI-13ZKH1-Q3	17.3	16.3
J30JMI-15ZKH1-Q3	17.5	16.5
J30JMI-21ZKH1-Q3	21.3	20.4
J30JMI-25ZKH1-Q3	24	23
J30JMI-31ZKH1-Q3	27.7	26.8
J30JMI-37ZKH1-Q3	31.5	30.5

Recommended Mounting Hole Dimensions

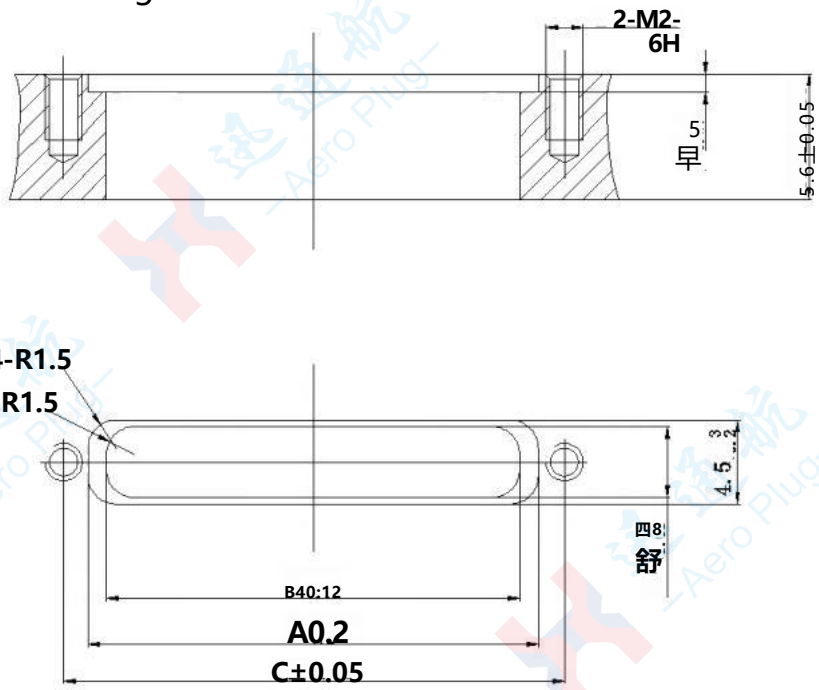

Product Model	A	B	C
J30JMI-5ZKH2-Q1	6.6	5.6	10.46
J30JMI-9ZKH2-Q1	9.2	8.2	13
J30JMI-11ZKH2-Q1	10.4	9.4	14.27
J30JMI-13ZKH2-Q1	11.7	10.7	15.5
J30JMI-15ZKH2-Q1	13	12	16.8
J30JMI-21ZKH2-Q1	16.8	15.8	20.6
J30JMI-25ZKH2-Q1	19.3	18.3	23.1
J30JMI-31ZKH2-Q1	23.2	22.2	26.9
J30JMI-37ZKH2-Q1	27	26	30.7

Product Stereogram

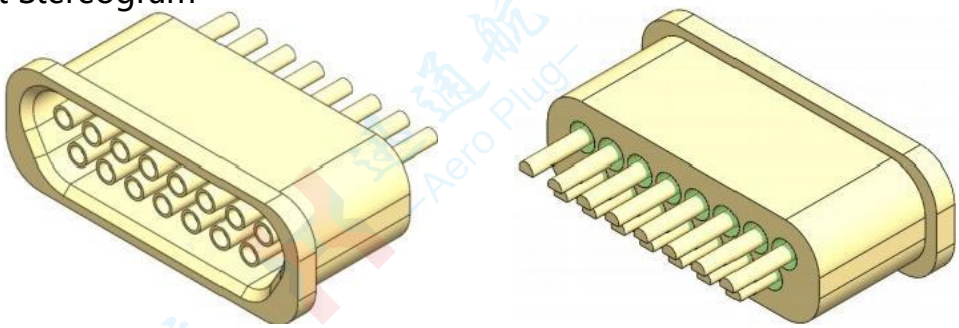

Product Model

Socket J30JMI-nZKH2-Q1

Product Outline Dimension Drawing

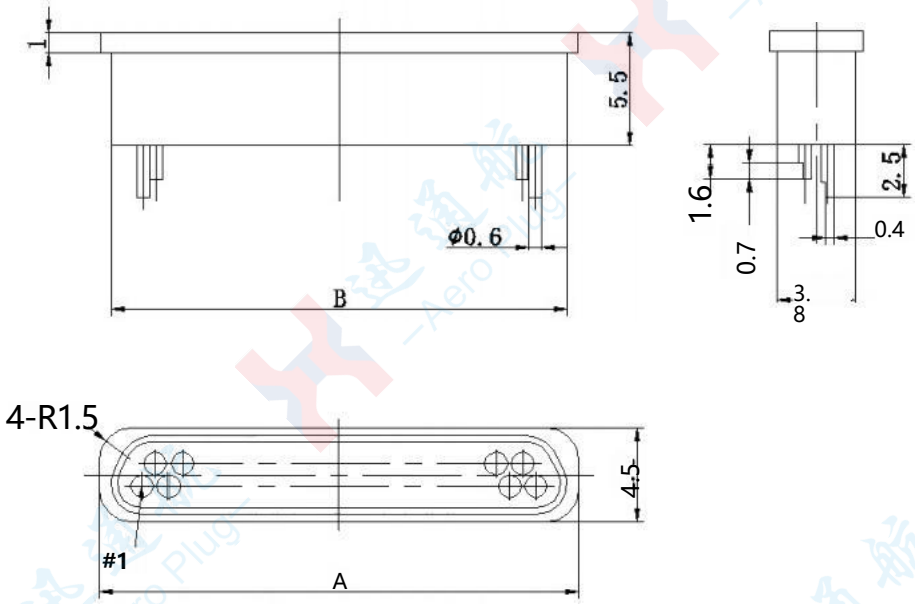

Product Model	A	B
J30JMI-5ZKH2-Q1	6.6	5.6
J30JMI-9ZKH2-Q1	9.2	8.2
J30JMI-11ZKH2-Q1	10.4	9.4
J30JMI-13ZKH2-Q1	11.7	10.7
J30JMI-15ZKH2-Q1	13	12
J30JMI-21ZKH2-Q1	16.8	15.8
J30JMI-25ZKH2-Q1	19.3	18.3
J30JMI-31ZKH2-Q1	23.2	22.2
J30JMI-37ZKH2-Q1	27	26

Product Stereogram

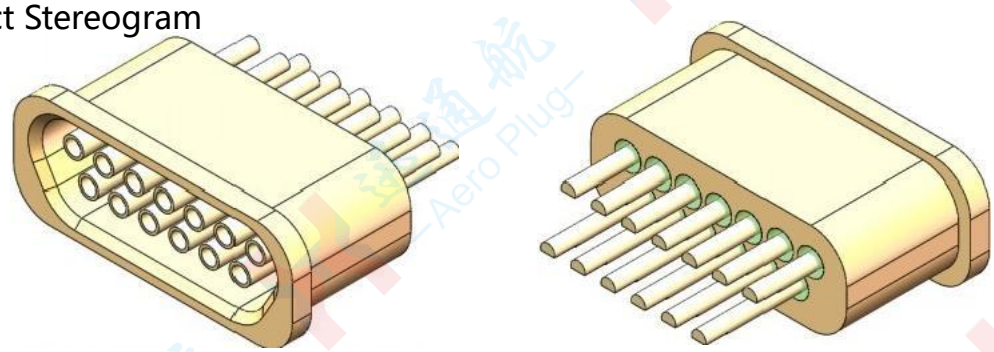

Product Model
Socket J30JMI-nZKH2-Q2

Product Outline Dimension Drawing

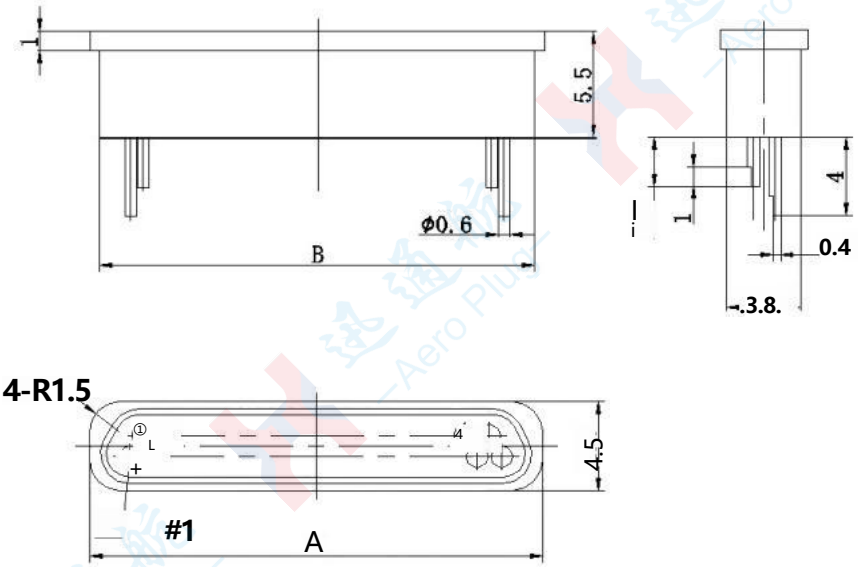

Product Model	A	B
J30JMI-5ZKH2-Q2	6.6	5.6
J30JMI-9ZKH2-Q2	9.2	8.2
J30JMI-11ZKH2-Q2	10.4	9.4
J30JMI-13ZKH2-Q2	11.7	10.7
J30JMI-15ZKH2-Q2	13	12
J30JMI-21ZKH2-Q2	16.8	15.8
J30JMI-25ZKH2-Q2	19.3	18.3
J30JMI-31ZKH2-Q2	23.2	22.2
J30JMI-37ZKH2-Q2	27	26

Recommended Mounting Hole Dimensions

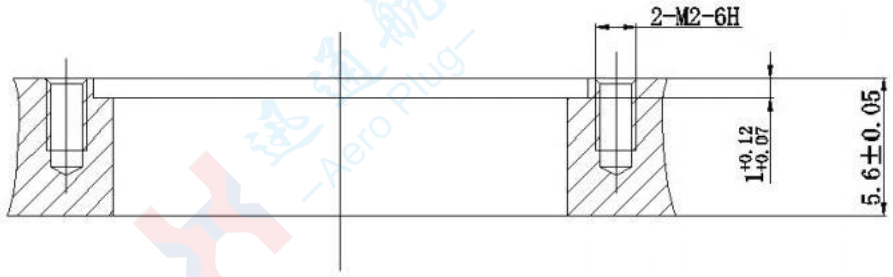

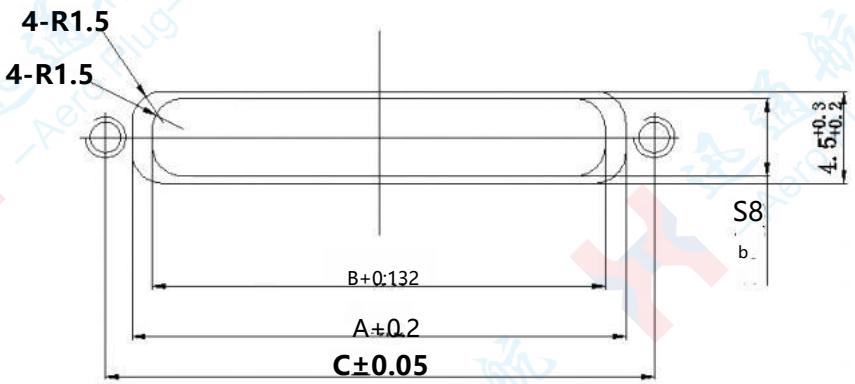

Product Model	A	B	C
J30JMI-5ZKH2-Q2	6.6	5.6	10.46
J30JMI-9ZKH2-Q2	9.2	8.2	13
J30JMI-11ZKH2-Q2	10.4	9.4	14.27
J30JMI-13ZKH2-Q2	11.7	10.7	15.5
J30JMI-15ZKH2-Q2	13	12	16.8
J30JMI-21ZKH2-Q2	16.8	15.8	20.6
J30JMI-25ZKH2-Q2	19.3	18.3	23.1
J30JMI-31ZKH2-Q2	23.2	22.2	26.9
J30JMI-37ZKH2-Q2	27	26	30.7

Product Stereogram

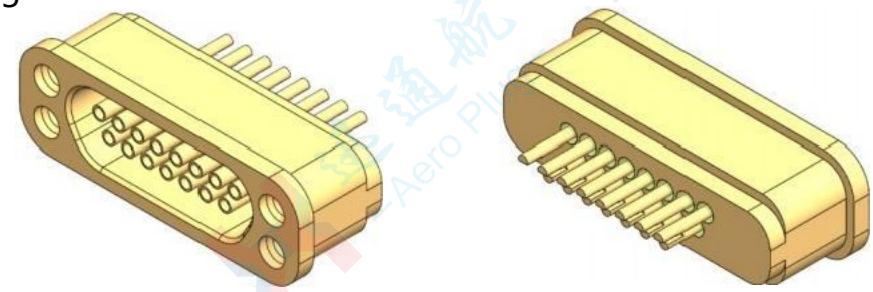

Product Model

S o c k e t J30JMI-nZKH3-Q6

Product Outline Dimension Drawing

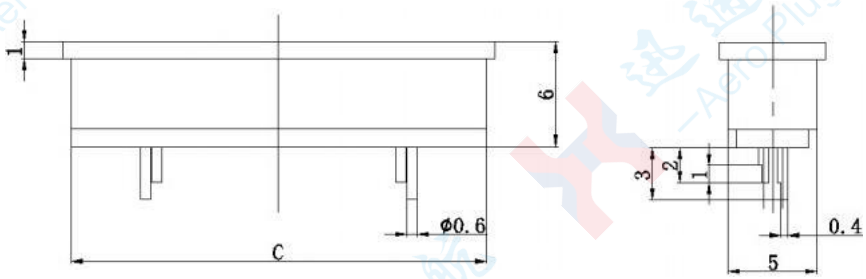

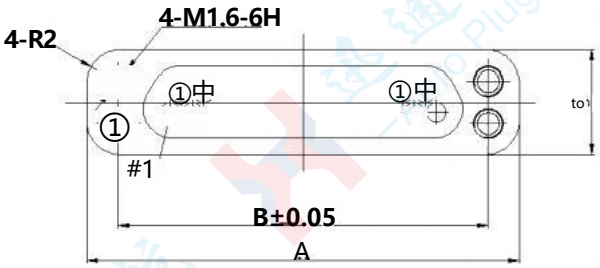

Product Model	A	B	C
J30JMI-9ZKH3-Q6	14.7	11.1	13.7
J30JMI-15ZKH3-Q6	18.45	14.85	17.45
J30JMI-21ZKH3-Q6	22.3	18.7	21.3
J30JMI-25ZKH3-Q6	24.8	21.2	23.8
J30JMI-31ZKH3-Q6	28.6	25	27.6
J30JMI-37ZKH3-Q6	32.4	28.8	31.4

Recommended Mounting Hole Dimensions

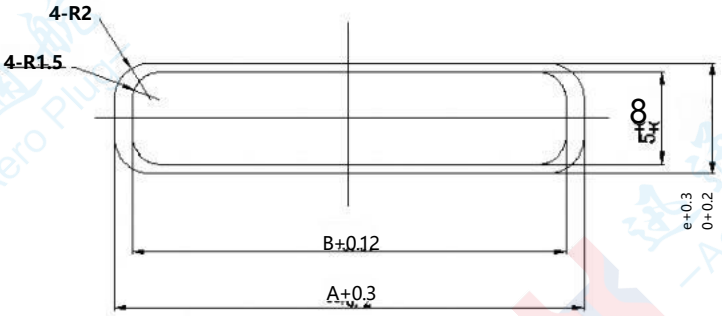

Product Model	A	B
J30JMI-9ZKH3-Q6	14.7	13.7
J30JMI-15ZKH3-Q6	18.45	17.45
J30JMI-21ZKH3-Q6	22.3	21.3
J30JMI-25ZKH3-Q6	24.8	23.8
J30JMI-31ZKH3-Q6	28.6	27.6
J30JMI-37ZKH3-Q6	32.4	31.4

J30JSeries Electrical Connector with Mixed Large and Small Current Contacts

Product Features

- Mixed Assembly of Large and Small Current Contact Pairs
- Conductor Core Cross-Sectional Area: 0.1mm² ~ 0.15mm² (for small current); 2.0mm² ~ 3.0mm² (for large current)
- Widely used for circuit connection in various electronic equipment such as aerospace, aviation, and electronic computers.
- Product performance meets the requirements of GJB2446, equivalent to US military standard MIL-DT-83513.
- Executive Standard: "Detailed Specification for J30J Series Micro-Rectangular Electrical Connectors"

Technical Characteristics

- Ambient Temperature: -55℃ ~ +125℃
- Vibration: 10Hz ~ 2000Hz 196m/s2
- Random Vibration: Power Spectral Density (PSD) 0.4G²/Hz; Total Acceleration Root Mean Square (RMS) Value 23.1G
- Shock: 735m/s2 11ms
- Rated Current: 3A
- Contact Resistance: ≤ 10mΩ
- Insulation Resistance: ≥ 5000MΩ
- Dielectric Withstand Voltage: 800V
- Mechanical Life: 500 Cycles

Type Spectrum Arrangement

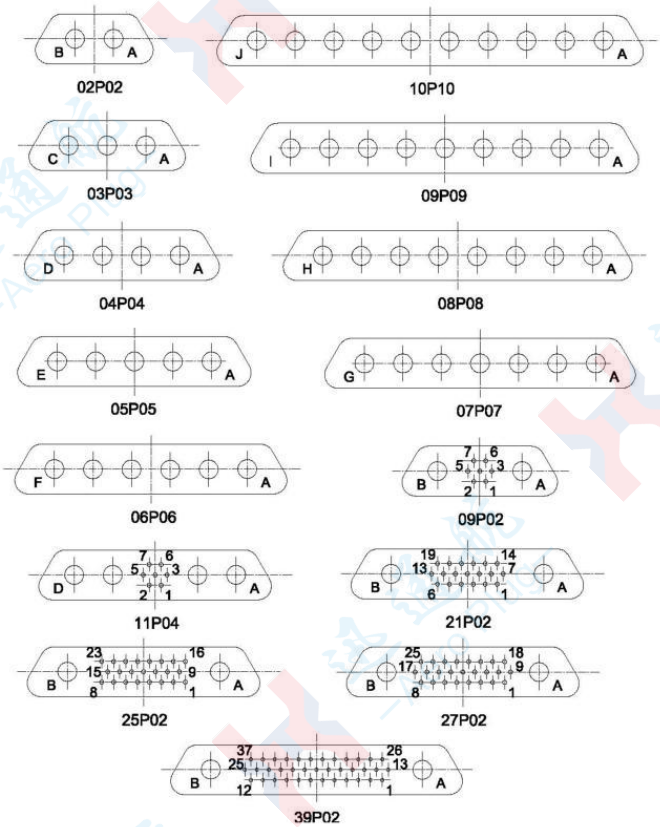

Note: Viewed from the plug mating end

Model Naming

J30J XXPXX X X X X X X X(Additional Notes)
① ② ③ ④ ⑤ ⑥ ⑦ ⑧ ⑨

①Main Designation Code：J30J
② Contact Arrangement: See the following table

Code	Arrangement Rules	Code	Arrangement Rules
02P02	2-core 20A Contac	10P10	10-core 20A Contact
03P03	3-core 20A Contact	09P02	7-core 3A Contact + 2-core 20A Contact
04P04	4-core 20A Contact	11P04	7-core 3A Contact + 4-core 20A Contact
05P05	5-core 20A Contact 件	21P02	19-core 3A Contact + 2-core 20A Contact
06P06	6-core 20A Contact	25P02	23-core 3A Contact + 2-core 20A Contact
07P07	7-core 20A Contact	27P02	25-core 3A Contact + 2-core 20A Contact
08P08	8-core 20A Contact	39P02	37-core 3A Contact + 2-core 20A Contact
09P09	9-core 20A Contact		

③Low-Current Contact Type：0—No low-current contact J— Low-current pin (3A)
K— Low-current socket (3A)

④ High-Current Contact Type：S—High-current socket（20A） P—High-current pin (（20A)

⑤ Termination Configuration of Low-Current Contact：000—No low-current contact
C00—Crimp termination, conductor cross-sectional area 0.10mm²～0.15mm²
S00— Solder termination， N01—Straight-through rigid board mount

⑥ Termination Configuration of High-Current Contact：C0—Crimp termination, conductor cross-sectional area 2.0mm²～3.0mm²，S0—Solder termination，N1—Straight-through rigid board mount W1—Right-angle printed circuit board (PCB) mount

⑦Locking Accessory Specification：000—No locking accessory L00— Free-end locking accessory
P□□— Fixed-end locking accessory (refer to the table below)

Code	Locking Accessory Type	Code	Locking Accessory Type
P00	Front-panel Mount Fixed-end Locking Component, Mounting Panel Thickness ≤2.5mm	P08	3.4mm Rear-panel Mount Fixed-end Locking Component
P03	Straight PCB Mount Fixed-end Locking Component with Support Sleeve	P09	2mm Rear-panel Mount Fixed-end Locking Component
P04	Right-angle PCB Mount Fixed-end Locking Component with Mounting Bracket	P10	Right-angle PCB Mount (2mm), Rear-panel Mount Fixed-end Locking Component
P05	0.6mm Rear-panel Mount Fixed-end Locking Component	P11	Front-panel Mount Fixed-end Locking Component with M3 Threaded Mounting Hole
P06	1.4mm Rear-panel Mount Fixed-end Locking Component	P12	Front-panel Mount Fixed-end Locking Component, Mounting Panel Thickness ≤5.5mm
P07	2.2mm Rear-panel Mount Fixed-end Locking Component		

⑧ Housing Modification:： 0 — Standard type, aluminum alloy with electroless nickel plating
⑨ Rear Accessory： Not indicated — No rear accessory

Note:Accessory descriptions are not part of the naming convention and shall be specified in the purchase contract or agreement.

Product Family Tree

- 插头（座）合件
  - 压接式
    - J30J□□P□□ □ S □□□ C0 □□□ 0（插头合件）
    - J30J□□P□□ □ P □□□ C0 □□□ 0（插座合件）
  - 焊接式
    - J30J□□P□□ □ S □□□ S0 □□□ 0（插头合件）
    - J30J□□P□□ □ P □□□ S0 □□□ 0（插座合件）
  - 直插式
    - J30J□□P□□ □ S □□□ N1 □□□ 0（插头合件）
    - J30J□□P□□ □ P □□□ N1 □□□ 0（插座合件）
  - 弯插式
    - J30J□□P□□ □ S □□□ W1 □□□ 0（插头合件）
    - J30J□□P□□ □ P □□□ W1 □□□ 0（插座合件）

Locking Accessory

- 锁紧附件
  - 自由端锁紧附件 —— J30JL(适配压接式及焊接式)
  - 直插式
    - J30JP、J30JP0、J30JP3、J30JP4、J30JP8、J30JP11 J30JP43、J30JP45适配压接式及焊接式连接器
    - J30JP5（适配直插式连接器）
    - J30JP42、J30JP33（适配弯插连接器）

Rear Accessory

When selecting J30J series high-current hybrid products, users must choose both the plug (socket) assembly and the locking accessory to form a complete plug-and-socket set.

Crimp Termination

.Plug J30J□□P□□□S□□□C00000

Socket J30J□□P□□□P□□□C00000

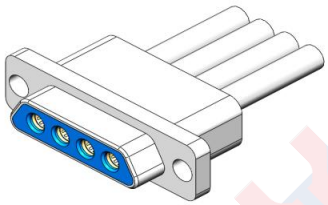

J30J04P040S000C00000

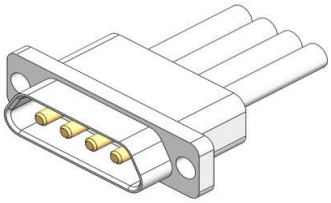

J30J04P040P000C00000

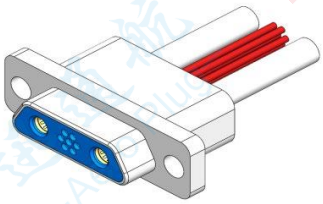

J30J09P02JSC00C00000

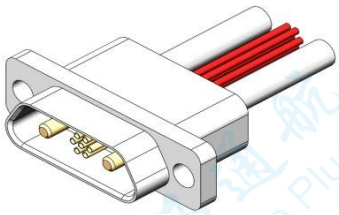

J30J09P02KPC00C00000

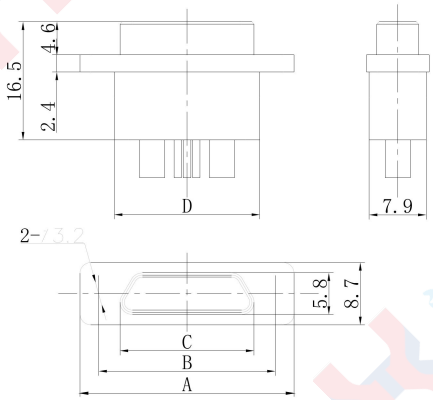

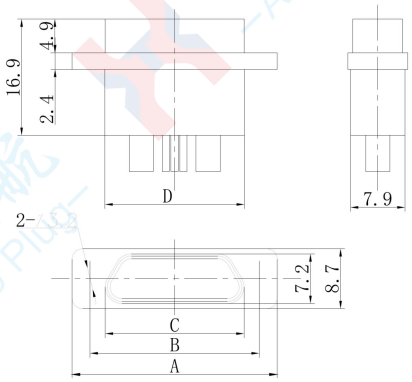

Plug Model	Dimensions				Socket Model	Dimensions			
	A	B	C	D		A	B	C	D
J30J02P020S000C00000	23.2	18.8	12.9	14.5	J30J02P020P000C00000	23.2	18.8	14.4	14.5
J30J03P030S000C00000	27.3	22.9	17	18.6	J30J03P030P000C00000	27.3	22.9	18.5	18.6
J30J04P040S000C00000	31.4	27	21.1	22.7	J30J04P040P000C00000	31.4	27	22.6	22.7
J30J05P050S000C00000	36.3	30.9	25	26.6	J30J05P050P000C00000	36.3	30.9	26.5	26.6
J30J06P060S000C00000	39.6	35.2	29.3	30.9	J30J06P060P000C00000	39.6	35.2	30.8	30.9
J30J07P070S000C00000	43.7	39.3	33.4	35	J30J07P070P000C00000	43.7	39.3	34.9	35
J30J08P080S000C00000	47.8	43.4	37.5	39.1	J30J08P080P000C00000	47.8	43.4	39	39.1
J30J09P090S000C00000	51.9	47.5	41.6	43.2	J30J09P090P000C00000	51.9	47.5	43.1	43.2
J30J10P100S000C00000	56	51.6	45.7	47.3	J30J10P100P000C00000	56	51.6	47.2	47.3
J30J09P02JSC00C00000	29.7	24.5	18.6	20.2	J30J09P02KPC00C00000	29.7	24.5	20.1	20.2
J30J11P04JSC00C00000	36.3	30.9	25	26.6	J30J11P04KPC00C00000	36.3	30.9	26.5	26.6
J30J21P02JSC00C00000	36.3	30.9	25	26.6	J30J21P02KPC00C00000	36.3	30.9	26.5	26.6
J30J25P02JSC00C00000	36.3	30.9	25	26.6	J30J25P02KPC00C00000	36.3	30.9	26.5	26.6
J30J27P02JSC00C00000	36.3	30.9	25	26.6	J30J27P02KPC00C00000	36.3	30.9	26.5	26.6
J30J39P02JSC00C00000	42.8	37.3	31.4	33	J30J39P02KPC00C00000	42.8	37.3	32.9	33

Solder Termination

.Plug J30J□□P□□□S□□□S00000

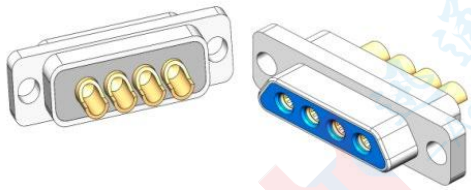

J30J04P040S000S00000

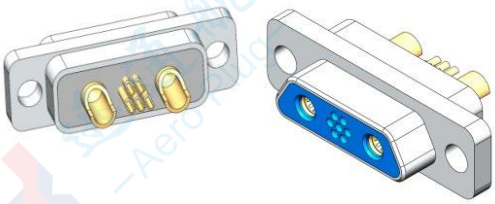

J30J09P02JSS00S000

.Socket J30J□□P□□□P□□□S00000

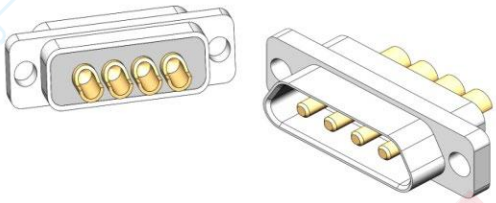

J30J04P040P000S00000

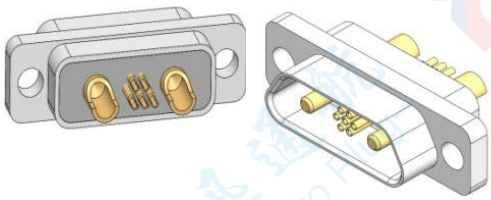

J30J09P02KPS00S00

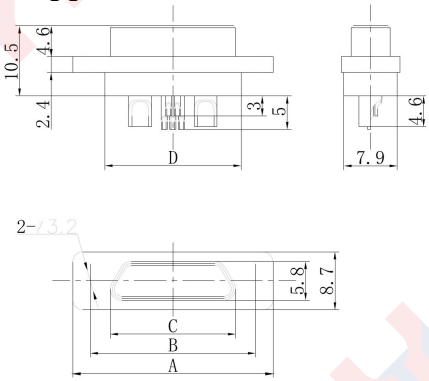

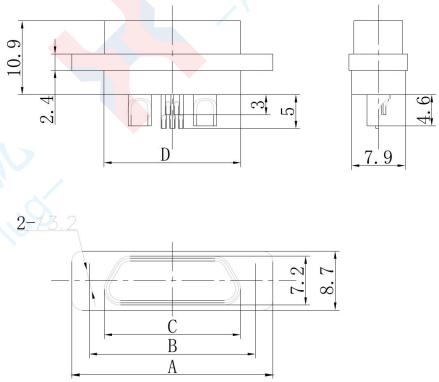

Plug Model	Dimensions				Socket Model	Dimensions			
	A	B	C	D		A	B	C	D
J30J02P020S000S00000	23.2	18.8	12.9	14.5	J30J02P020P000S00000	23.2	18.8	14.4	14.5
J30J03P030S000S00000	27.3	22.9	17	18.6	J30J03P030P000S00000	27.3	22.9	18.5	18.6
J30J04P040S000S00000	31.4	27	21.1	22.7	J30J04P040P000S00000	31.4	27	22.6	22.7
J30J05P050S000S00000	36.3	30.9	25	26.6	J30J05P050P000S00000	36.3	30.9	26.5	26.6
J30J06P060S000S00000	39.6	35.2	29.3	30.9	J30J06P060P000S00000	39.6	35.2	30.8	30.9
J30J07P070S000S00000	43.7	39.3	33.4	35	J30J07P070P000S00000	43.7	39.3	34.9	35
J30J08P080S000S00000	47.8	43.4	37.5	39.1	J30J08P080P000S00000	47.8	43.4	39	39.1
J30J09P090S000S00000	51.9	47.5	41.6	43.2	J30J09P090P000S00000	51.9	47.5	43.1	43.2
J30J10P100S000S00000	56	51.6	45.7	47.3	J30J10P100P000S00000	56	51.6	47.2	47.3
J30J09P02JSS00S00000	29.7	24.5	18.6	20.2	J30J09P02KPS00S00000	29.7	24.5	20.1	20.2
J30J11P04JSS00S00000	36.3	30.9	25	26.6	J30J11P04KPS00S00000	36.3	30.9	26.5	26.6
J30J21P02JSS00S00000	36.3	30.9	25	26.6	J30J21P02KPS00S00000	36.3	30.9	26.5	26.6
J30J25P02JSS00S00000	36.3	30.9	25	26.6	J30J25P02KPS00S00000	36.3	30.9	26.5	26.6
J30J27P02JSS00S00000	36.3	30.9	25	26.6	J30J27P02KPS00S00000	36.3	30.9	26.5	26.6
J30J39P02JSS00S00000	42.8	37.3	31.4	33	J30J39P02KPS00S00000	42.8	37.3	32.9	33

Straight PCB Mount

.Plug J30J□□P□□□S□□□N10000

.Socket J30J□□P□□□P□□□N10000

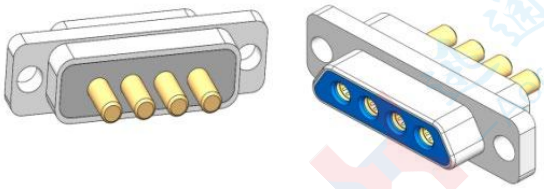

J30J04P040S000N10000

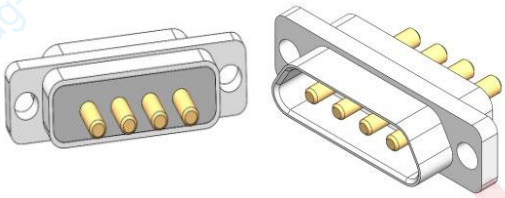

J30J04P040P000N10000

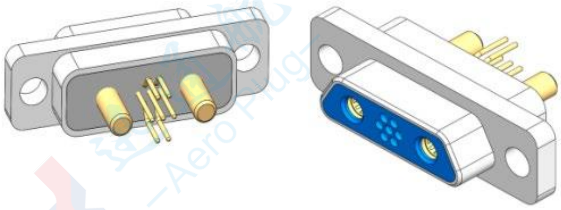

J30J09P02JSN01N10000

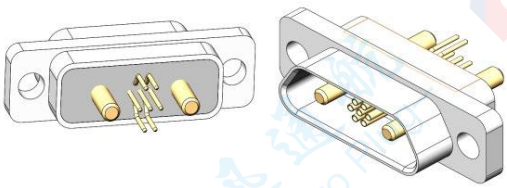

J30J09P02KPN01N10000

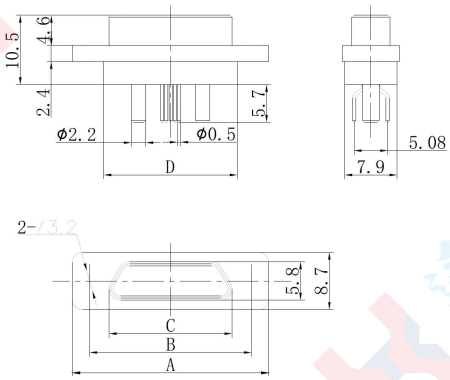

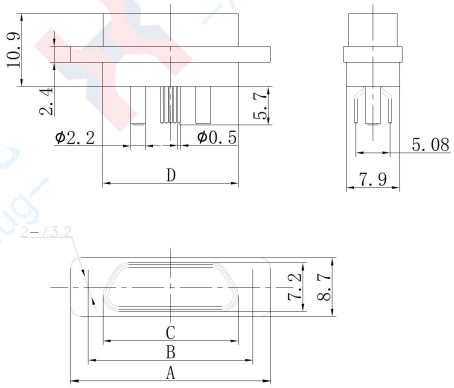

Plug Model	Dimensions				Socket Model	Dimensions			
	A	B	C	D		A	B	C	D
J30J02P020S000N10000	23.2	18.8	12.9	14.5	J30J02P020P000N10000	23.2	18.8	14.4	14.5
J30J03P030S000N10000	27.3	22.9	17	18.6	J30J03P030P000N10000	27.3	22.9	18.5	18.6
J30J04P040S000N10000	31.4	27	21.1	22.7	J30J04P040P000N10000	31.4	27	22.6	22.7
J30J05P050S000N10000	36.3	30.9	25	26.6	J30J05P050P000N10000	36.3	30.9	26.5	26.6
J30J06P060S000N10000	39.6	35.2	29.3	30.9	J30J06P060P000N10000	39.6	35.2	30.8	30.9
J30J07P070S000N10000	43.7	39.3	33.4	35	J30J07P070P000N10000	43.7	39.3	34.9	35
J30J08P080S000N10000	47.8	43.4	37.5	39.1	J30J08P080P000N10000	47.8	43.4	39	39.1
J30J09P090S000N10000	51.9	47.5	41.6	43.2	J30J09P090P000N10000	51.9	47.5	43.1	43.2
J30J10P100S000N10000	56	51.6	45.7	47.3	J30J10P100P000N10000	56	51.6	47.2	47.3
J30J09P02JSN01N10000	29.7	24.5	18.6	20.2	J30J09P02KPN01N10000	29.7	24.5	20.1	20.2
J30J11P04JSN01N10000	36.3	30.9	25	26.6	J30J11P04KPN01N10000	36.3	30.9	26.5	26.6
J30J21P02JSN01N10000	36.3	30.9	25	26.6	J30J21P02KPN01N10000	36.3	30.9	26.5	26.6
J30J25P02JSN01N10000	36.3	30.9	25	26.6	J30J25P02KPN01N10000	36.3	30.9	26.5	26.6
J30J27P02JSN01N10000	36.3	30.9	25	26.6	J30J27P02KPN01N10000	36.3	30.9	26.5	26.6
J30J39P02JSN01N10000	42.8	37.3	31.4	33	J30J39P02KPN01N10000	42.8	37.3	32.9	33

Right-angle PCB Mount

.Plug J30J□□P□□□S□□□W10000

.Socket J30J□□P□□□P□□□W10000

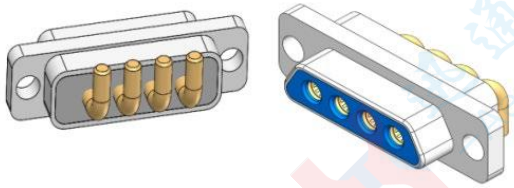

J30J04P040S000W10000

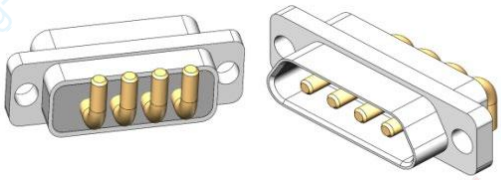

J30J04P040P000W10000

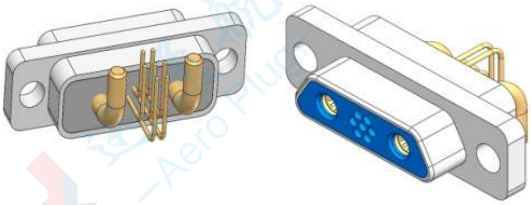

J30J09P02JSW01W10000

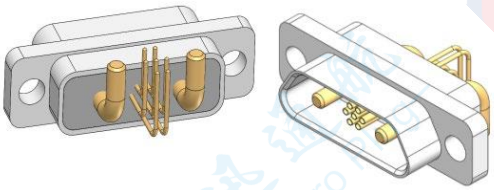

J30J09P02KPW01W10000

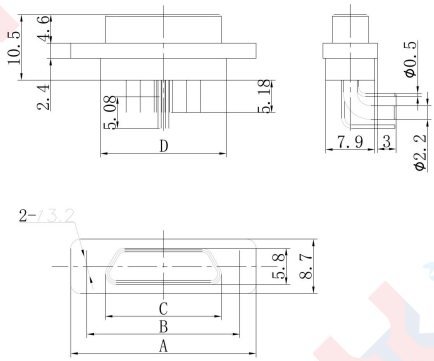

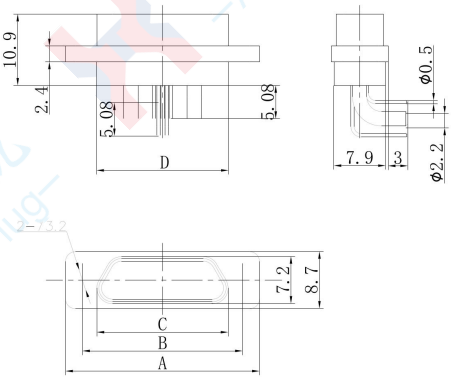

Plug Model	Dimensions				Socket Model	Dimensions			
	A	B	C	D		A	B	C	D
J30J02P020S000W10000	23.2	18.8	12.9	14.5	J30J02P020P000W10000	23.2	18.8	14.4	14.5
J30J03P030S000W10000	27.3	22.9	17	18.6	J30J03P030P000W10000	27.3	22.9	18.5	18.6
J30J04P040S000W10000	31.4	27	21.1	22.7	J30J04P040P000W10000	31.4	27	22.6	22.7
J30J05P050S000W10000	36.3	30.9	25	26.6	J30J05P050P000W10000	36.3	30.9	26.5	26.6
J30J06P060S000W10000	39.6	35.2	29.3	30.9	J30J06P060P000W10000	39.6	35.2	30.8	30.9
J30J07P070S000W10000	43.7	39.3	33.4	35	J30J07P070P000W10000	43.7	39.3	34.9	35
J30J08P080S000W10000	47.8	43.4	37.5	39.1	J30J08P080P000W10000	47.8	43.4	39	39.1
J30J09P090S000W10000	51.9	47.5	41.6	43.2	J30J09P090P000W10000	51.9	47.5	43.1	43.2
J30J10P100S000W10000	56	51.6	45.7	47.3	J30J10P100P000W10000	56	51.6	47.2	47.3
J30J09P02JSW01W10000	29.7	24.5	18.6	20.2	J30J09P02KPW01W10000	29.7	24.5	20.1	20.2
J30J11P04JSW01W10000	36.3	30.9	25	26.6	J30J11P04KPW01W10000	36.3	30.9	26.5	26.6
J30J21P02JSW01W10000	36.3	30.9	25	26.6	J30J21P02KPW01W10000	36.3	30.9	26.5	26.6
J30J25P02JSW01W10000	36.3	30.9	25	26.6	J30J25P02KPW01W10000	36.3	30.9	26.5	26.6
J30J27P02JSW01W10000	36.3	30.9	25	26.6	J30J27P02KPW01W10000	36.3	30.9	26.5	26.6
J30J39P02JSW01W10000	42.8	37.3	31.4	33	J30J39P02KPW01W10000	42.8	37.3	32.9	33

Outline Drawing of Mated Products

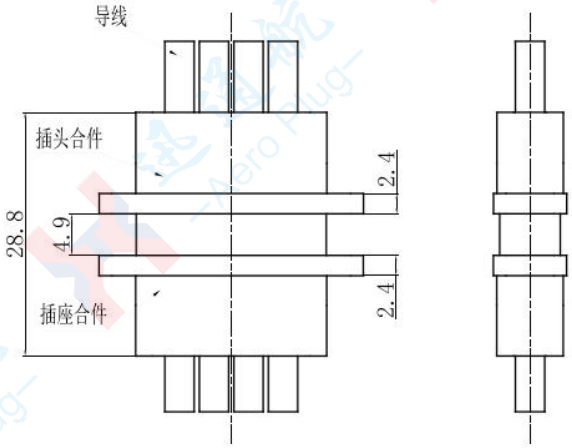

J30J Series High and Low Current Hybrid Rectangular Electrical Connectors \ Locking Accessories

Free-end Locking Accessory

▪J30JL Type Accessories

Assembly Diagram

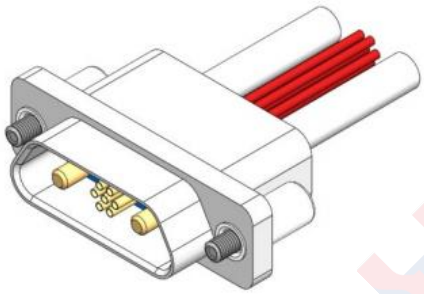

Overall Dimension Drawing

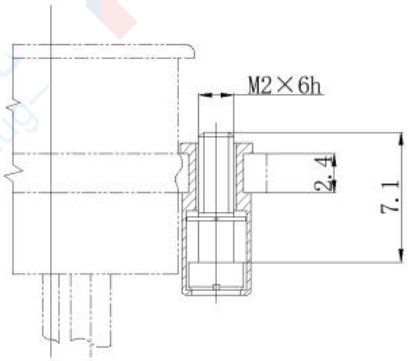

▪J30JP and J30JP8 Type Accessories

Assembly Diagram

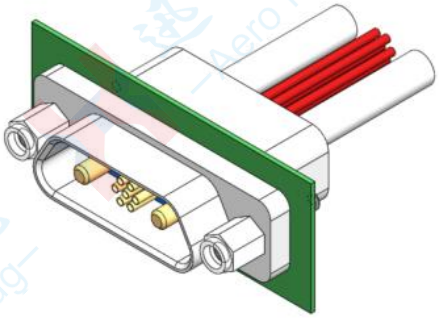

Overall Dimension Drawing

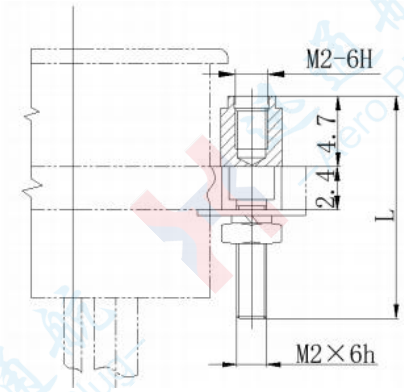

Locking Accessory Code	L
J30JP	12.6
J30JP8	15.6

J30JP5 Type Accessories
Assembly Diagram

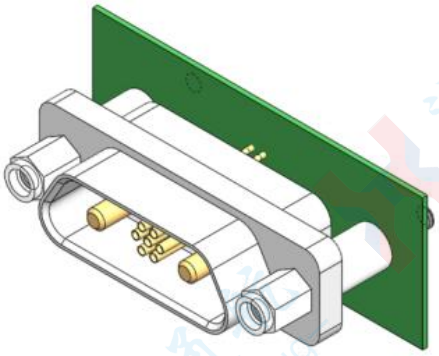

Overall Dimension

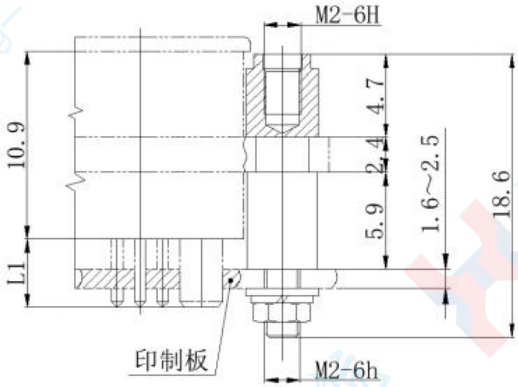

J30JP42 Type Accessories
Assembly Diagram

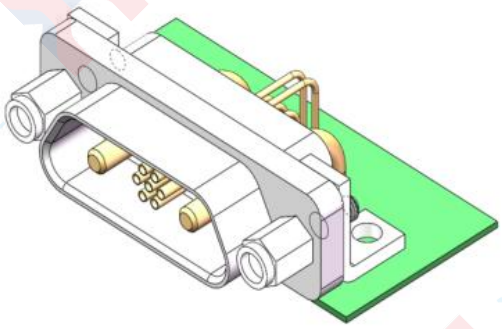

Overall Dimension Drawing

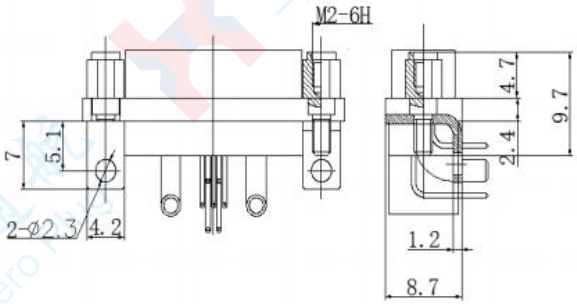

J30JP0, P3, P4, P11, and P45 Type Accessories
Assembly Diagram

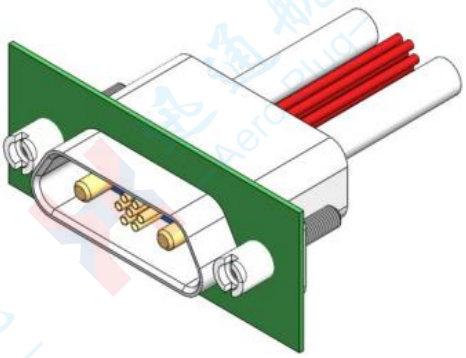

Overall Dimension Drawing

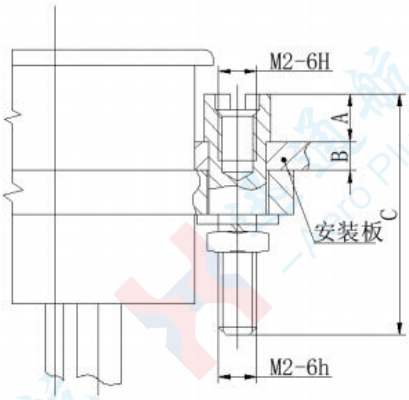

J30J Fixed-end Locking Assembly	A	B	C
J30JP0 Type	4.1	0.6	12.6
J30JP3 Type	3.3	1.4	12.6
J30JP4 Type	2.5	2.2	12.6
J30JP11 Type	1.3	3.4	12.6
J30JP45 Type	2.7	2	20

J30JP33 Type Accessories
Assembly Diagram

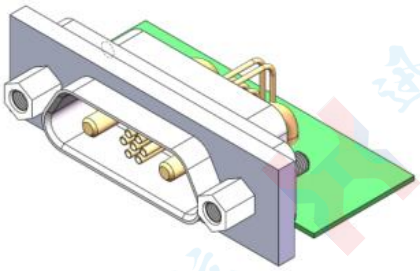

Overall Dimension Drawing

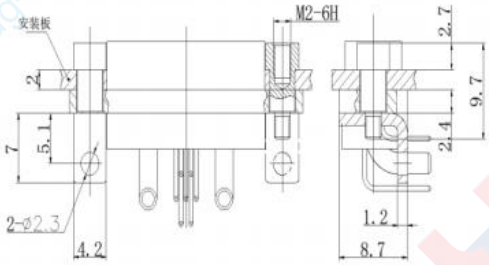

J30JP43 Type Accessories
Assembly Diagram

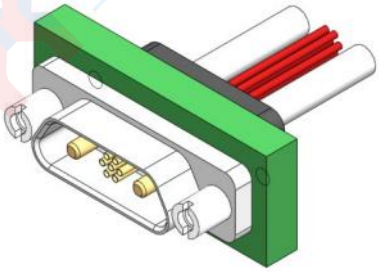

Overall Dimension Drawing

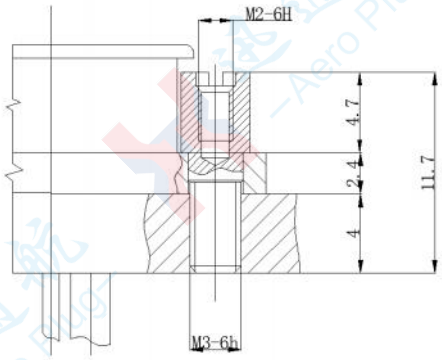

J30J Series Rectangular Electrical Connectors with Mixed Large and Small Current / Mounting Hole Dimensions

Front Panel Mounting Hole Dimensions

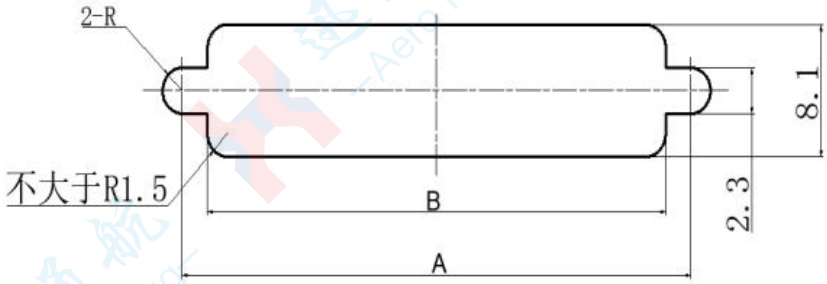

Rear Panel Mounting Hole Dimensions

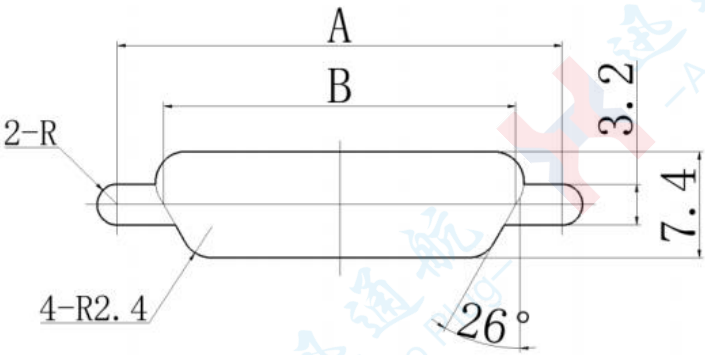

Contact Arrangement	A	B	Contact Arrangement	A	B
02P02	18.8	14.8	10P10	51.6	47.6
03P03	22.9	18.9	09P02	24.5	20.5
04P04	27	23	11P04	30.9	26.9
05P05	30.9	26.9	21P02	30.9	26.9
06P06	35.2	31.2	25P02	30.9	26.9
07P07	39.3	35.3	27P02	30.9	26.9
08P08	43.4	39.4	39P02	37.3	33
09P09	47.5	43.5			

Note: For the J30JP29 type locking accessory, when installed on the front panel, the screw mounting holes on both sides of the mounting plate's opening shall be directly tapped as M3 threaded holes on the mounting plate.

J30J Series Rectangular Electrical Connectors with Mixed High and Low Current Ratings / PCB Mounting Hole Dimensions

Through-Hole PCB Mount

PCB Mounting Hole Dimensions Drawing

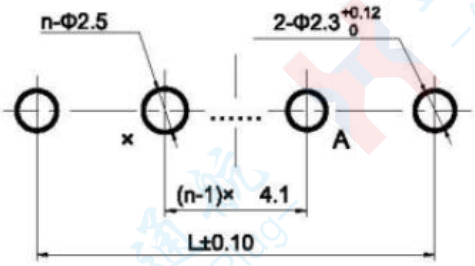

J30J□□P□□0S000N10000

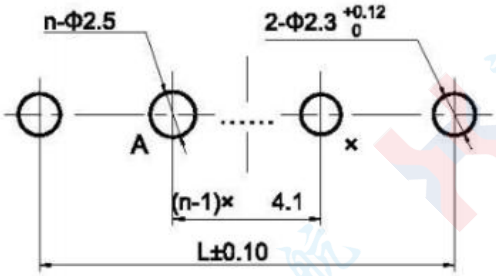

J30J□□P□□0P000N10000

Contact Arrangement	L	n	x	Contact Arrangement	L	n	x
02P02	18.8	2	B	07P07	39.3	7	G
03P03	22.9	3	C	08P08	43.4	8	H
04P04	27	4	D	09P09	47.5	9	I
05P05	30.9	5	E	10P10	51.6	10	J
06P06	35.2	6	F				

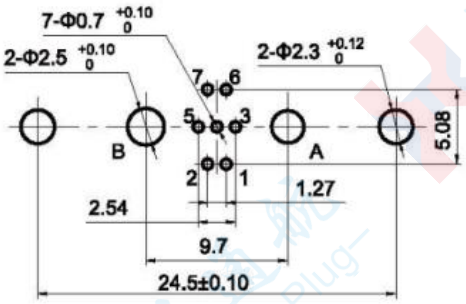

J30J09P02JSN01N10000

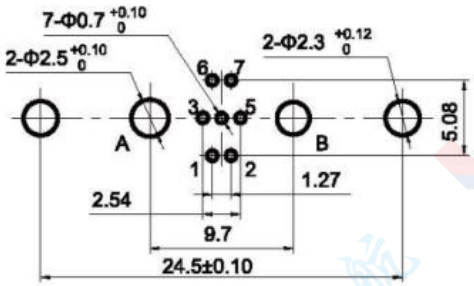

J30J09P02KPN01N10000

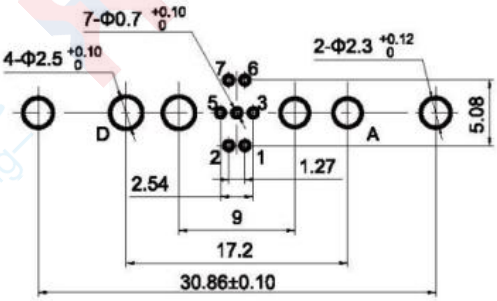

J30J11P04JSN01N10000

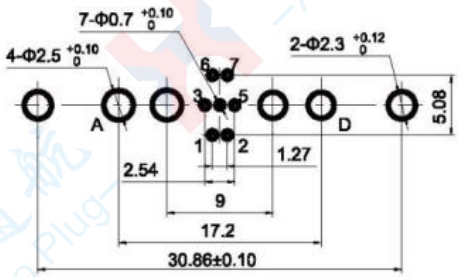

J30J11P04KPN01N10000

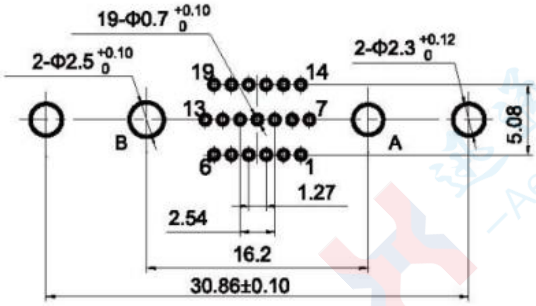

J30J21P02JSN01N10000

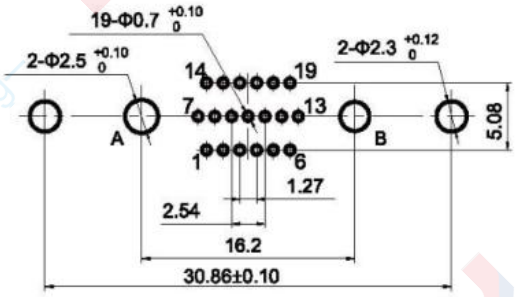

J30J21P02KPN01N10000

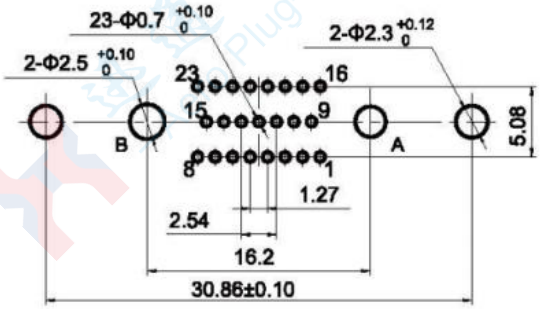

J30J25P02JSN01N10000

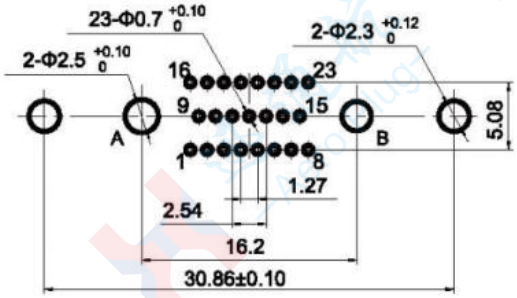

J30J25P02KPN01N10000

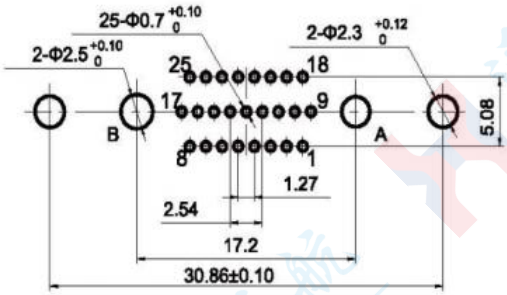

J30J27P02JSN01N10000

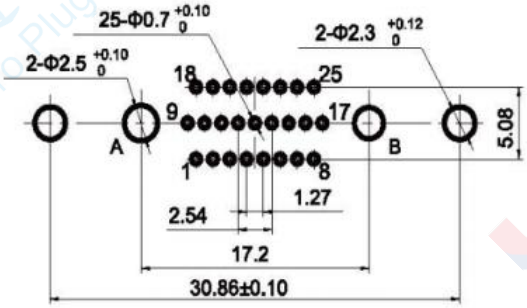

J30J27P02KPN01N10000

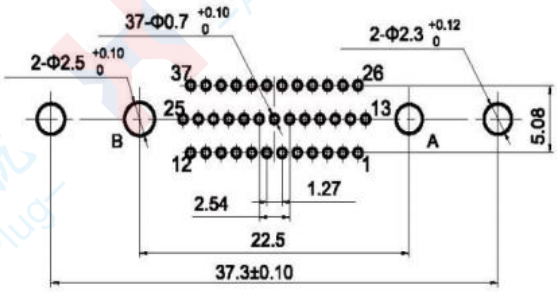

J30J39P02JSN01N10000

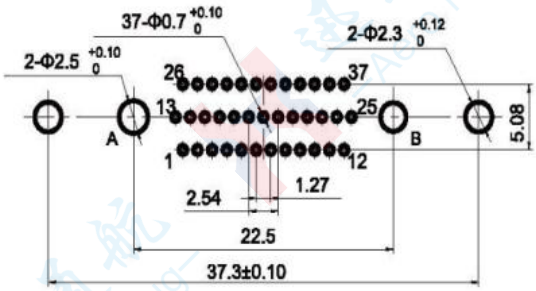

J30J39P02KPN01N10000

J30J Series Rectangular Electrical Connectors with Mixed High and Low Current Ratings/PCB Mounting Hole Dimensions

Right-Angle Through-Hole Mount for Printed Circuit Board

Printed board installation hole size diagram

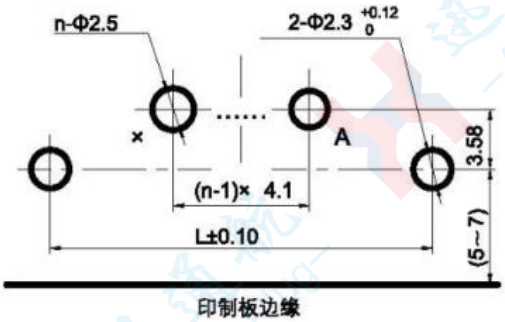

J30J□□P□□0S000W10000

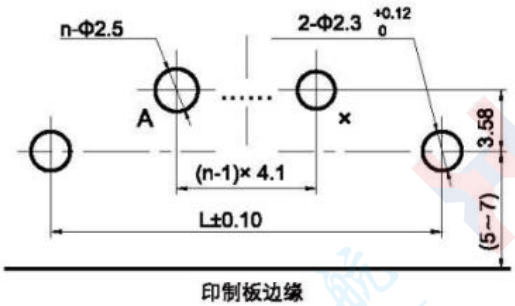

J30J□□P□□0P000W10000

Contact Arrangement	L	n	x	Contact Arrangement	L	n	x
02P02	18.8	2	B	07P07	39.3	7	G
03P03	22.9	3	C	08P08	43.4	8	H
04P04	27	4	D	09P09	47.5	9	I
05P05	30.9	5	E	10P10	51.6	10	J
06P06	35.2	6	F				

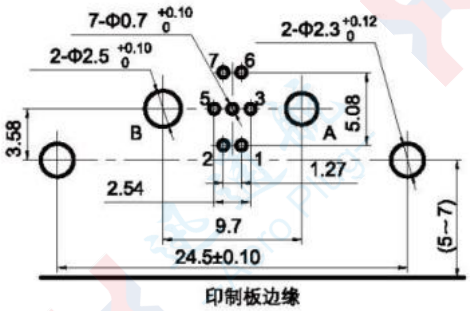

J30J09P02JSW01W10000

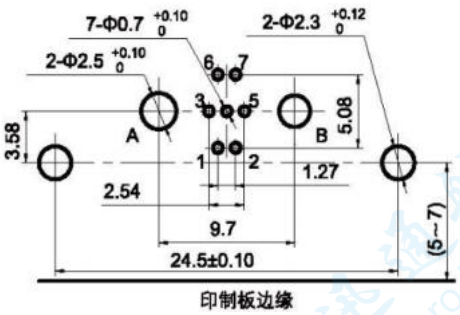

J30J09P02KPW01W10000

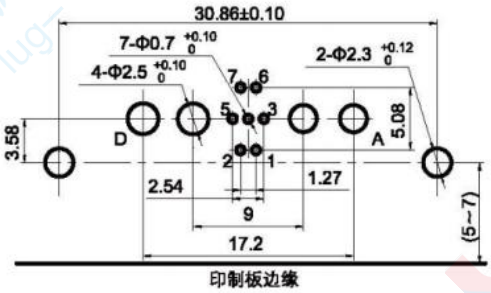

J30J11P04JSW01W10000

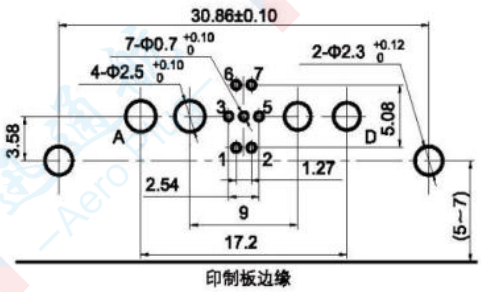

J30J11P04KPW01W10000

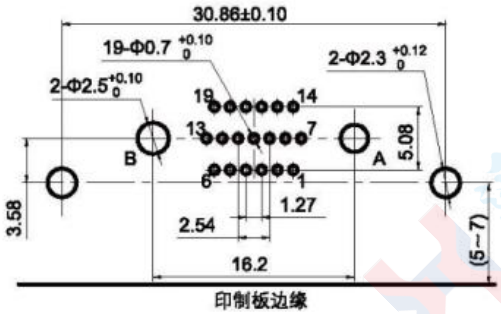

J30J21P02JSW01W10000

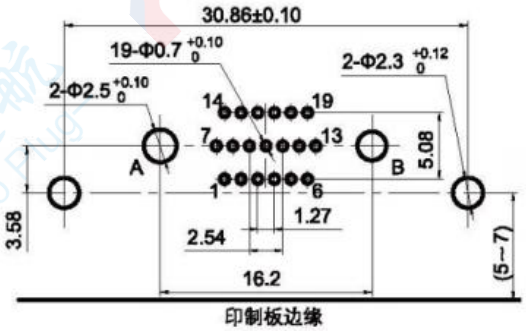

J30J21P02KPW01W10000

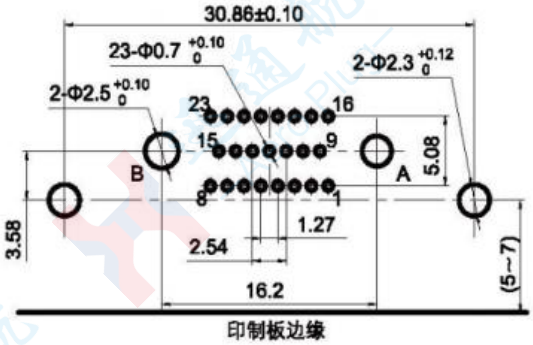

J30J25P02JSW01W10000

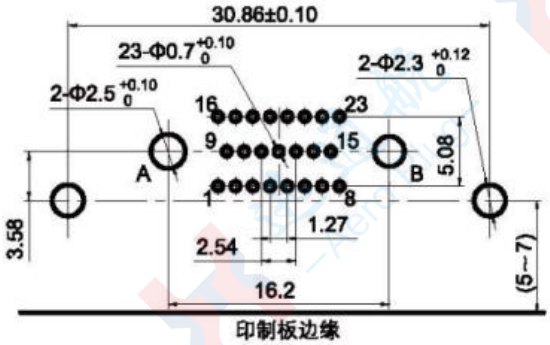

J30J25P02KPW01W10000

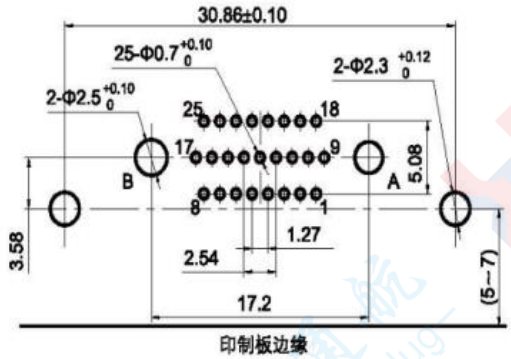

J30J27P02JSW01W10000

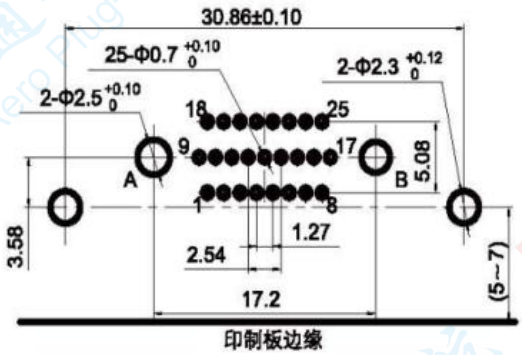

J30J27P02KPW01W10000

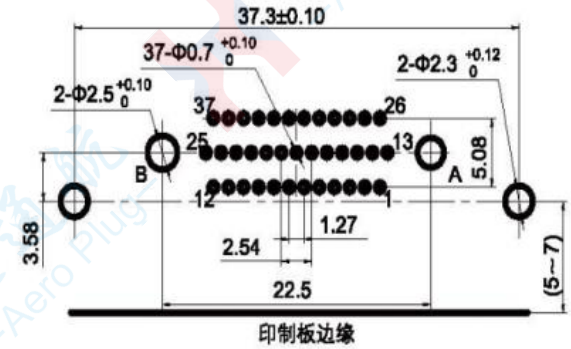

J30J39P02JSW01W10000

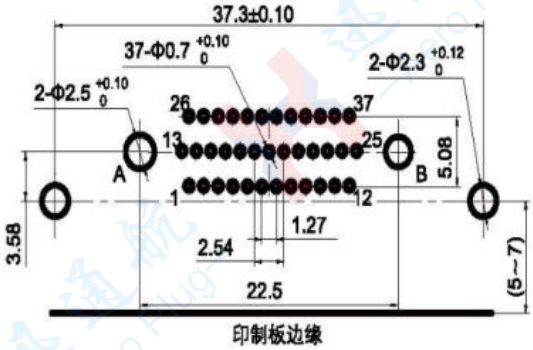

J30J39P02KPW01W10000

J30 Micro-Rectangular Electrical Connector

Product features

- Seven contact configurations are offered: 9, 15, 21, 25, 31, 37, and 51 contacts.
- The plug adopts twisted-wire contacts, with product features including high density, miniaturization, and high reliability.
- Suitable wire cross-sectional area: 0.1 mm² to 0.15 mm²
- Product performance complies with GJB2446 requirements and is equivalent to U.S. Military Standard MIL-DTL-83513.
- Executive Standard: "Detailed Specification for J30 Series Micro-Rectangular Electrical Connectors"

Technical Characteristics

- Ambient Temperature: -55℃ ~ +125℃
- Vibration: 10Hz ~ 2000Hz 196m/s²
- Random Vibration: Power Spectral Density (PSD) 0.4 G²/Hz, Total Acceleration Root Mean Square (RMS) 23.1 G
- Shock: 735m/s² 11ms
- Rated Current: 3A
- Contact Resistance: ≤ 10mΩ
- Insulation Resistance: ≥ 5000MΩ
- Dielectric Withstand Voltage: 800V

Spectrum Arrangement

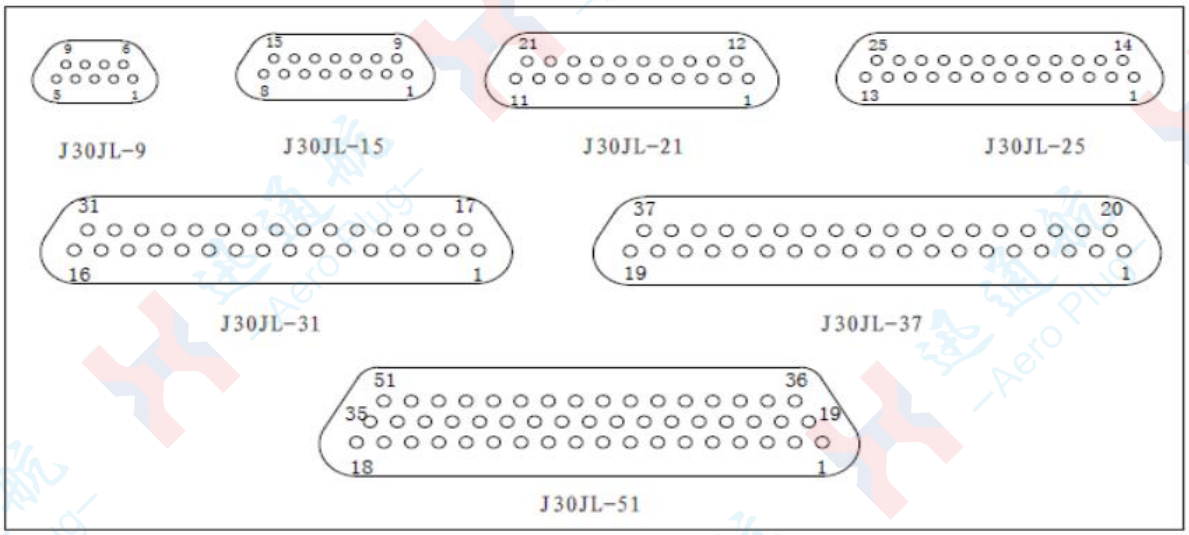

Note: Viewed from the mating end of the plug

Model Nomenclature

J30	X	-	X	TJ/ZK	X	-	X
①	②		③	④	⑤		⑥

①Main Designation： J30

②Three shell types are available: Basic type (no symbol), Type A, and Type B.

③Number of Contacts：9 、15 、21、25、31、37、51

④ Contact Type：TJ - Plug with pins
ZK - Socket with sockets
TJ and ZK are fixed combinations

⑤ Tail end form：No letter: Crimp type
S - Welding
N -Through-Hole PCB Mount
W - Right-angle PCB

⑥ Indicates modification or cable end change：

J - Indicates that the grid spacing of the pins at the cable end of the right-angle PCB connector is changed to 1.27×2.54 (column × row)

Note: Supplementary explanations are not part of the ordering code. When selecting products, customers shall specify the crimped wire specifications in parentheses, including wire cross-sectional area, length, color, etc. For special requirements, please provide the wiring diagram.

Model example

J30-37 TJ W-J

This model indicates a right-angle PCB plug with 37 contacts arranged in a specific configuration, pins as the contact type, and a W-J type cable end.

Product Family Tree

The J30 product family tree can be separately presented as the Plug (Socket) Assembly Family Tree and the Accessory Family Tree, with details as follows:

Accessory Family Tree

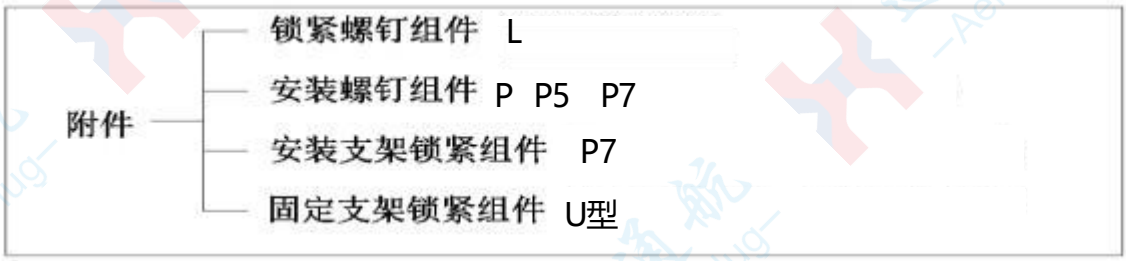

Important Notes for Product Selection

When ordering J30 series products, the required accessories shall generally be specified according to product needs to facilitate product locking or installation. Only the codes of the required accessories need to be provided.

J30 Crimp Basic Type\J30-TJ & J30-ZK

.Plug

.J30-9、15、21、25、31、37、51TJ

Product Stereogram

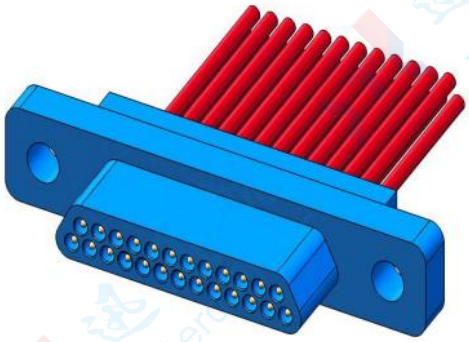

J30-25TJ

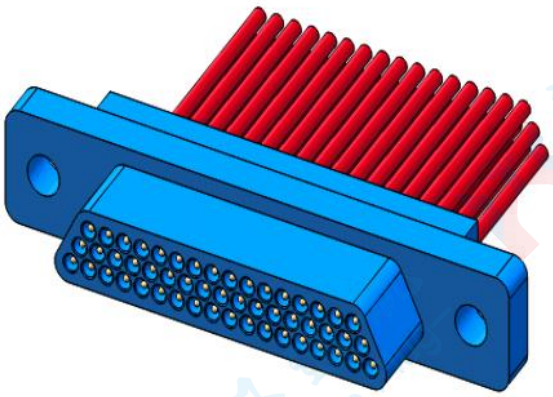

J30-51TJ

.Socket

.J30-9、15、21、25、31、37、51ZK

Product Stereogram

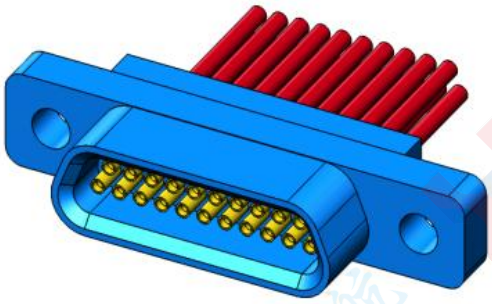

J30-25ZK

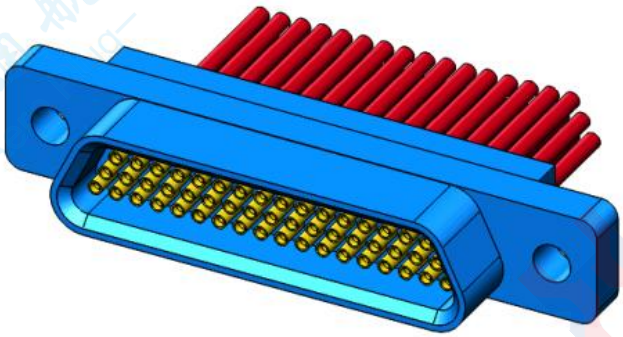

J30-51ZK

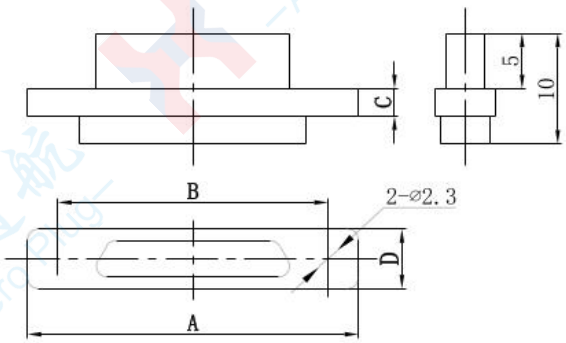

J30-□TJ

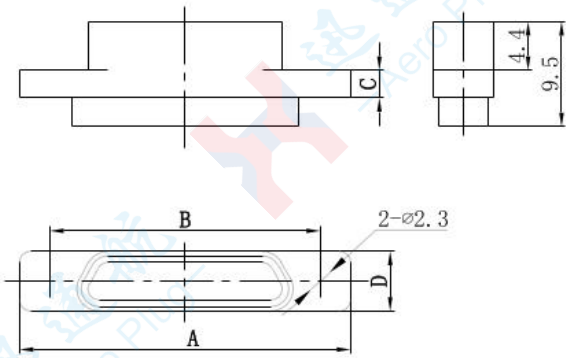

J30-□ZK

Order mark	A	B	C	D
J30-9TJ	19.8	14.3	2.5	5.4
J30-15TJ	23.6	18.2	2.5	5.4
J30-21TJ	27.5	22	2.5	5.4
J30-25TJ	30	24.5	2.5	5.4
J30-31TJ	33.7	28.3	2.5	5.4
J30-37TJ	37.5	32.2	2.5	5.4
J30-51TJ	36.3	30.8	2.3	6.5
J30-9ZK	19.8	14.3	2.5	5.4
J30-15ZK	23.6	18.2	2.5	5.4
J30-21ZK	27.5	22	2.5	5.4
J30-25ZK	30	24.5	2.5	5.4
J30-31ZK	33.7	28.3	2.5	5.4
J30-37ZK	37.5	32.2	2.5	5.4
J30-51ZK	36.3	30.8	2.3	6.5

Outline Drawing of Mated Products

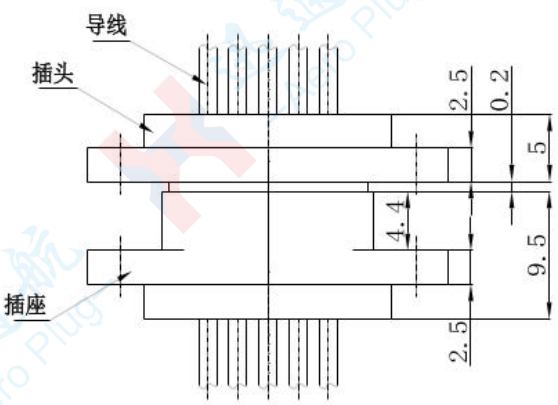

J30-9～37Core

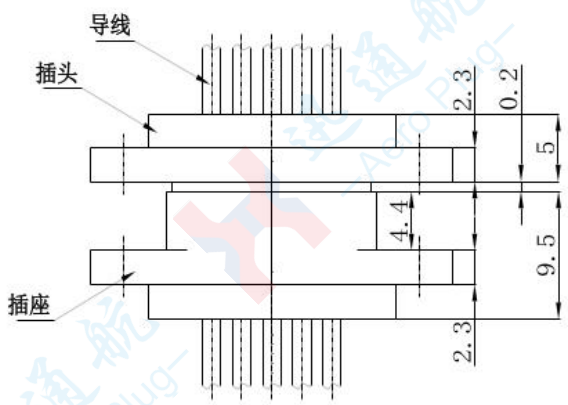

J30-51Core

J30 Through-Hole PCB Basic Type\J30 Straight PCB Type N
The connection method between the cable end of the contacts and the printed circuit board (PCB) is through-hole mounting, with a pitch of 2.54 between adjacent columns. The row spacing is shown in the figure.

.Plug
.J30-9、15、21、25、31、37、51TJN
Product Stereogram

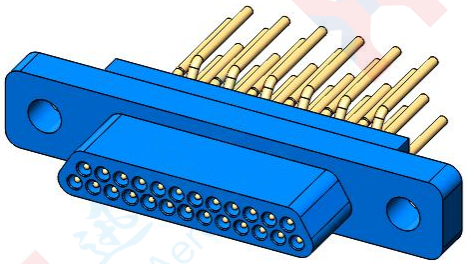

J30-25TJN

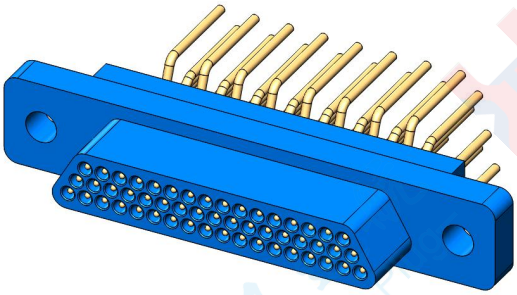

J30-51TJN

.Socket
.J30-9、15、21、25、31、37、51ZKN
Product Stereogram

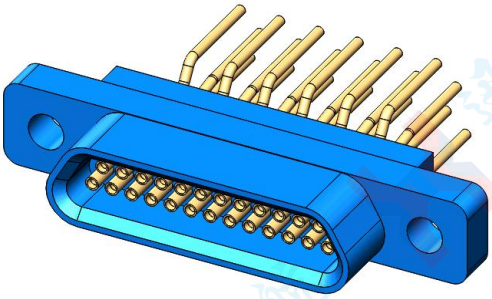

J30-25ZKN

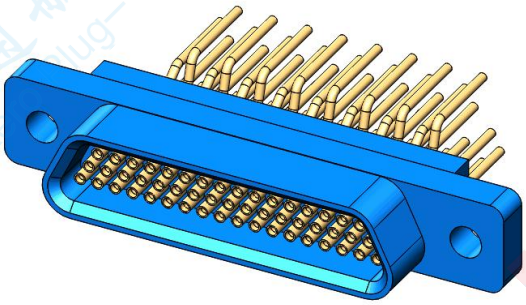

J30-51ZKN

Product Overall Dimensions

Product Overall Dimensions

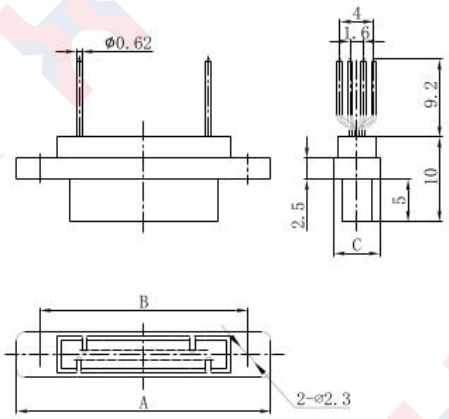

J30-9～37TJN

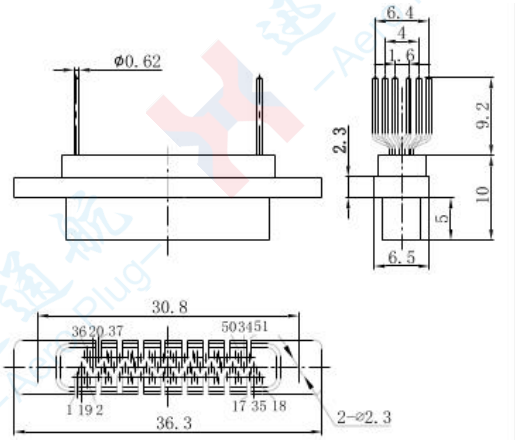

J30-51TJN

Product Overall Dimensions

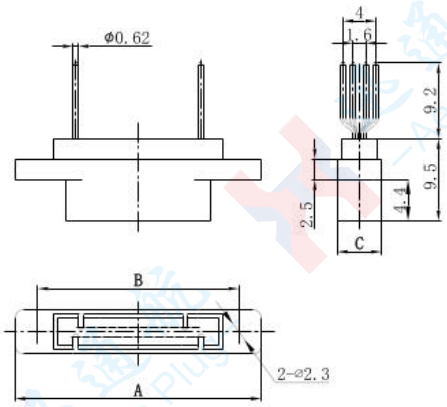

J30-9～37ZKN

Product Overall Dimensions

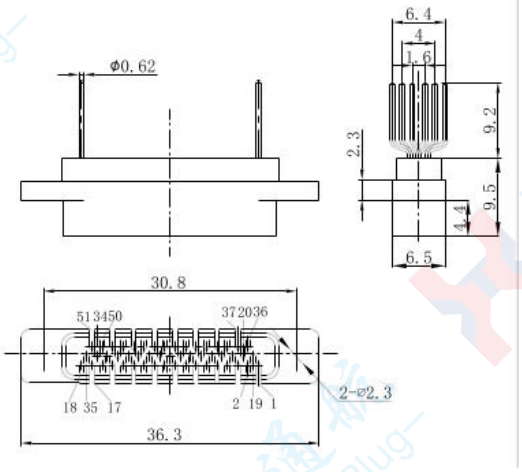

J30-51ZKN

J30-TJN&J30-ZKN

Order mark	A	B	C
J30-9TJN	19.8	14.3	5.4
J30-15TJN	23.6	18.2	5.4
J30-21TJN	27.5	22	5.4
J30-25TJN	30	24.5	5.4
J30-31TJN	33.7	28.3	5.4
J30-37TJN	37.5	32.2	5.4
J30-9ZKN	19.8	14.3	5.4
J30-15ZKN	23.6	18.2	5.4
J30-21ZKN	27.5	22	5.4
J30-25ZKN	30	24.5	5.4
J30-31ZKN	33.7	28.3	5.4
J30-37ZKN	37.5	32.2	5.4

J30 Through-Hole PCB Basic Type\J30 Straight PCB Type N1
The connection method between the cable end of the contacts and the printed circuit board (PCB) is through-hole mounting, with a grid size of 2.54×2.54 (column × row).

.Plug

.J30-9、15、21、25、31、37、51TJN1

Product Stereogram

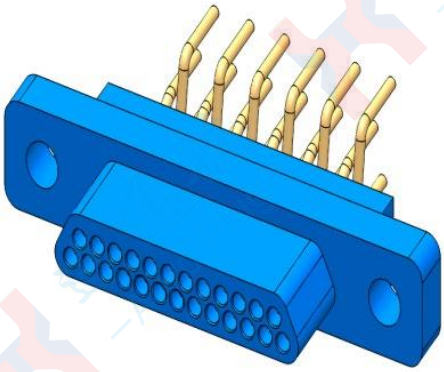

J30-25TJN1

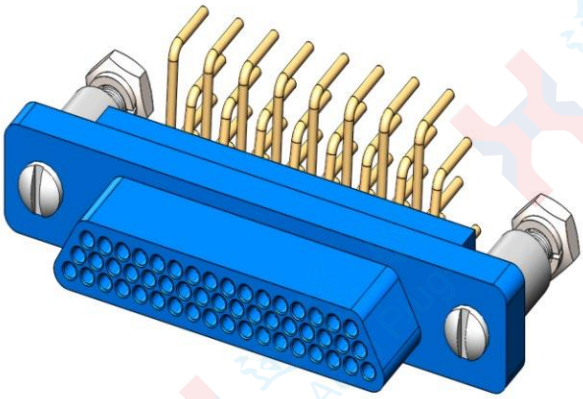

J30-51TJN1

.J30-9、15、21、25、31、37、51ZKN1

Product Stereogram

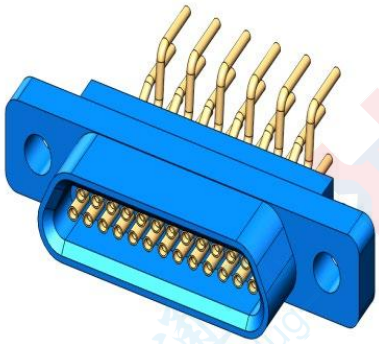

J30-25ZKN1

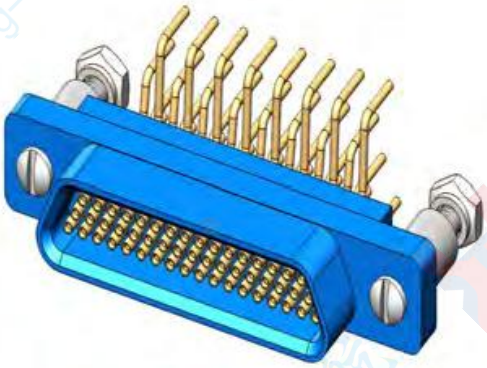

J30-51ZKN1

Product Overall Dimensions

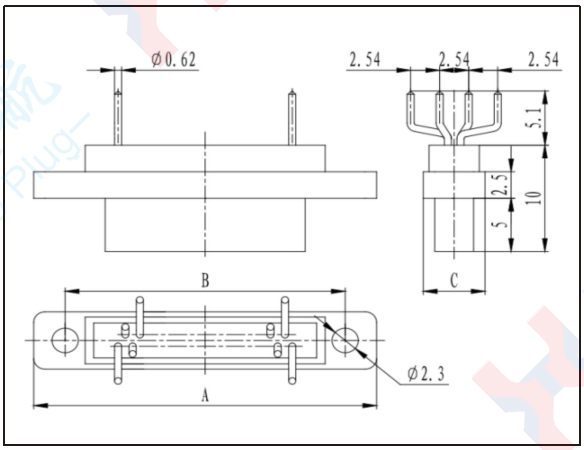

J30-9～37TJN1

Product Overall Dimensions

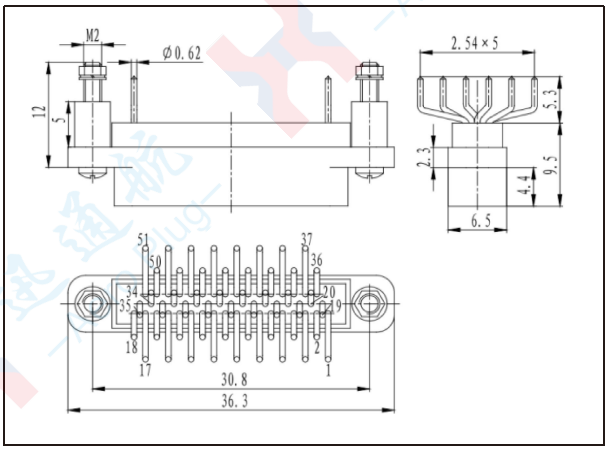

J30-51TJN1

Product Overall Dimensions

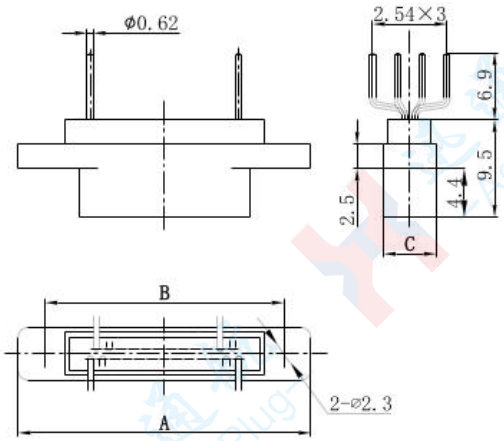

J30-9 ~ 37ZKN1

Product Overall Dimensions

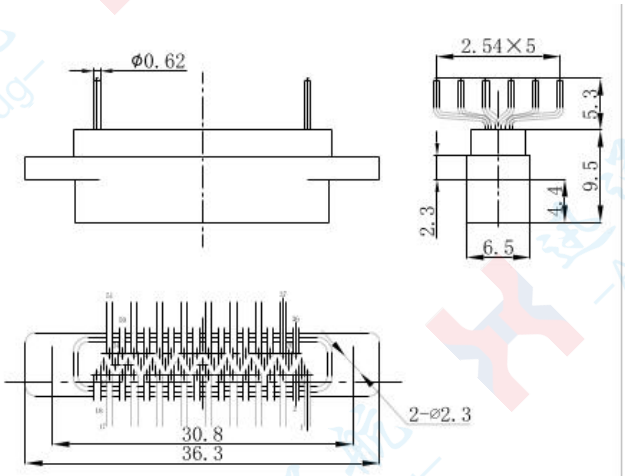

J30-51ZKN1

J30-TJN1&J30-ZKN1

Order mark	A	B	C
J30-9TJN1	19.8	14.3	5.4
J30-15TJN1	23.6	18.2	5.4
J30-21TJN1	27.5	22	5.4
J30-25TJN1	30	24.5	5.4
J30-31TJN1	33.7	28.3	5.4
J30-37TJN1	37.5	32.2	5.4
J30-9ZKN1	19.8	14.3	5.4
J30-15ZKN1	23.6	18.2	5.4
J30-21ZKN1	27.5	22	5.4
J30-25ZKN1	30	24.5	5.4
J30-31ZKN1	33.7	28.3	5.4
J30-37ZKN1	37.5	32.2	5.4

J30 Through-Hole PCB Basic Type\J30 Right-Angle PCB Type W
The connection method between the cable end of the contacts and the printed circuit board (PCB) is right-angle mounting, with a grid size of 2.54×2.54 (column × row).

.Plug

.J30-9、15、21、25、31、37、51TJW

Product Stereogram

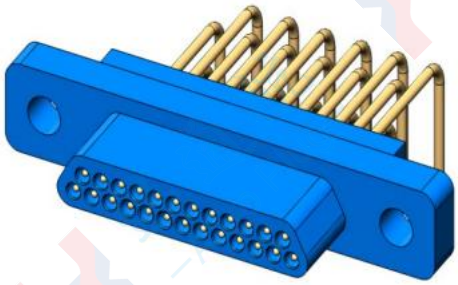

J30-25TJW

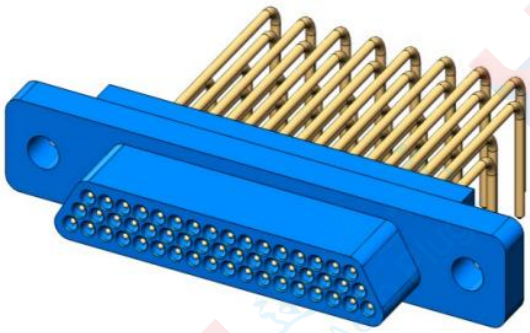

J30-51TJW

Socket

.J30-9、15、21、25、31、37、51ZKW

Product Stereogram

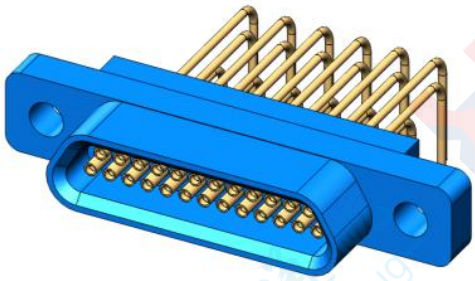

J30-25ZKW

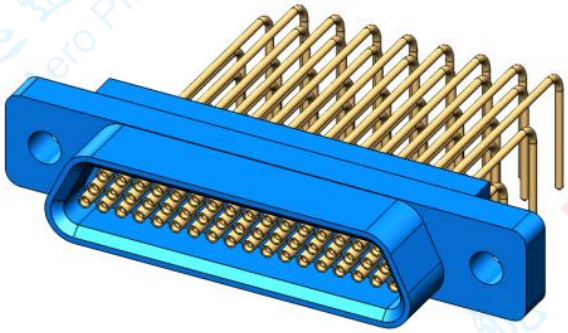

J30-51ZKW

Product Overall Dimensions

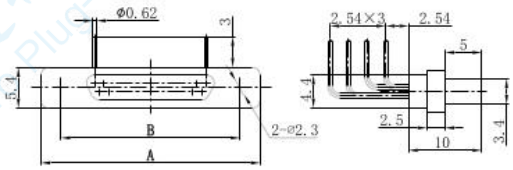

J30-9～37TJW

Product Overall Dimensions

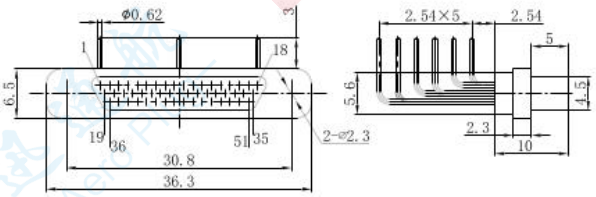

J30-51TJW

Product Overall Dimensions

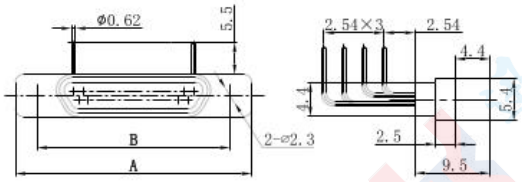

J30-9～37ZKW

Product Overall Dimensions

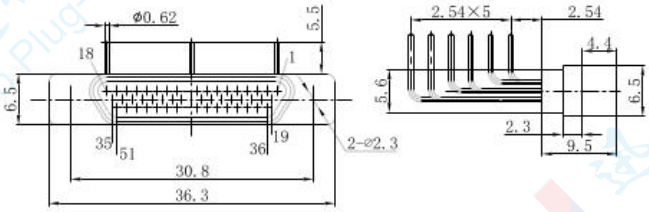

J30-51ZKW

Order mark	A	B	Order mark	A	B
J30-9TJW	19.8	14.3	J30-9ZKW	19.8	14.3
J30-15TJW	23.6	18.2	J30-15ZKW	23.6	18.2
J30-21TJW	27.5	22.0	J30-21ZKW	27.5	22.0
J30-25TJW	30.0	24.5	J30-25ZKW	30.0	24.5
J30-31TJW	33.7	28.3	J30-31ZKW	33.7	28.3
J30-37TJW	37.5	32.2	J30-37ZKW	37.5	32.2

J30 Through-Hole PCB Basic Type\J30 Right-Angle PCB Type W-J
The connection method between the cable end of the contacts and the printed circuit board (PCB) is right-angle mounting, with a grid size of 1.27×2.54 (column × row).

.Plug

.J30-9、15、21、25、31、37、51TJW-J

Product Stereogram

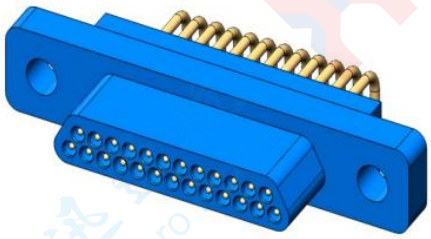

J30-25TJW-J

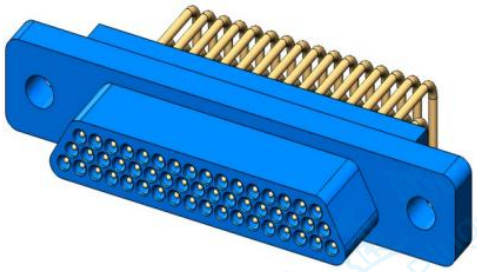

J30-51TJW-J

.Socket

.J30-9、15、21、25、31、37、51ZKW-J

Product Stereogram

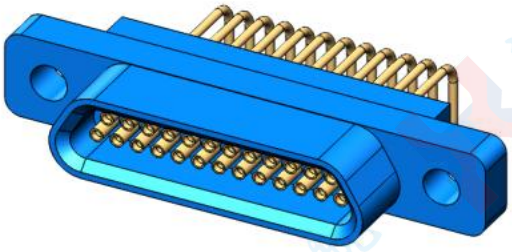

J30-25ZKW-J

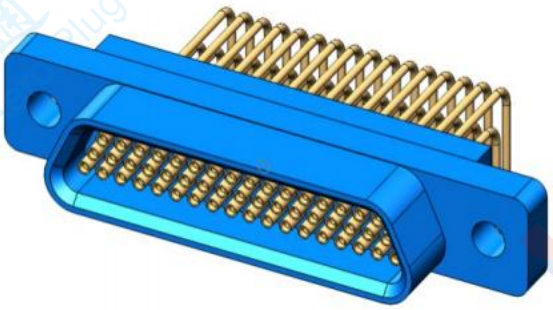

J30-51ZKW-J

Product Overall Dimensions

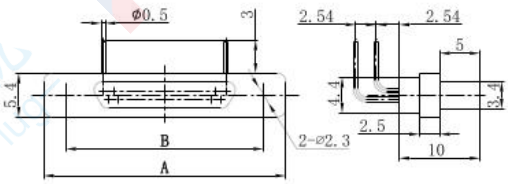

J30-9～37TJW-J

Product Overall Dimensions

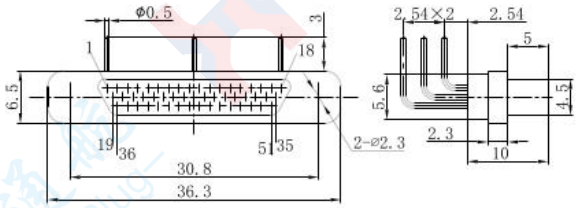

J30-51TJW-J

Product Overall Dimensions

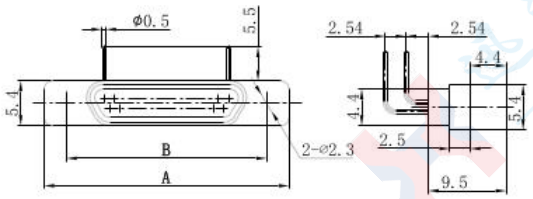

J30-9～37ZKW-J

Product Overall Dimensions

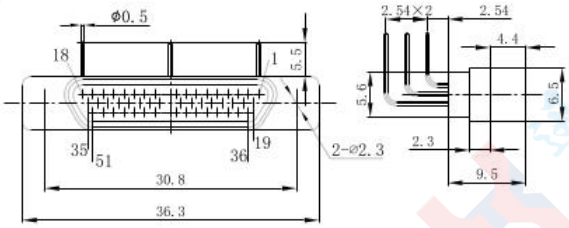

J30-51ZKW-J

Order mark	A	B	Order mark	A	B
J30J-9TJW-J	19.8	14.3	J30J-9ZKW-J	19.8	14.3
J30J-15TJW-J	23.6	18.2	J30J-15ZKW-J	23.6	18.2
J30J-21TJW-J	27.5	22.0	J30J-21ZKW-J	27.5	22.0
J30J-25TJW-J	30.0	24.5	J30J-25ZKW-J	30.0	24.5
J30J-31TJW-J	33.7	28.3	J30J-31ZKW-J	33.7	28.3
J30J-37TJW-J	37.5	32.2	J30J-37ZKW-J	37.5	32.2

J30 Accessories

. J30 series accessories are available in multiple configurations to meet product installation and locking requirements, and customers can order them separately as needed.

.According to different application purposes, J30 accessories are divided into two types:Locking Assemblies and Mounting Assemblies.

.Locking Assemblies are generally used when reliable locking is required for product mating.

They are usually installed on the free end of cable connectors and applicable to basic crimp series products.

. Mounting Assemblies are used to fix products to mounting panels. They are typically installed on the fixed end of cable connectors and in PCB-mount series products.

. L-Type Locking Screw Assembly

Product Stereogram

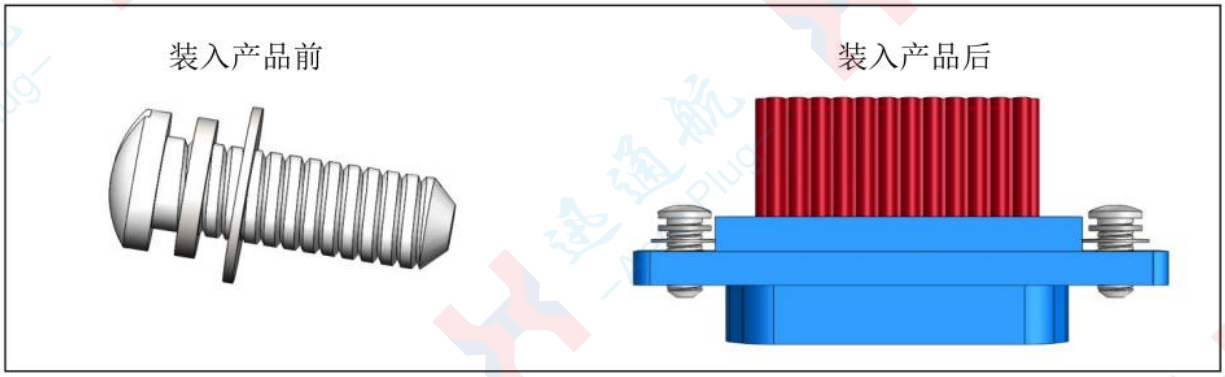

. Applicable Configurations for L-Type Locking Screw Assembly

Order mark	Main features of the screw assembly	Mating Components
L	This locking screw assembly is fully composed of standard components (screw specification: M2×6)	TypeP、TypeP5、TypeP7

.Type P Mounting Screw Assembly

Product Stereogram

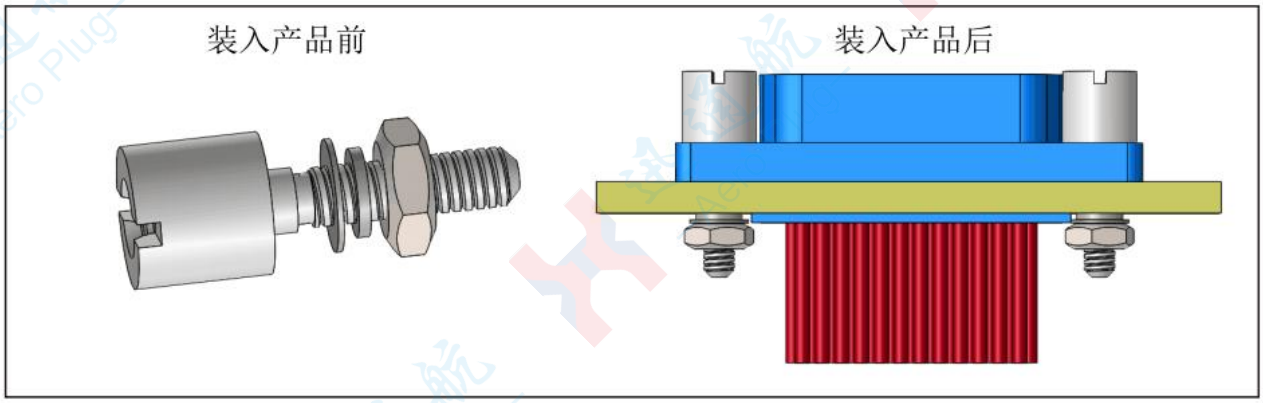

Product Overall Dimensions

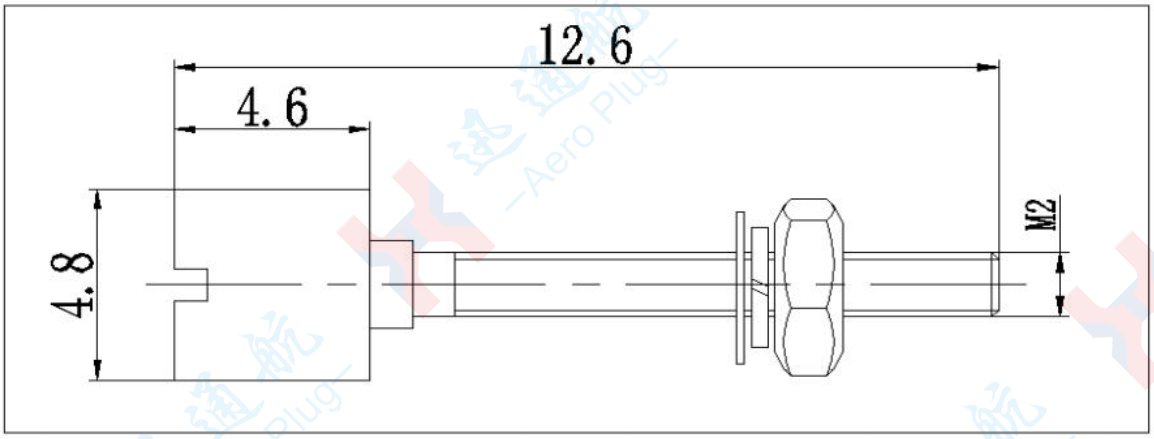

. Applicable Configurations for Type P Mounting Screw Assembly

Order mark	Key Features of the Screw Assembly	Mating Components
P	This is applicable to products for front-panel mounting.	L-Type

. Type P5 Mounting Screw Assembly

Product Stereogram

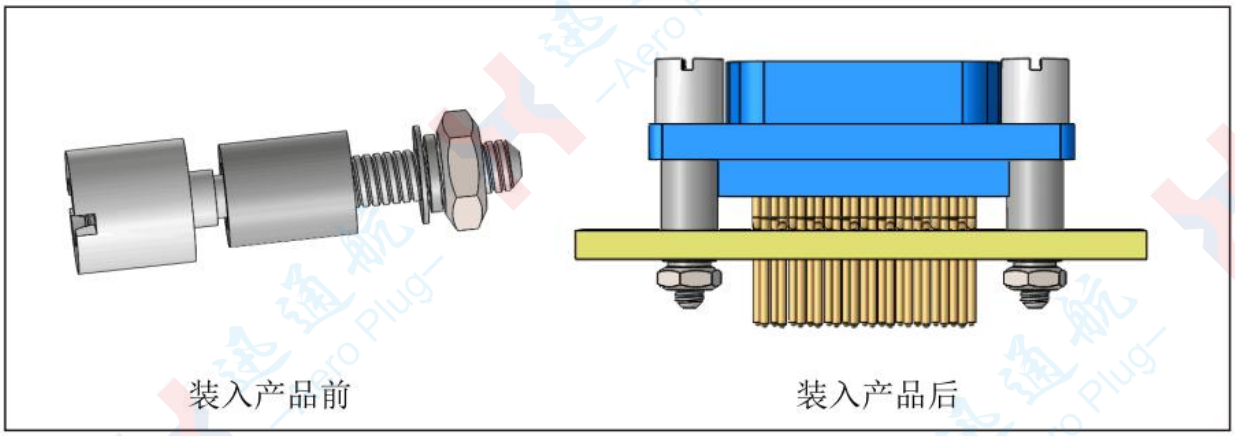

Product Overall Dimensions

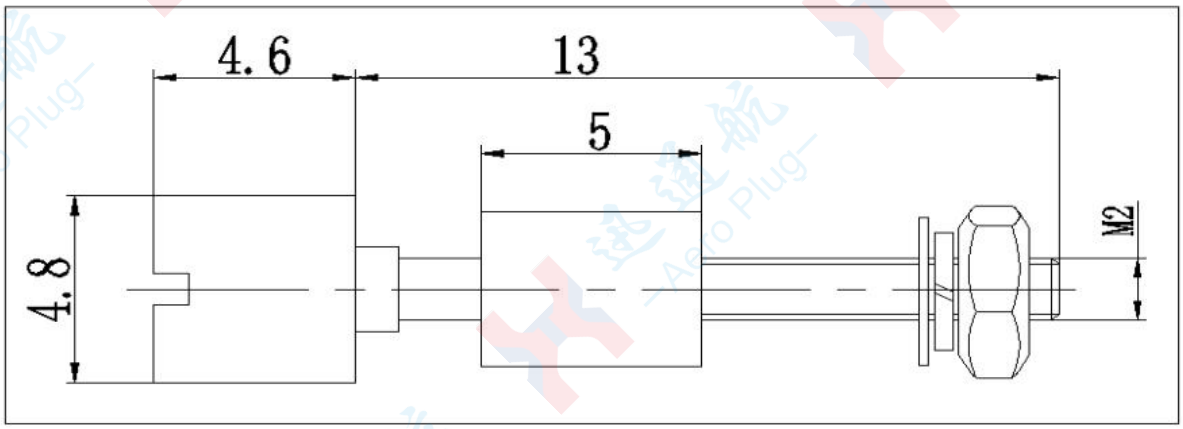

.Applicable Configurations for Type P5 Mounting Screw Assembly

Order mark	Key Features of the Screw Assembly	Mating Components
P5	Applicable to products for straight PCB front-panel mounting, with a board thickness not exceeding 2.5mm.	L-Type

.P7 and P42 Mounting Bracket Locking Assemblies

Product Stereogram

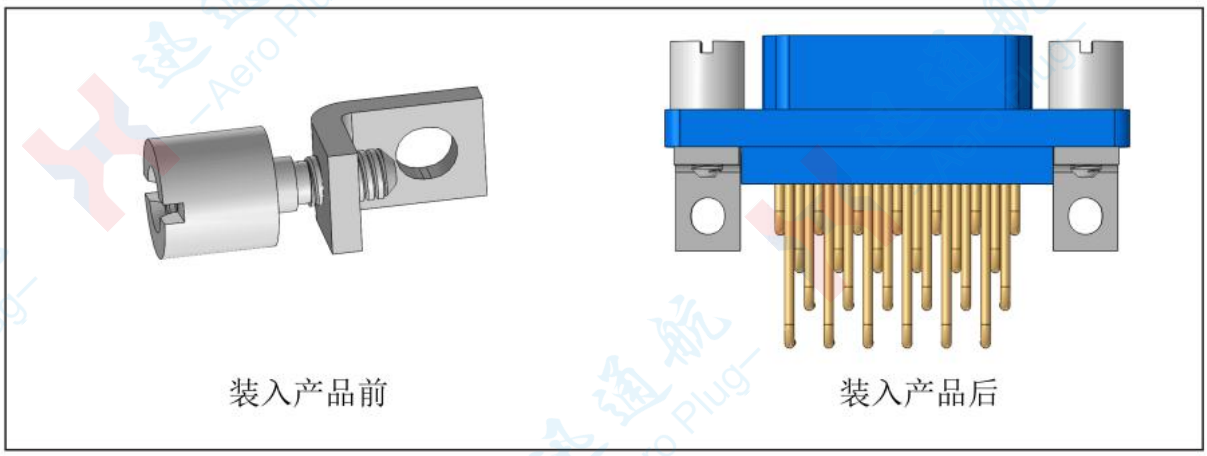

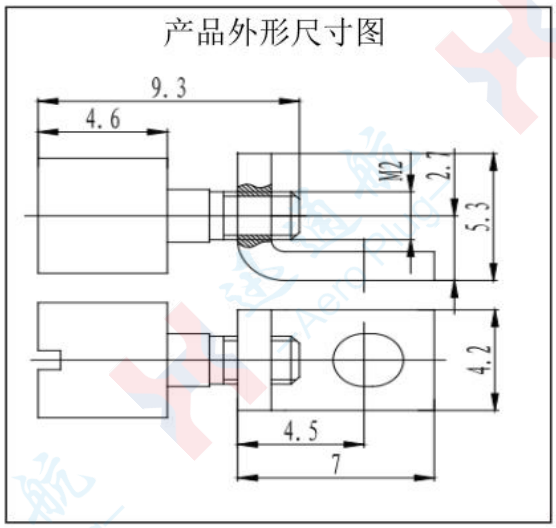

P7

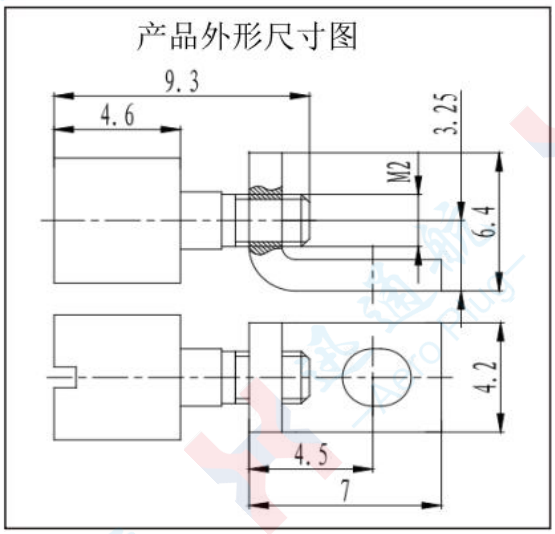

P42

Applicable Configurations for P7 and P42 Mounting Screw Assemblies

Order mark	Key Features of the Screw Assembly	Mating Components
P7	J30-9、15、21、25、31、37TJW/TJW-J/ZKW/ZKW-J	L-Type
P42	J30-51TJW/TJW-J/ZKW/ZKW-J	L-Type

Product Stereogram

. U1 and U2 Fixing Bracket Locking Assemblies

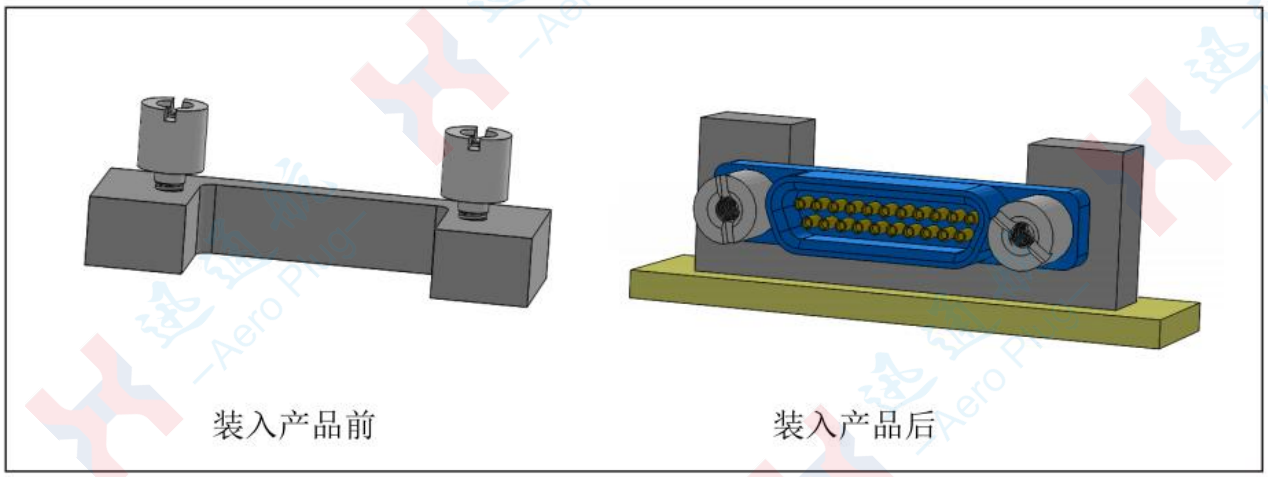

Product Overall Dimensions

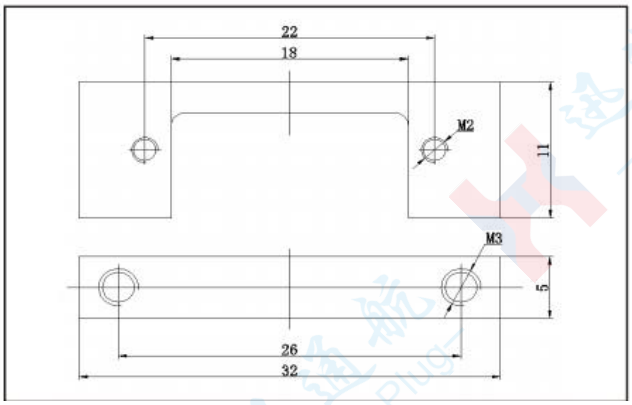

U1

Product Overall Dimensions

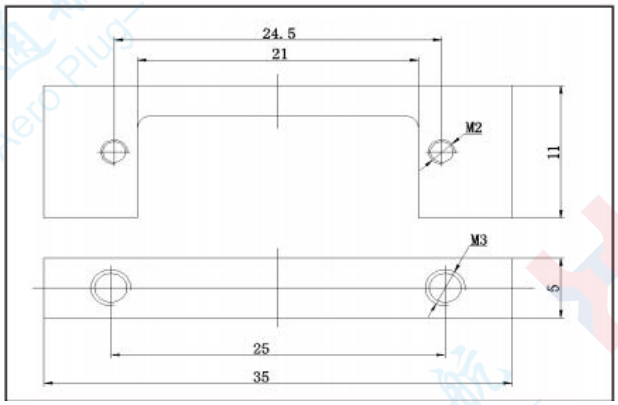

U2

Special Note:

The above fixing bracket locking assemblies already include the L-type Locking Screw Assembly.

Applicable Configurations for U1 and U2 Fixing Bracket Locking Assemblies

Order mark	Scope of Application
U1	J30-21TJ/ZK
U2	J30-25TJ/ZK

Mounting Hole Dimensions of the J30 Series Products

Mounting Plate Hole Dimensions for Front - Panel Mounting of J30 Crimp

Front-Panel Mounting Plate Hole Dimension Drawing for Crimp Series

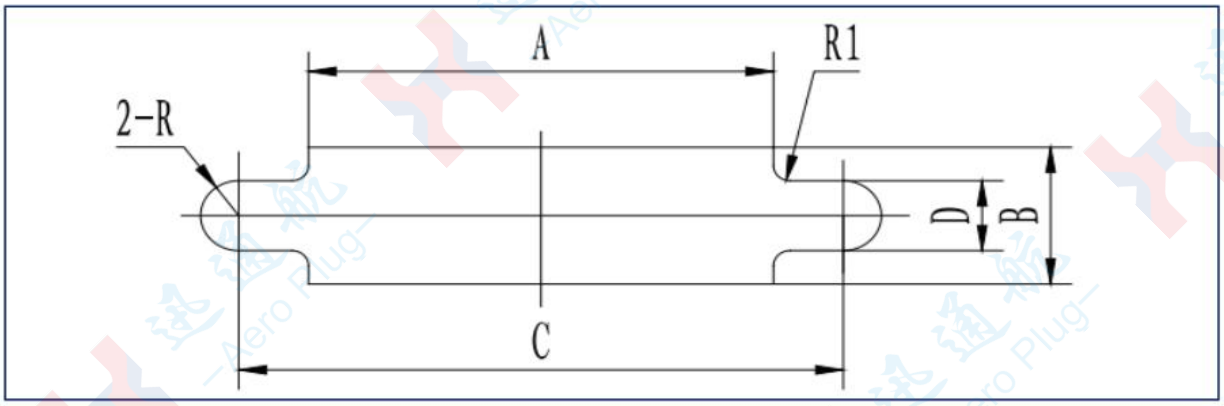

Series Spectru	A	B	C	D
9-Core	10.1	4.6	14.3	2.3
15-Core	14.2	4.6	18.2	2.3
21-Core	17.9	4.6	22	2.3
25-Core	20.8	4.6	24.5	2.3
31-Core	24.2	4.6	28.3	2.3
37-Core	28.2	4.6	32.2	2.3
51-Core	26.9	5.9	30.8	2.3

PCB Hole Dimensions for J30 Series Products
J30—□TJN/□ZKN

. J30-9TJN

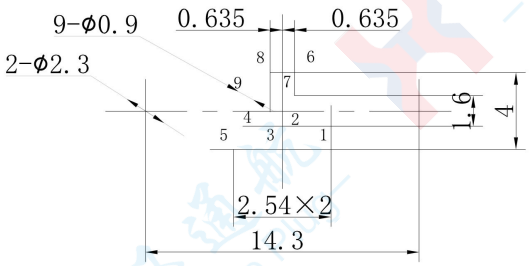

. J30-9ZKN

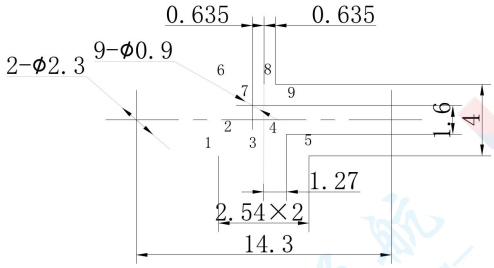

.J30-15TJN

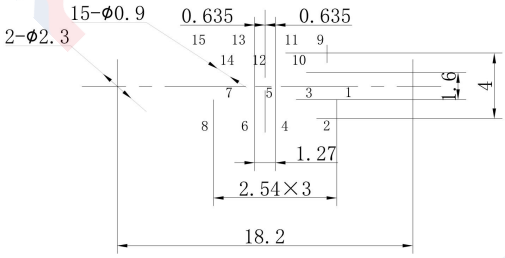

.J30-15ZKN

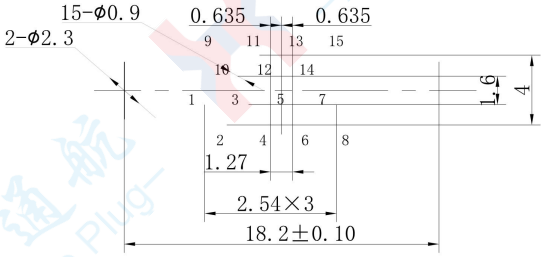

.J30-21TJN

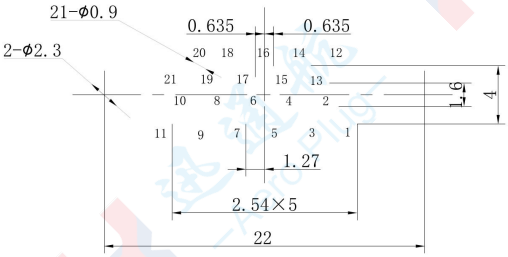

.J30-21ZKN

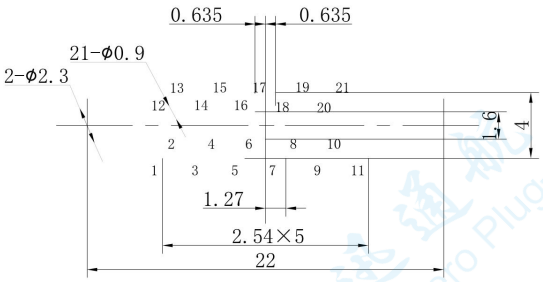

.J30-25TJN

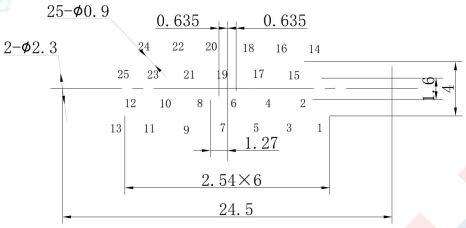

.J30-25ZKN

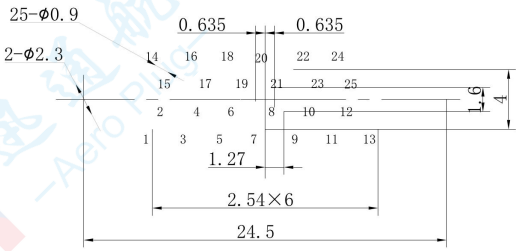

.J30-31TJN

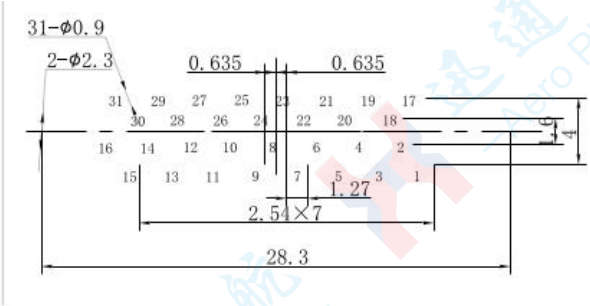

.J30-31ZKN

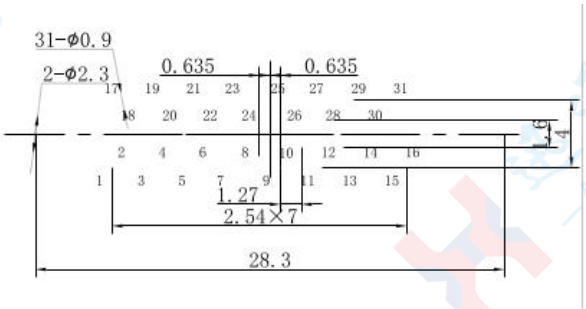

.J30-37TJN

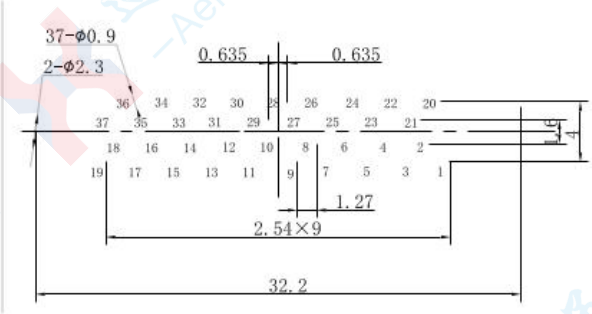

.J30-37ZKN

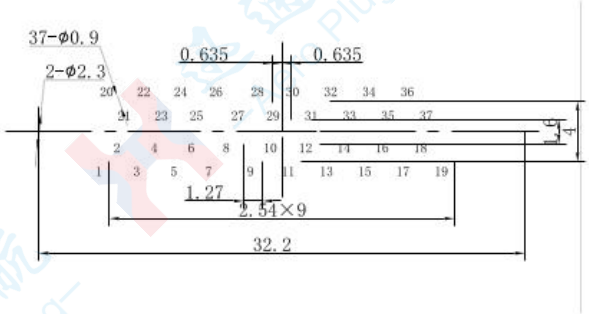

.J30-51TJN

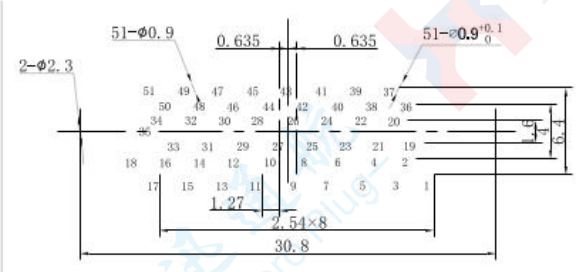

.J30-51ZKN

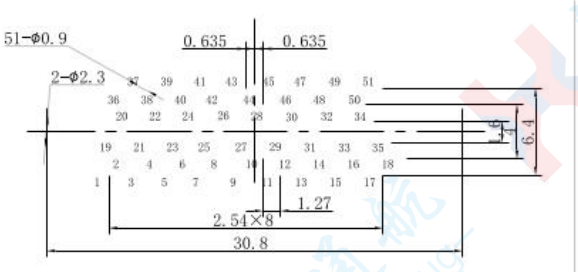

J30—□TJN1/□ZKN1 (Grid Spacing: 2.54×2.54)

.J30-9TJN1

.J30-9ZKN1

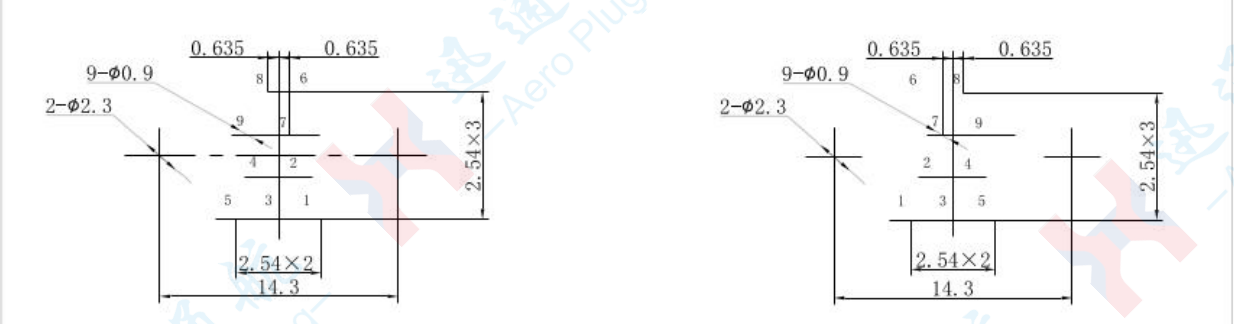

.J30-15TJN1

.J30-15ZKN1

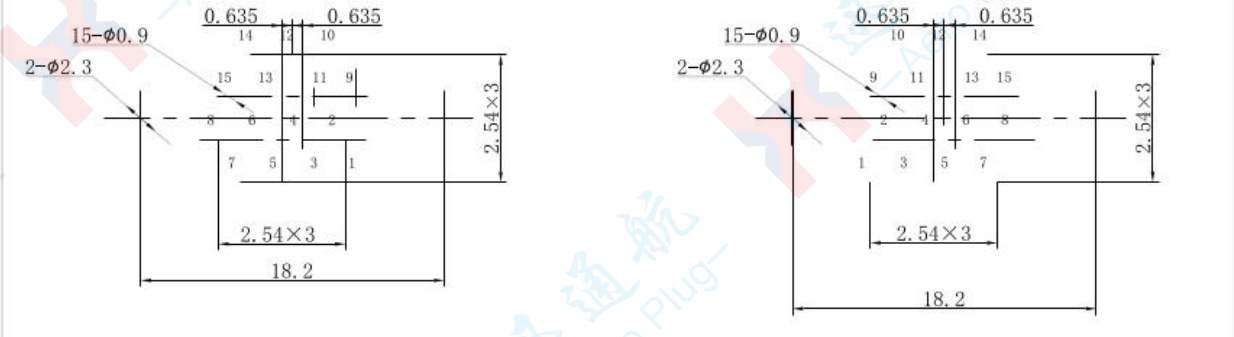

.J30-21TJN1

.J30-21ZKN1

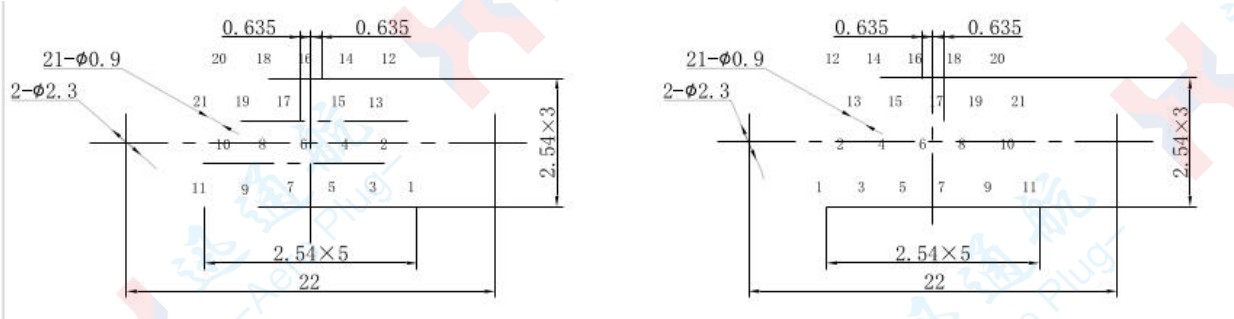

.J30-25TJN1

.J30-25ZKN1

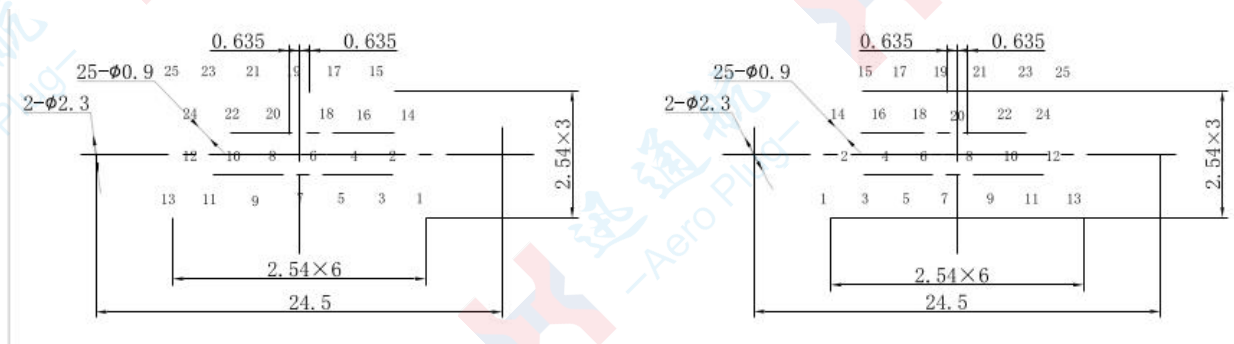

.J30-31TJN1

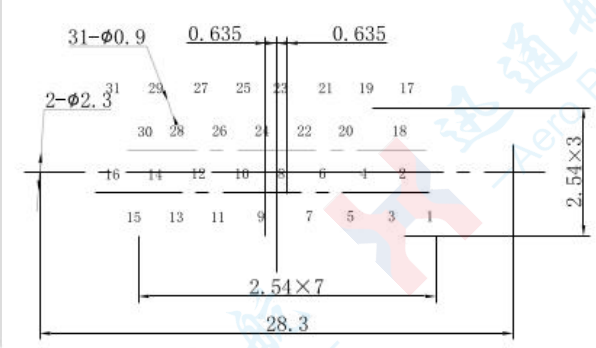

.J30-31ZKN1

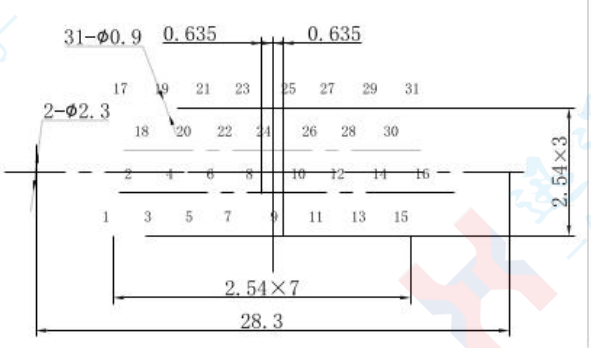

.J30-37TJN1

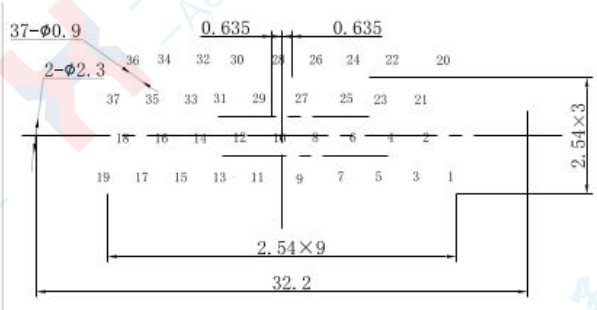

.J30-37ZKN1

.J30-51TJN1

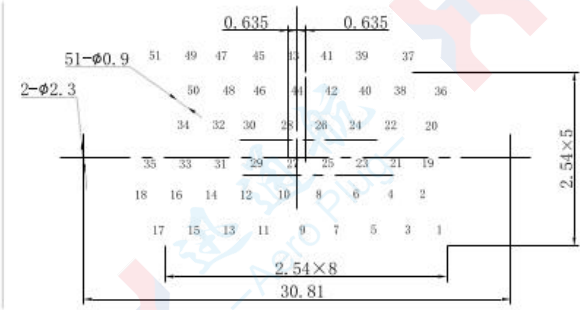

.J30-51ZKN1

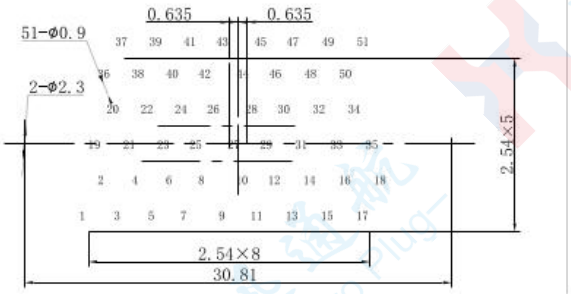

J30—□TJW/□ZKW(Grid Spacing: 2.54×2.54)

.J30-9TJW

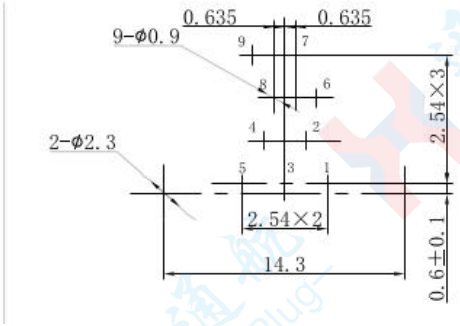

.J30-9ZKW

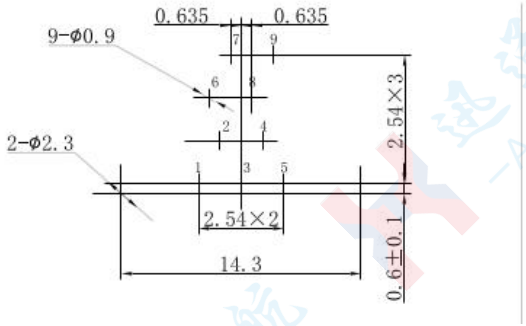

.J30-15TJW

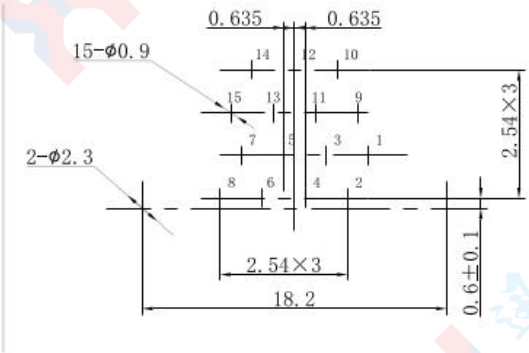

.J30-15ZKW

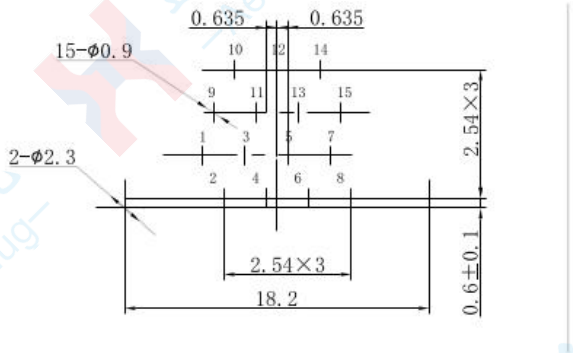

.J30-21TJW

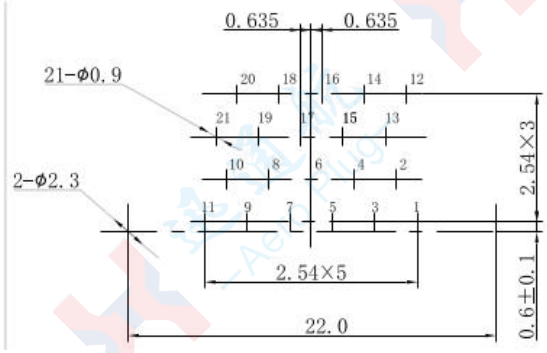

.J30-21ZKW

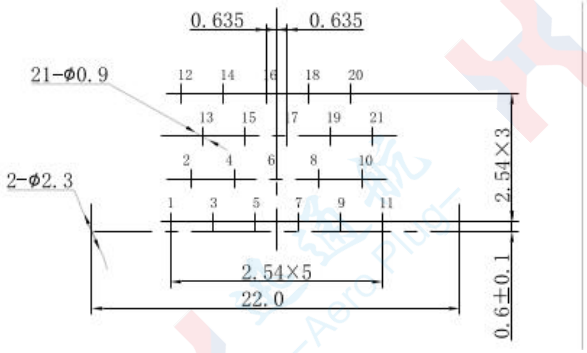

.J30-25TJW

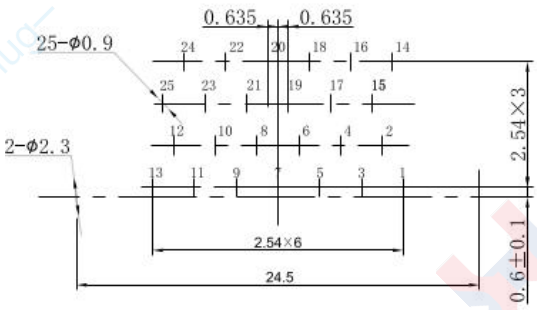

.J30-25ZKW

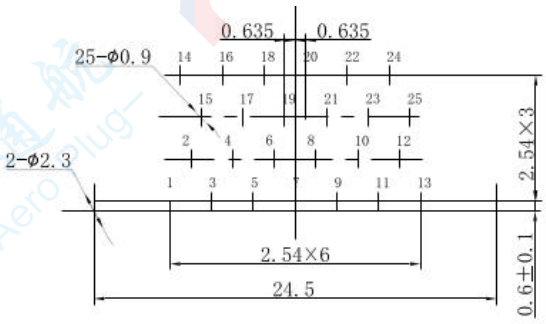

.J30-31TJW

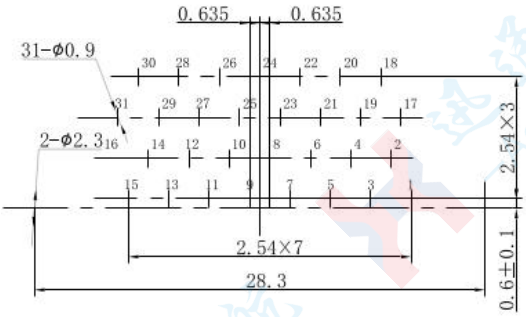

.J30-31ZKW

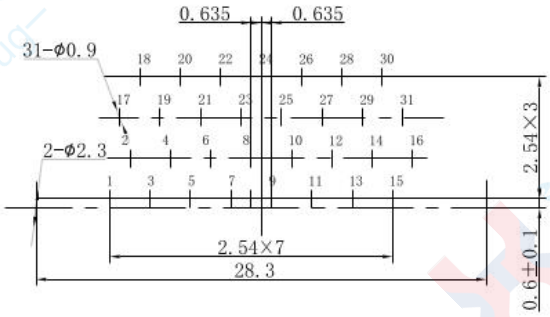

.J30-37TJW

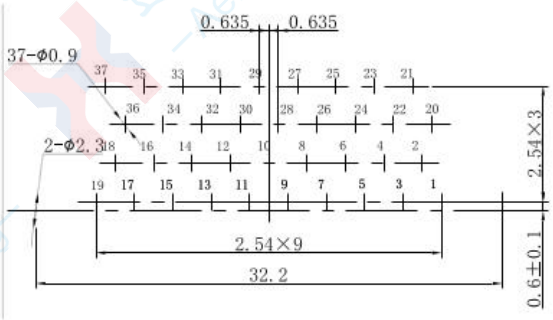

.J30-37ZKW

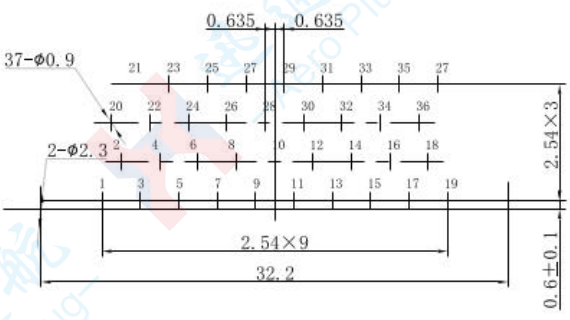

.J30-51TJW

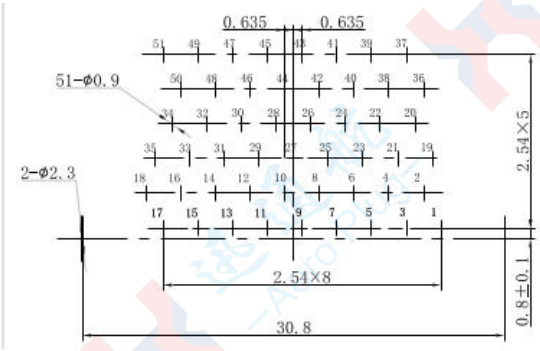

.J30-51ZKW

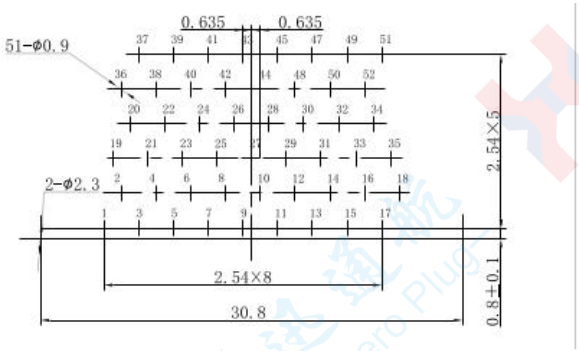

J30—□TJW/□ZKW(Grid Spacing: 1.27×2.54)

.J30-9TJW-J

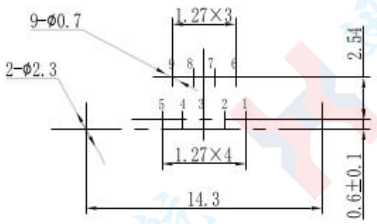

.J30-9ZKW-J

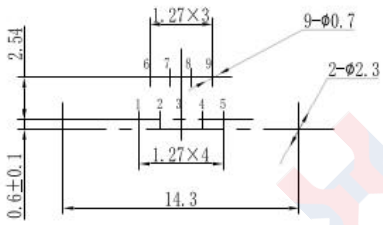

. J30-15TJW-J

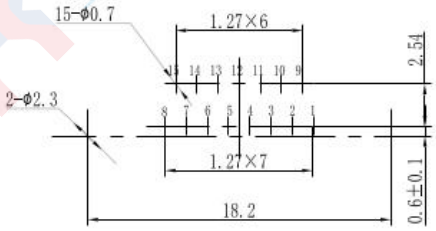

. J30-15ZKW-J

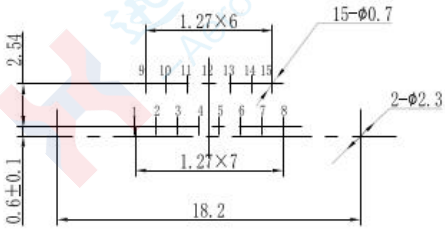

. J30-21TJW-J

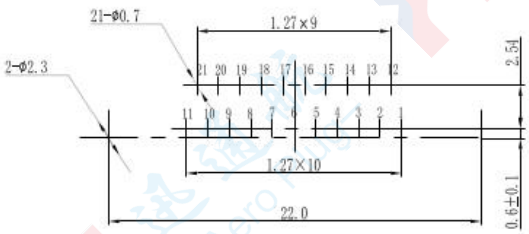

. J30-21ZKW-J

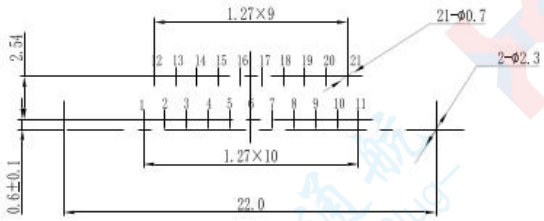

. J30-25TJW-J

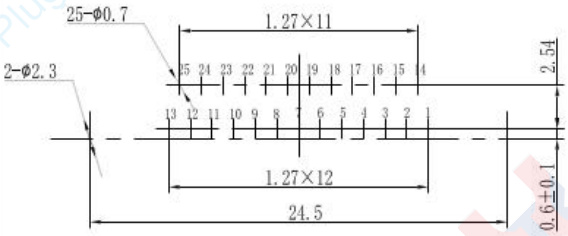

. J30-25ZKW-J

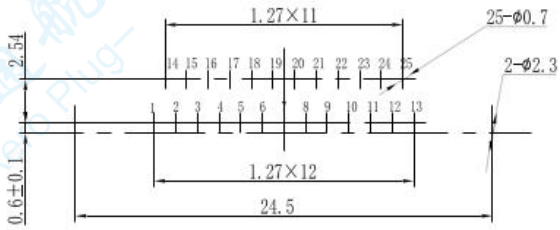

. J30-31TJW-J

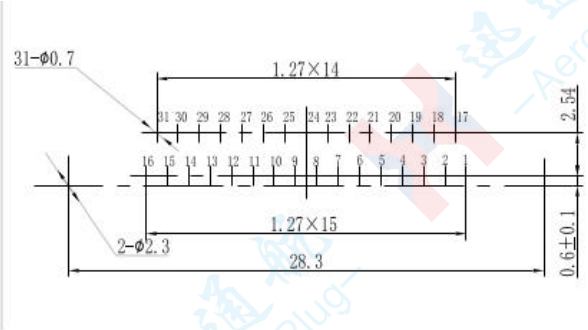

. J30-31ZKW-J

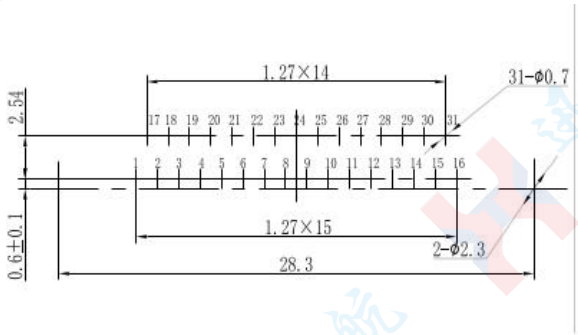

. J30-37TJW-J

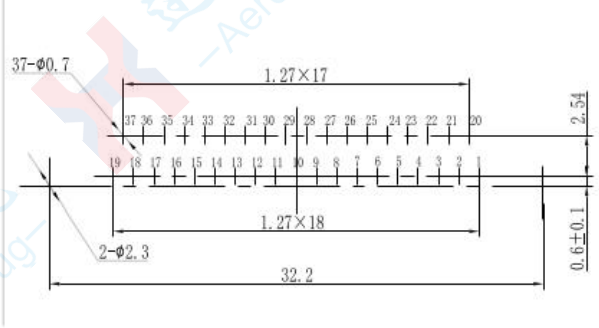

. J30-37ZKW-J

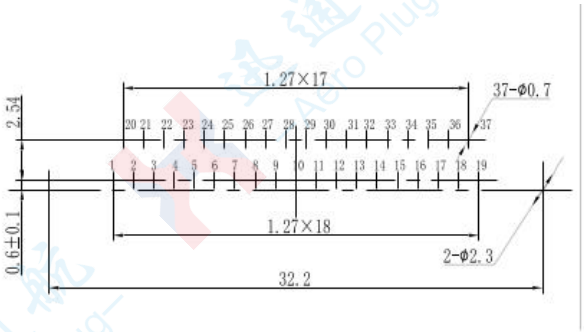

. J30-51TJW-J

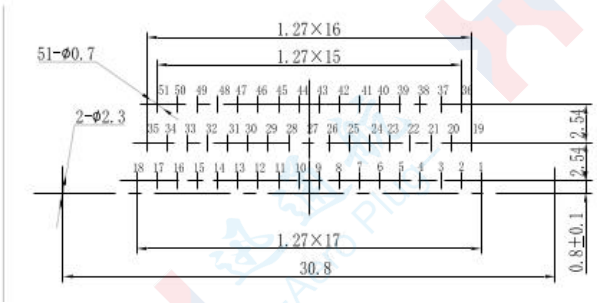

. J30-51ZKW-J

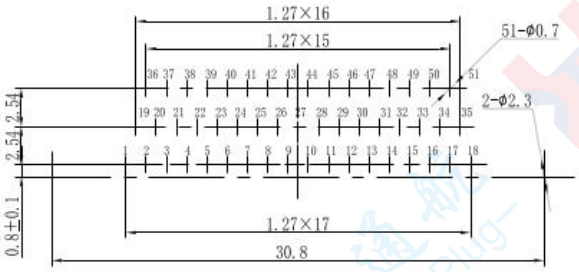

J30JZ Micro-Rectangular Electrical Connector

Product Features

■Ten core specifications available: 9, 15, 21, 25, 31, 37, 51, 66, 74, and 100 cores.

■Contact grid (viewed from the mating end face): pitch 1.27mm, row spacing 1.1mm.

■The plug adopts low insertion/extraction force stranded elastic twist pins, featuring low mating force, high contact reliability, and long mechanical service life.

■Suitable for wires with cross-sectional area of 0.1mm² ~ 0.15mm².

■Compared with conventional J30J series products of the same specification, this series has smaller overall dimensions: length reduced by at least 5mm, width reduced by at least 2.9mm, and height reduced by at least 2mm. With a volume only about 40% of that of conventional J30J products, it is a micro-rectangular electrical connector with reasonable and reliable structure.

■For applications requiring higher thread strength and shell strength, corresponding products with stainless steel shell material can be selected in accordance with the naming specifications.

■Product performance complies with GJB2446 and is equivalent to U.S. military standard MIL-DTL-83513.

■Executive Standard: Detailed Specification for J30JZ Series Micro-Rectangular Electrical Connectors

Technical Characteristics

■Ambient Temperature: -55℃ ~ +125℃

■Vibration: 10Hz ~ 2000Hz 196m/s2

■Random Vibration: Power Spectral Density (PSD) 0.4G²/Hz, Total Acceleration RMS 23.1G

■Shock: 735m/s2 11ms

■Rated Current: 3A

■Contact Resistance: ≤ 10mΩ

■Insulation Resistance: ≥ 5000MΩ

■Dielectric Withstand Voltage: 600V

■Mechanical Service Life: 2000 Cycles

Spectrum Arrangement

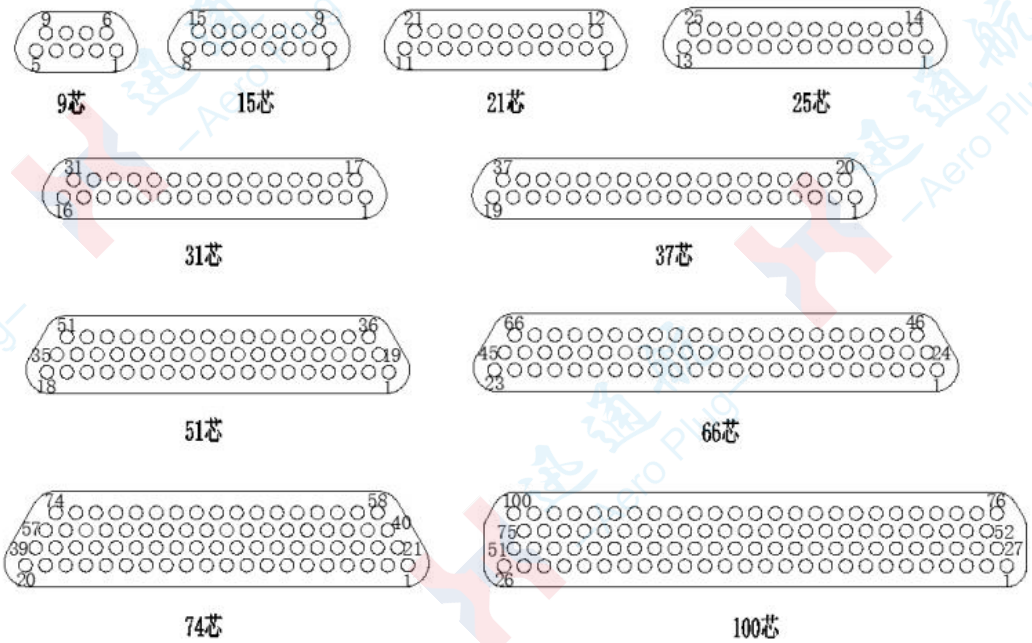

Note: Viewed from the mating end

Model Nomenclature

J30JZ/X X X X TJ CA P01 (Additional Notes)
J30JZ X X X ZK CA L01 (Additional Notes)
① ② ③ ④ ⑤ ⑥ ⑦

① Main Designation: J30JZ: Micro-rectangular electrical connector with smaller volume than conventional J30J series products of the same specification.

J30JZ/X-J30JZ series micro rectangular electrical connectors with light insertion and extraction force

② Material and Surface Treatment:: N-Aluminum shell, electroless nickel platin
S-Stainless steel, passivation
Housing Structure: P-Vertical mounting structure.
L-Horizontal mounting structure.
PE-Same overall dimensions as J30JZ□ZKCA000 series products,
M2 threaded hole on the housing with an additional 2.8mm deep,
φ2.1 counterbore on the mating end, compatible with L02 type accessories
Not specified: Free-end housing structure.

③ Number of Contacts: 9、15、21、25、31、37、51、66、74、100

④ Contact Type: TJ -Plug with pins.
ZK - Socket with sockets. (TJ and ZK are fixed matches)

⑤ Board Mount Type: CA - Crimp SA- Solder
NA - Straight PCB moun WA- Right-angle PCB mount

⑥ Locking Component Type: 000-Without locking component P01-With mounting screw locking component L01 With locking screw

Note: Additional Notes are not part of the ordering code. When selecting products, customers shall specify crimping guidelines in the brackets, such as wire cross-sectional area, length, and color. For special wiring requirements, please provide the wiring configuration. The J30JZPEN□ZKCA000 type socket is mainly suitable for free-end cable applications requiring mating and locking. For the J30JZ straight rigid PCB mount series (74 and 100 cores), the pin diameter is φ0.4mm to reduce the PCB pad diameter (φ0.55mm) and lower the user's board layout process difficulty.

Product Family Tree

The J30J product family tree can be listed separately by Plug (Socket) Assembly Family Tree, Locking Component Family Tree, Wire Clip Assembly Family Tree, and Plug (Socket) Family Tree, as detailed below:

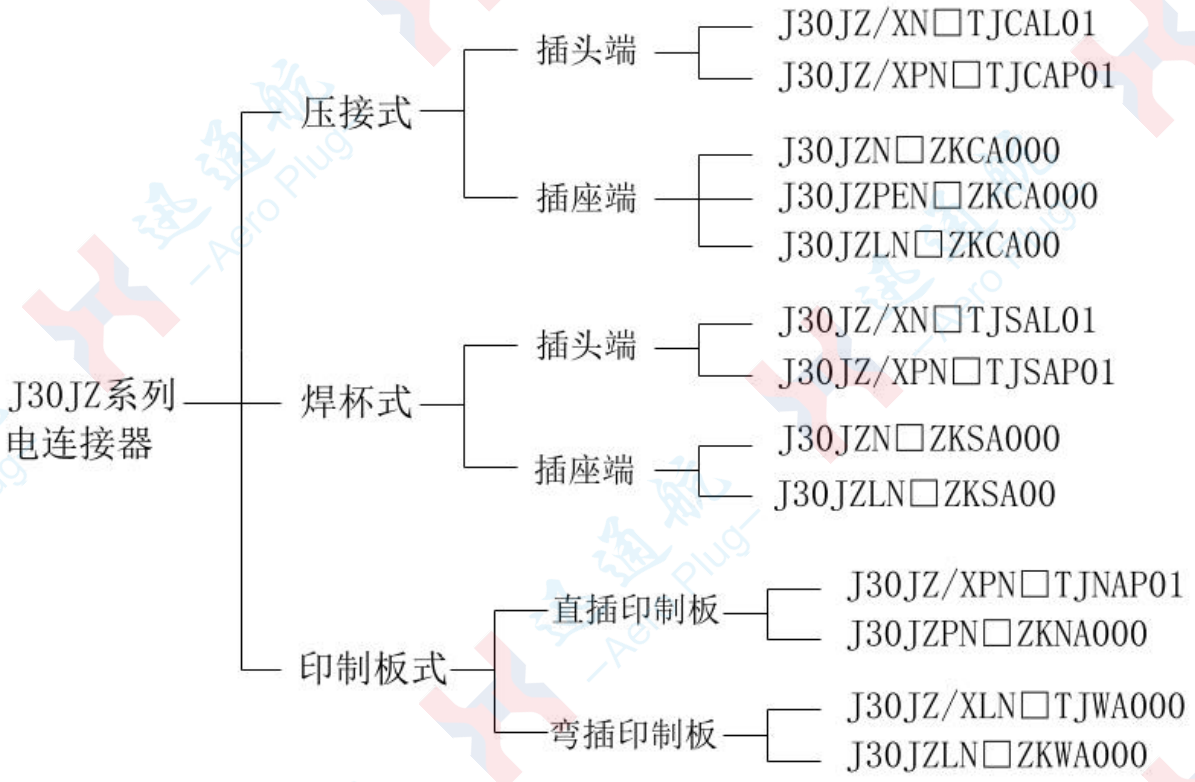

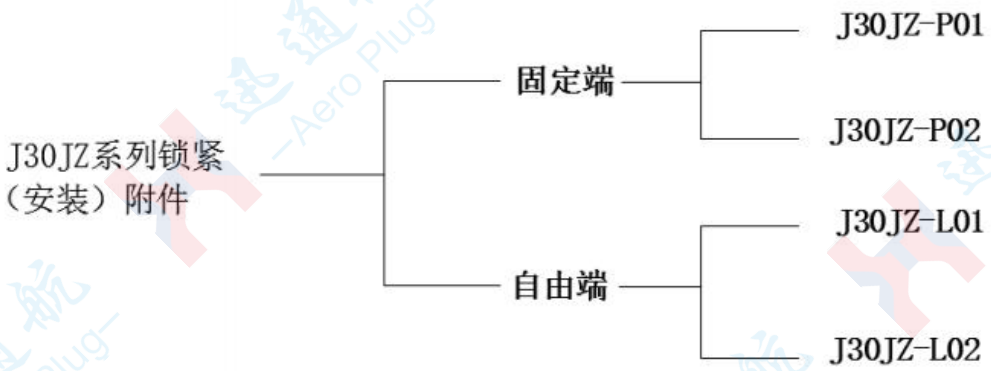

Plug J30JZ/X Crimp Basic Type: J30JZ/XN□TJCAL01
Free-End Housing Structure Product

Number of Cores： 9、15、21、25、31、37、51、66、74、100

Product Stereogram(25-core)

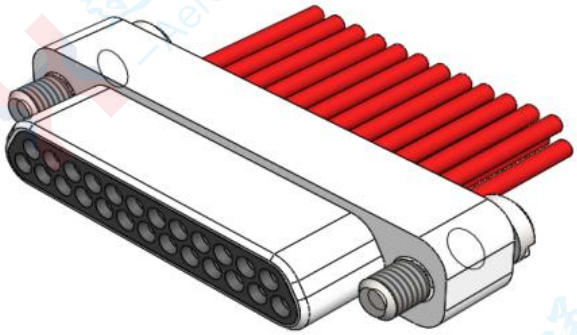

Product Outline Dimension Drawing

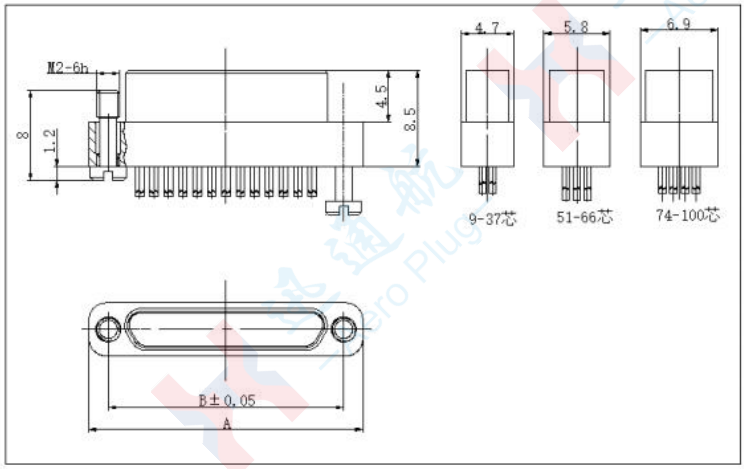

J30JZ/XN□TJCAL01

Order Mark	A	B
J30JZ/XN9TJCAL01	14	10.6
J30JZ/XN15TJCAL01	17.8	14.4
J30JZ/XN21TJCAL01	21.6	18.2
J30JZ/XN25TJCAL01	24.2	20.8
J30JZ/XN31TJCAL01	28	24.6
J30JZ/XN37TJCAL01	31.8	28.4
J30JZ/XN51TJCAL01	30.5	27.1
J30JZ/XN66TJCAL01	36.9	33.5
J30JZ/XN74TJCAL01	33.1	29.7
J30JZ/XN100TJCAL01	40.7	37.3

Socket J30JZ/X Crimp Basic Type: J30JZN□ZKCA000
Vertically Mountable

Number of Cores： 9、15、21、25、31、37、51、66、74、100

Product Stereogram(25-core)

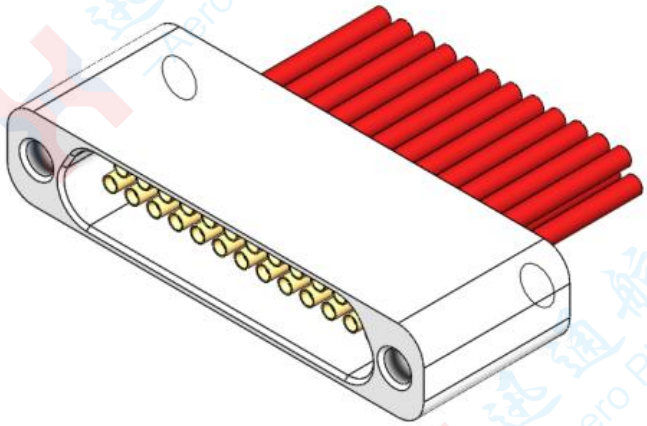

Product Outline Dimension Drawing

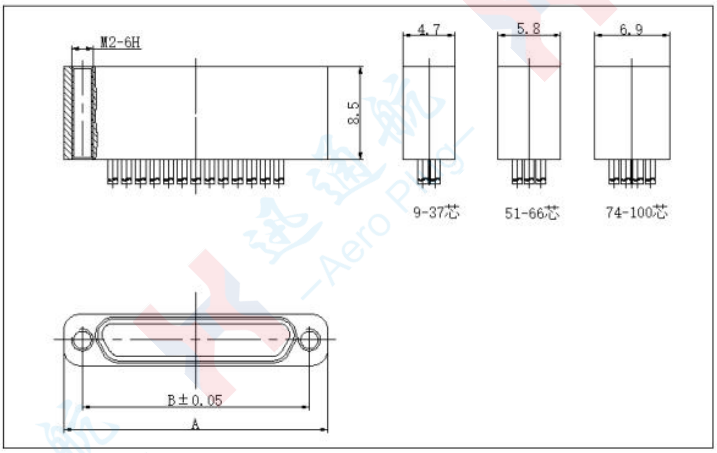

J30JZN□ZKCA000

Order Mark	A	B
J30JZN9ZKCA000	14	10.6
J30JZN15ZKCA000	17.8	14.4
J30JZN21ZKCA000	21.6	18.2
J30JZN25ZKCA000	24.2	20.8
J30JZN31ZKCA000	28	24.6
J30JZN37ZKCA000	31.8	28.4
J30JZN51ZKCA000	30.5	27.1
J30JZN66ZKCA000	36.9	33.5
J30JZN74ZKCA000	33.1	29.7
J30JZN100ZKCA000	40.7	37.3

Socket J30JZ Crimp Basic Type: J30JZPEN□ZKCA000

Vertical Mount Modified Housing Structure; Select Type L02 Locking Screws when locking with the mating plug is required

Number of Cores: 9、15、21、25、31、37、51、66、74、100

Product Stereogram(25-core)

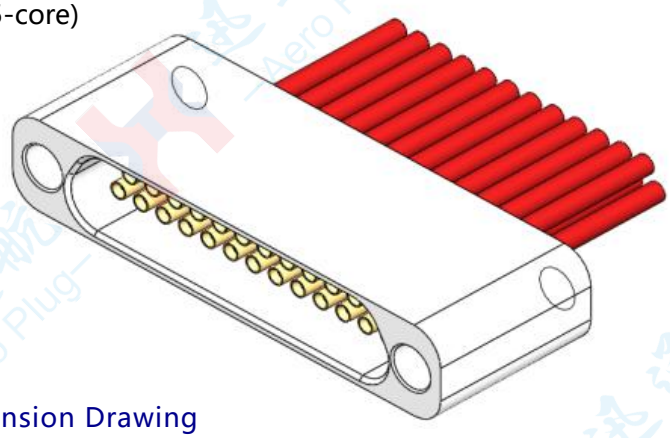

Product Outline Dimension Drawing

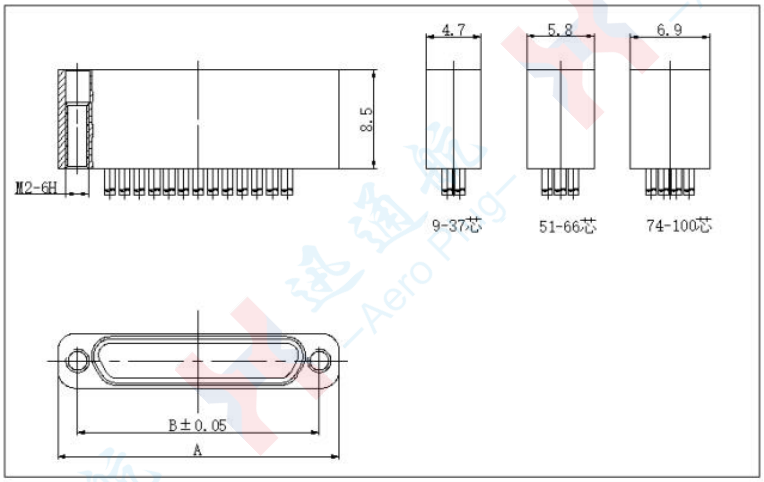

J30JZPEN□ZKCA000

Ordering Code	A	B
J30JZPEN9ZKCA000	14	10.6
J30JZPEN15ZKCA000	17.8	14.4
J30JZPEN21ZKCA000	21.6	18.2
J30JZPEN25ZKCA000	24.2	20.8
J30JZPEN31ZKCA000	28	24.6
J30JZPEN37ZKCA000	31.8	28.4
J30JZPEN51ZKCA000	30.5	27.1
J30JZPEN66ZKCA000	36.9	33.5
J30JZPEN74ZKCA000	33.1	29.7
J30JZPEN100ZKCA000	40.7	37.3

Plug J30JZ Crimp Basic Type: J30JZLN□ZKCA000
Horizontal Mount Structure

Number of Cores： 9、15、21、25、31、37、51、66、74、100

Product Stereogram(25-core)

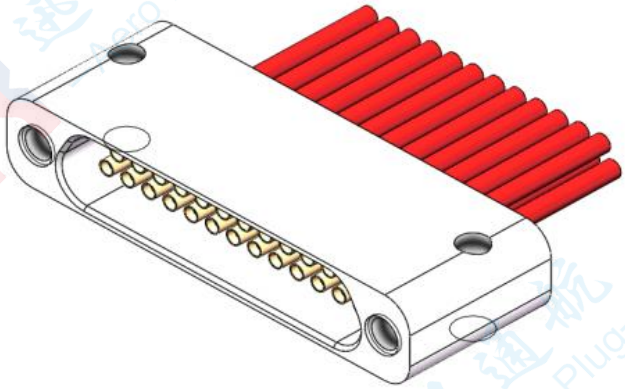

Product Outline Dimension Dr

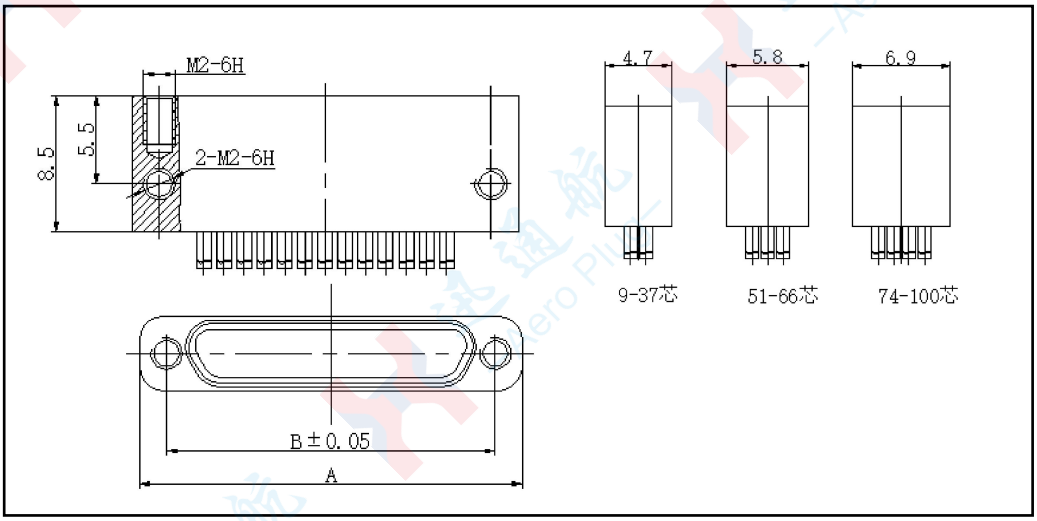

J30JZLN□ZKCA000

Order Mark	A	B
J30JZLN9ZKCA000	14	10.6
J30JZLN15ZKCA000	17.8	14.4
J30JZLN21ZKCA000	21.6	18.2
J30JZLN25ZKCA000	24.2	20.8
J30JZLN31ZKCA000	28	24.6
J30JZLN37ZKCA000	31.8	28.4
J30JZLN51ZKCA000	30.5	27.1
J30JZLN66ZKCA000	36.9	33.5
J30JZLN74ZKCA000	33.1	29.7
J30JZLN100ZKCA000	40.7	37.3

Plug J30JZ/X Crimp Basic Type: J30JZ/XPN□TJCAP01

Vertical Mount Housing Structure

Number of Cores： 9、15、21、25、31、37、51、66、74、100

Product Stereogram(25-core

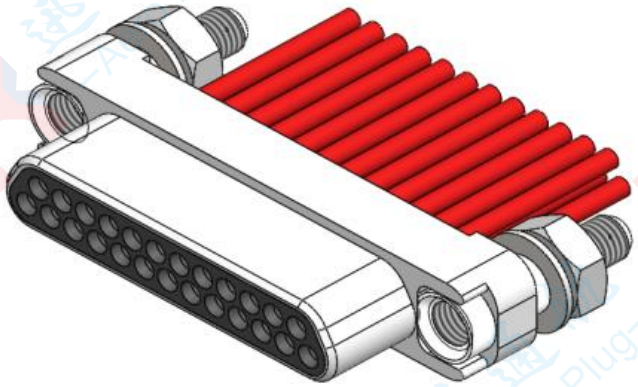

Product Outline Dimension Drawing

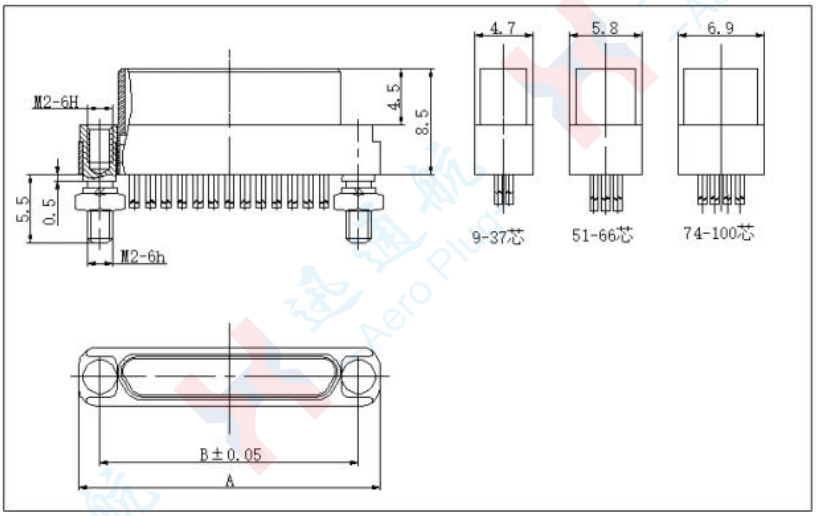

J30JZ/XPN□TJCAP01

Order Mark	A	B
J30JZ/XPN9TJCAP01	14	10.6
J30JZ/XPN15TJCAP01	17.8	4.4
J30JZ/XPN21TJCAP01	21.6	18.2
J30JZ/XPN25TJCAP01	24.2	20.8
J30JZ/XPN31TJCAP01	28	24.6
J30JZ/XPN37TJCAP01	31.8	28.4
J30JZ/XPN51TJCAP01	30.5	27.1
J30JZ/XPN66TJCAP01	36.9	33.5
J30JZ/XPN74TJCAP01	33.1	29.7
J30JZ/XPN100TJCAP01	40.7	37.3

Plug J30JZ/X Soldered Type: J30JZ/XN□TJSAL01
Free-End Housing Structure

Number of Cores： 9、15、21、25、31、37、51、66、74、100

Product Stereogram

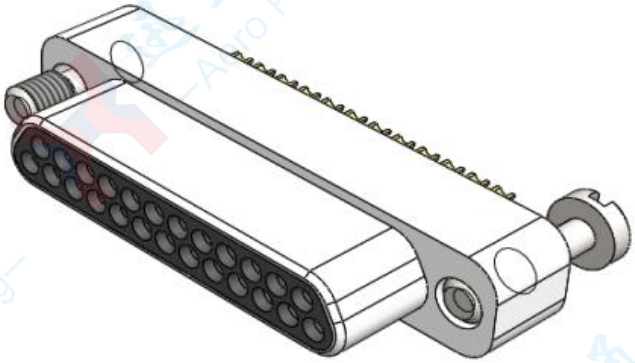

Product Outline Dimension Drawing

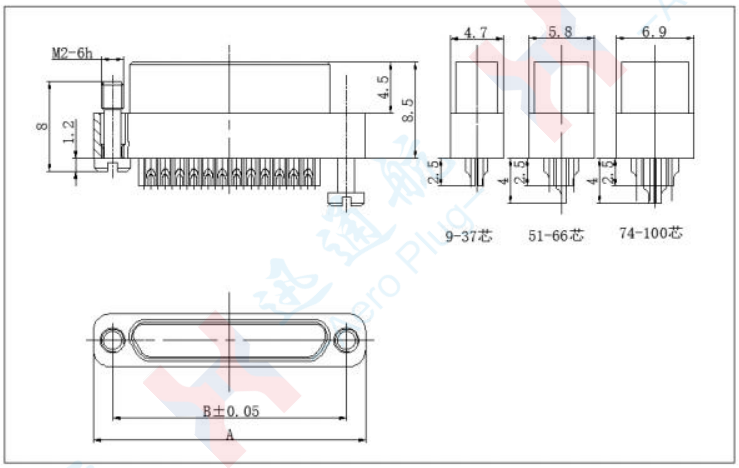

J30JZ/XN□TJSAL01

Order Mark	A	B
J30JZN9TJSAL01	14	10.6
J30JZN15TJSAL01	17.8	14.4
J30JZN21TJSAL01	21.6	18.2
J30JZN25TJSAL01	24.2	20.8
J30JZN31TJSAL01	28	24.6
J30JZN37TJSAL01	31.8	28.4
J30JZN51TJSAL01	30.5	27.1
J30JZN66TJSAL01	36.9	33.5
J30JZN74TJSAL01	33.1	29.7
J30JZN100TJSAL01	40.7	37.3

Socket J30JZ Soldered Type: J30JZN□ZKSA000
Free-End Housing Structure (Vertically Mountable)

Number of Cores： 9、15、21、25、31、37、51、66、74、100

Product Stereogram

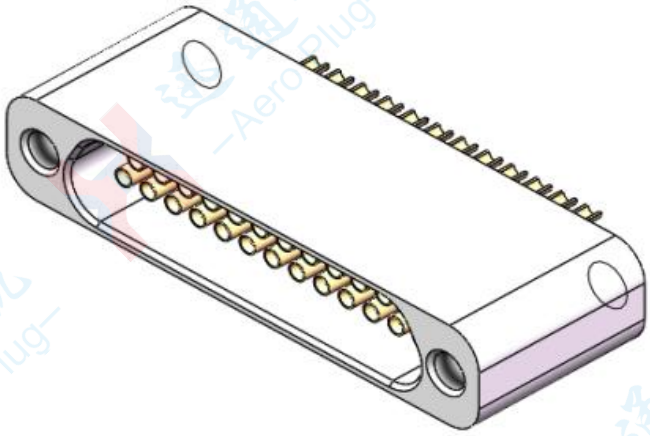

Product Outline Dimension Drawing

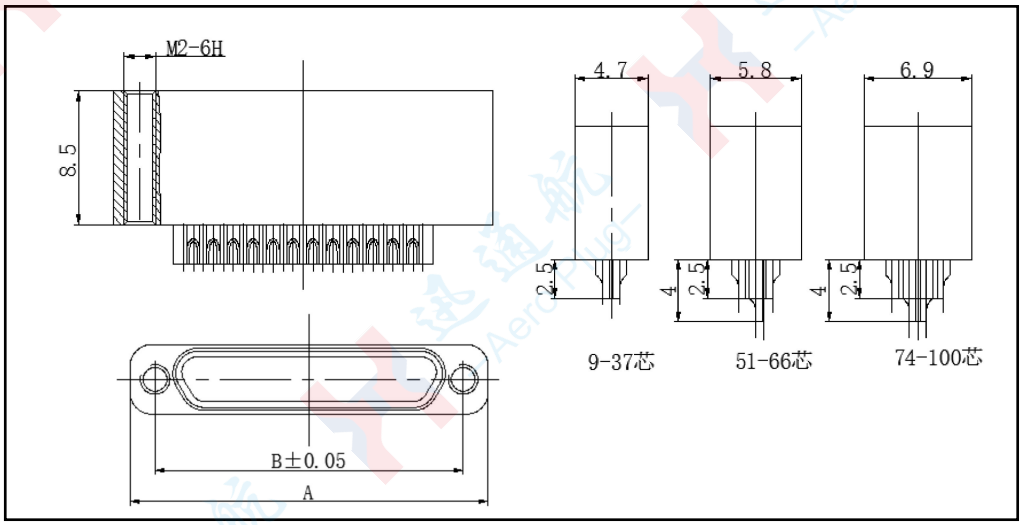

J30JZN□ZKSA000

Order Mark	A	B
J30JZN9ZKSA000	14	10.6
J30JZN15ZKSA000	17.8	14.4
J30JZN21ZKSA000	21.6	18.2
J30JZN25ZKSA000	24.2	20.8
J30JZN31ZKSA000	28	24.6
J30JZN37ZKSA000	31.8	28.4
J30JZN51ZKSA000	30.5	27.1
J30JZN66ZKSA000	36.9	33.5
J30JZN74ZKSA000	33.1	29.7
J30JZN100ZKSA000	40.7	37.3

Socket J30JZ Soldered Type: J30JZLN□ZKSA000
Horizontal Mount Housing Structure

Number of Cores: 9、15、21、25、31、37、51、66、74、100

Product Stereogram

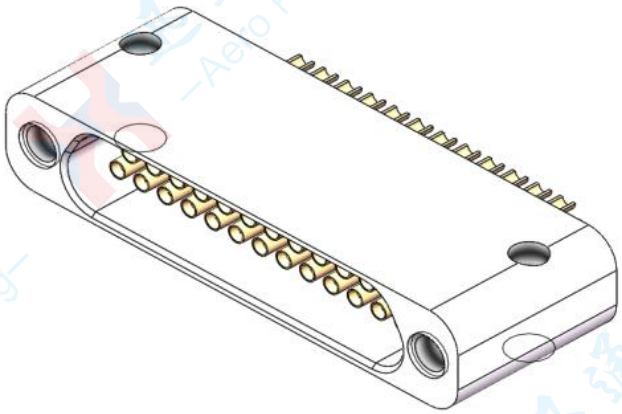

Product Outline Dimension Drawing

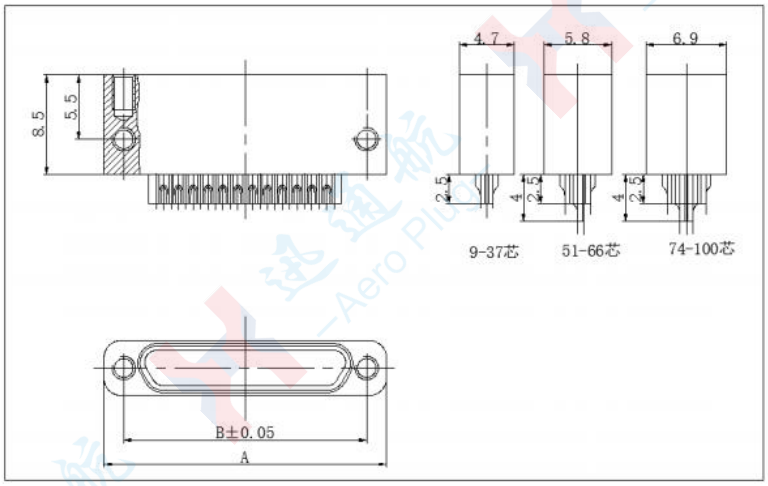

J30JZLN□ZKSA000

Order Mark	A	B
J30JZLN9ZKSA000	14	10.6
J30JZLN15ZKSA000	17.8	14.4
J30JZLN21ZKSA000	21.6	18.2
J30JZLN25ZKSA000	24.2	20.8
J30JZLN31ZKSA000	28	24.6
J30JZLN37ZKSA000	31.8	28.4
J30JZLN51ZKSA000	30.5	27.1
J30JZLN66ZKSA000	36.9	33.5
J30JZLN74ZKSA000	33.1	29.7
J30JZLN100ZKSA000	40.7	37.3

Plug J30JZ/X Soldered Type: J30JZ/XPN□TJSAP01
Vertical Mount End Housing Structure

Number of Cores： 9、15、21、25、31、37、51、66、74、100

Product Stereogram

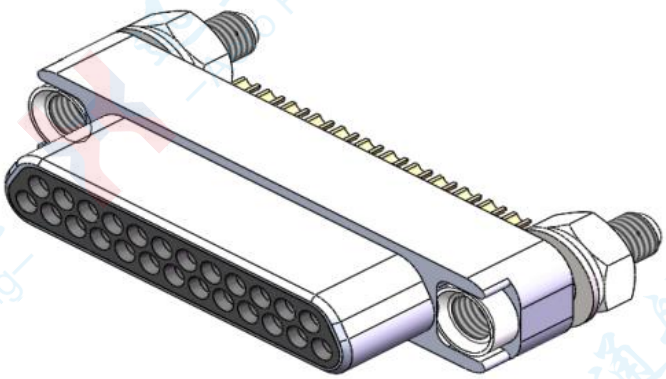

Product Outline Dimension Drawing

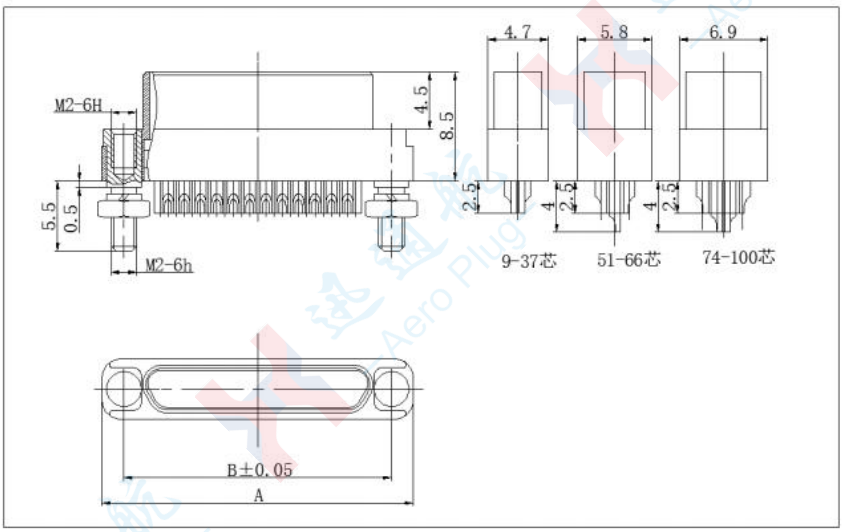

J30JZ/XPN□TJSAP01

Order Mark	A	B
J30JZ/XPN9TJSAP01	14	10.6
J30JZ/XPN15TJSAP01	17.8	14.4
J30JZ/XPN21TJSAP01	21.6	18.2
J30JZ/XPN25TJSAP01	24.2	20.8
J30JZ/XPN31TJSAP01	28	24.6
J30JZ/XPN37TJSAP01	31.8	28.4
J30JZ/XPN51TJSAP01	30.5	27.1
J30JZ/XPN66TJSAP01	36.9	33.5
J30JZ/XPN74TJSAP01	33.1	29.7
J30JZ/XPN100TJSAP01	40.7	37.3

Plug J30JZ/X Straight Plug Type: J30JZ/XPN□TJNAP01
Vertical Mount; Suitable for Printed Circuit Board (PCB) Thickness: 2.5 (max); Grid Pitch (Pitch × Row Spacing): 1.27×1.1

Number of Cores: 9、15、21、25、31、37、51、66、74、100

Product Stereogram

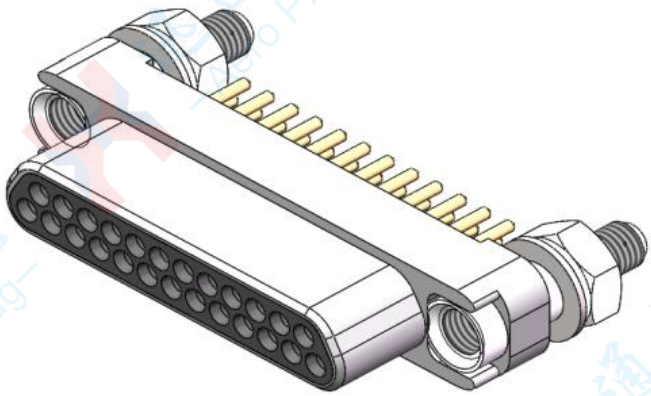

Product Outline Dimension Drawing

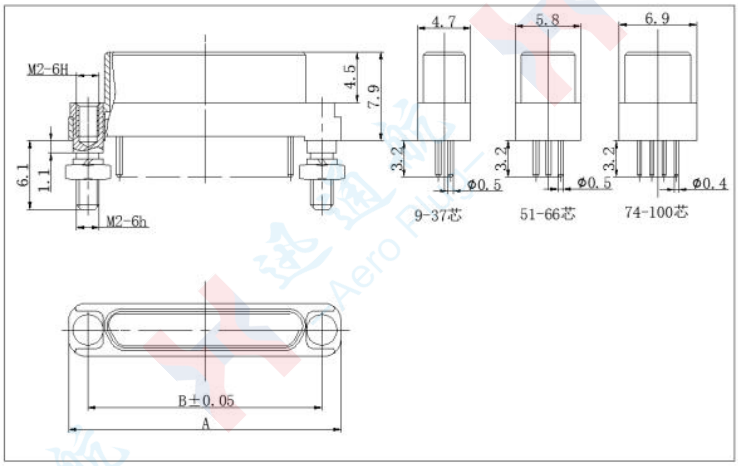

J30JZ/XPN□TJNAP01

Order Mark	A	B
J30JZ/XPN9TJNAP01	14	10.6
J30JZ/XPN15TJNAP01	17.8	14.4
J30JZ/XPN21TJNAP01	21.6	18.2
J30JZ/XPN25TJNAP01	24.2	20.8
J30JZ/XPN31TJNAP01	28	24.6
J30JZ/XPN37TJNAP01	31.8	28.4
J30JZ/XPN51TJNAP01	30.5	27.1
J30JZ/XPN66TJNAP01	36.9	33.5
J30JZ/XPN74TJNAP01	33.1	29.7
J30JZ/XPN100TJNAP01	40.7	37.3

Optimum Size of PCB Aperture

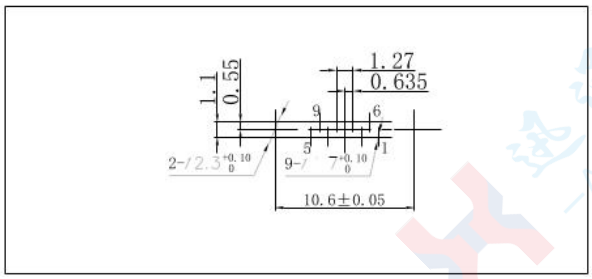

J30JZ/XPN9TJNAP01

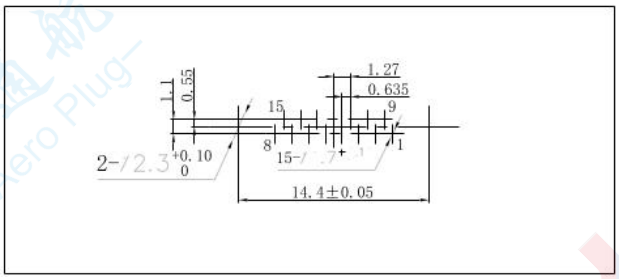

J30JZ/XPN15TJNAP01

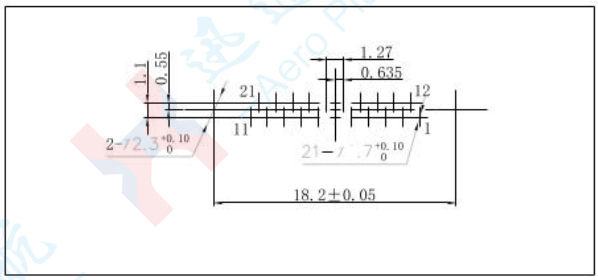

J30JZ/XPN21TJNAP01

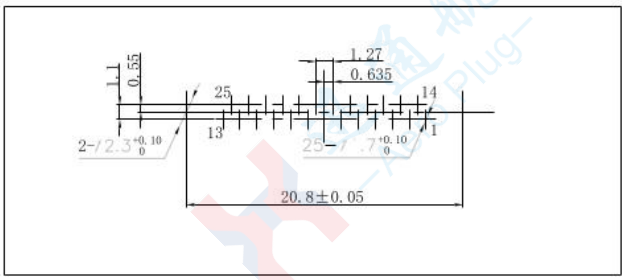

J30JZ/XPN25TJNAP01

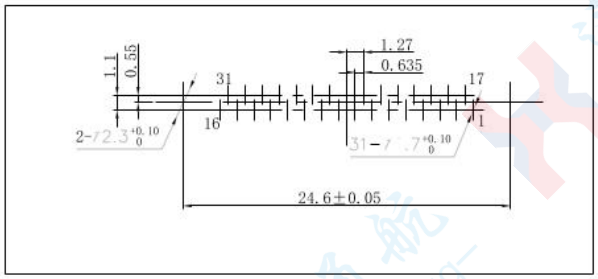

J30JZ/XPN31TJNAP01

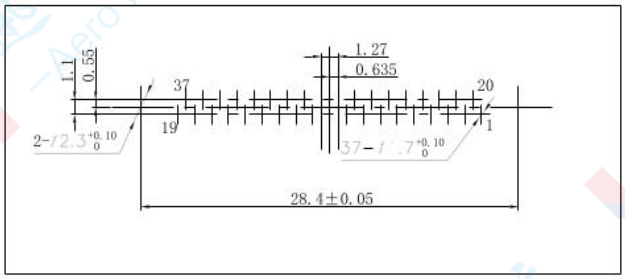

J30JZ/XPN37TJNAP01

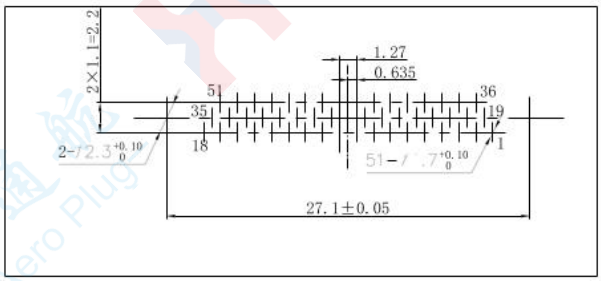

J30JZ/XPN51TJNAP01

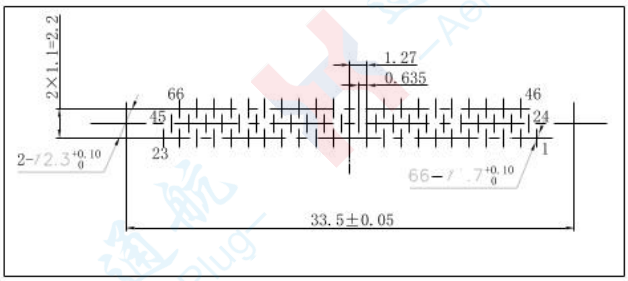

J30JZ/XPN66TJNAP01

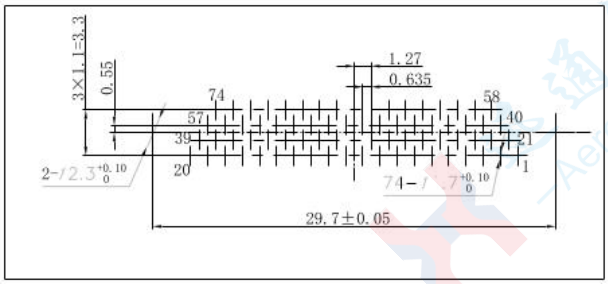

J30JZ/XPN74TJNAP01

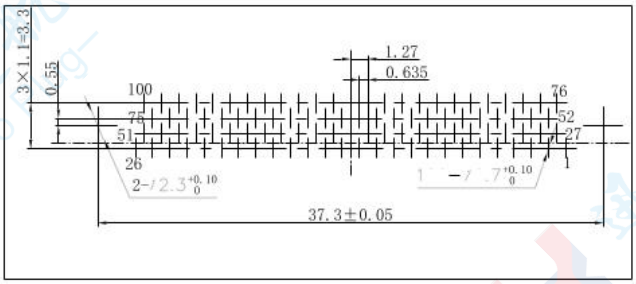

J30JZ/XPN100TJNAP01

Socket J30JZ Straight Plug Type: J30JZPN□ZKNA000
Vertical Mount; Suitable for Printed Circuit Board (PCB) Thickness: 2.5 (max); Grid Pitch (Pitch × Row Spacing): 1.27×1.1

Number of Cores: 9、15、21、25、31、37、51、66、74、100

Product Stereogram

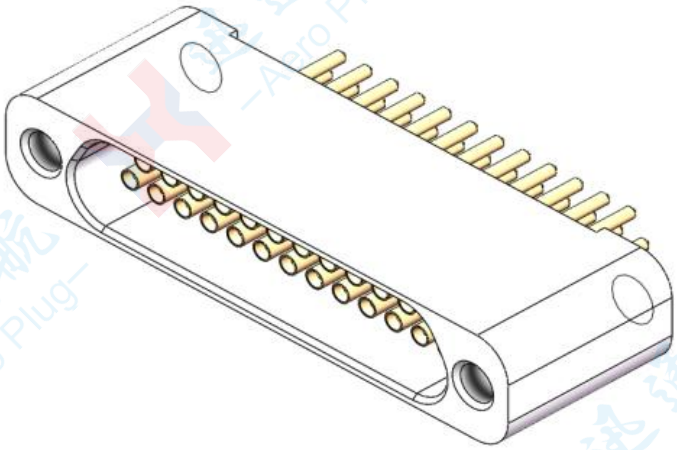

Product Outline Dimension Drawing

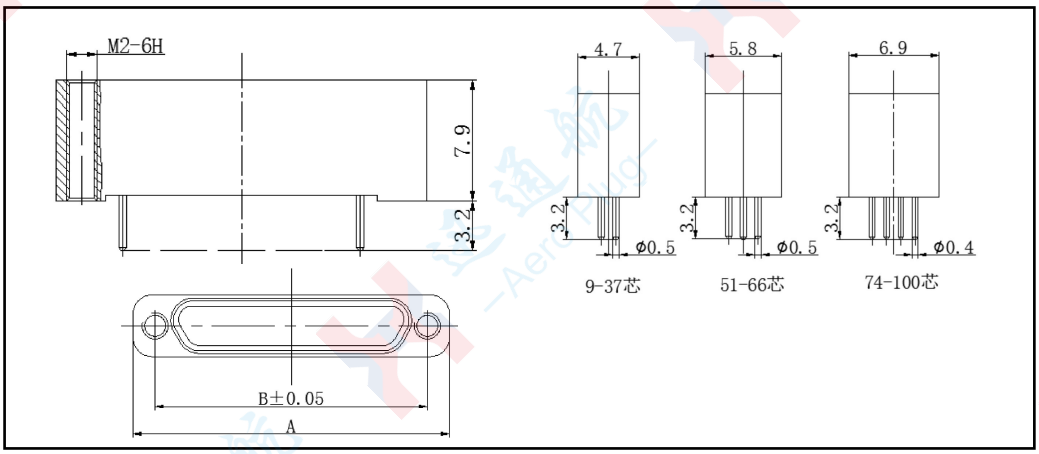

J30JZPN□ZKNA000

Order Mark	A	B
J30JZPN9ZKNA000	14	10.6
J30JZPN15ZKNA000	17.8	14.4
J30JZPN21ZKNA000	21.6	18.2
J30JZPN25ZKNA000	24.2	20.8
J30JZPN31ZKNA000	28	24.6
J30JZPN37ZKNA000	31.8	28.4
J30JZPN51ZKNA000	30.5	27.1
J30JZPN66ZKNA000	36.9	33.5
J30JZPN74ZKNA000	33.1	29.7
J30JZPN100ZKNA000	40.7	37.3

Optimum Size of PCB Aperture

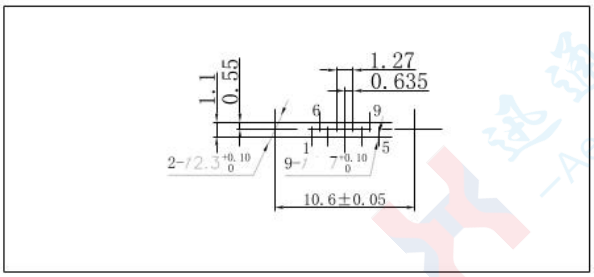

J30JZPN9ZKNA000

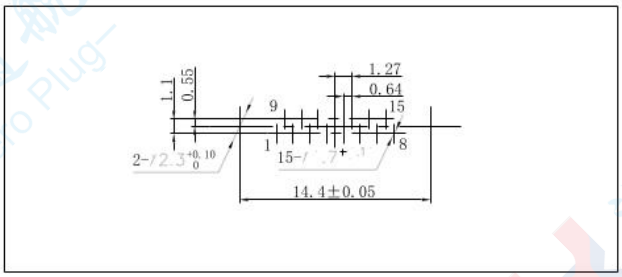

J30JZPN15ZKNA000

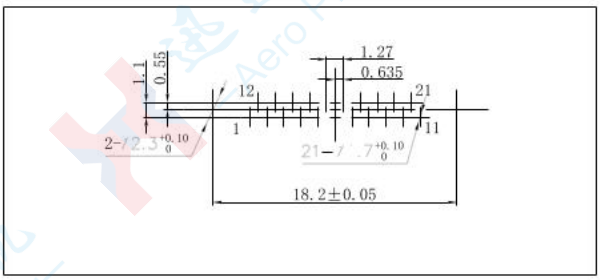

J30JZPN21ZKNA000

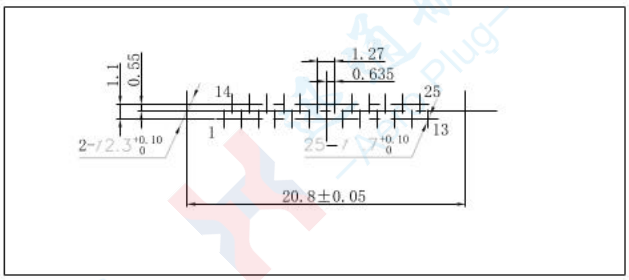

J30JZPN25ZKNA000

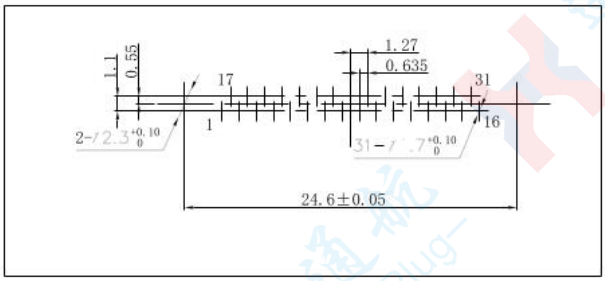

J30JZPN31ZKNA000

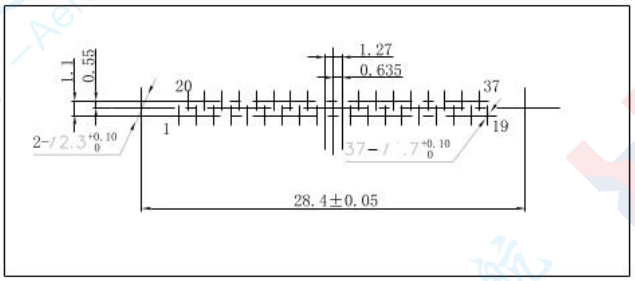

J30JZPN37ZKNA000

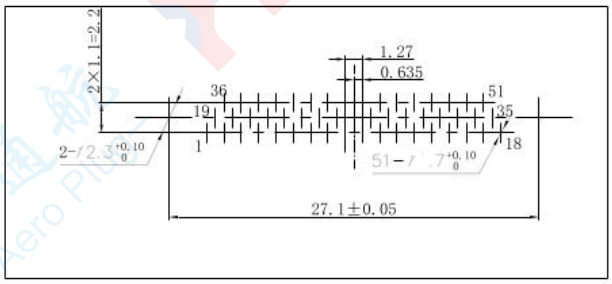

J30JZPN51ZKNA000

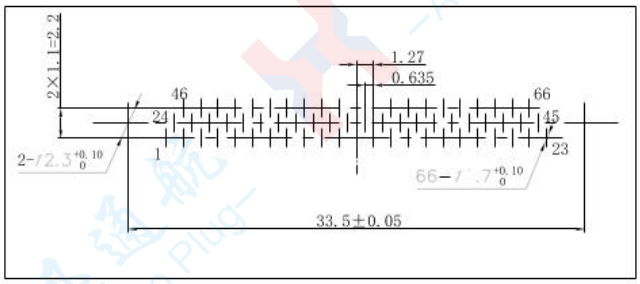

J30JZPN66ZKNA000

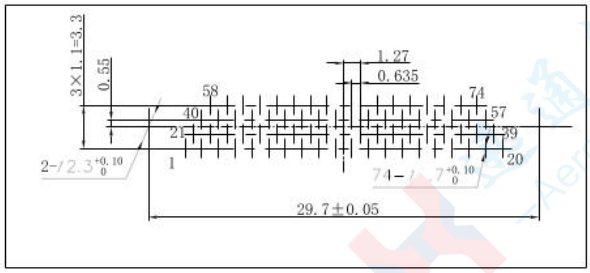

J30JZPN74ZKNA000

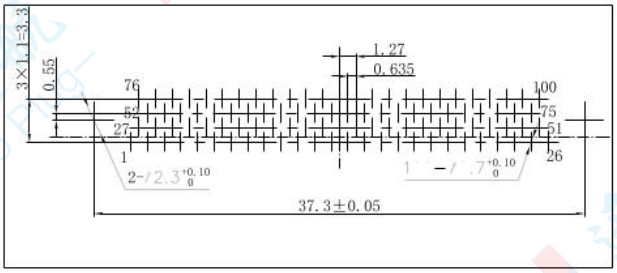

J30JZPN100ZKNA000

Plug J30JZ/X Right-Angle Plug Type: J30JZ/XLN□TJWA000
Suitable for Printed Circuit Board (PCB) Thickness: 2mm (max); Grid Pitch (Pitch × Row Spacing): 1.27×2
Number of Cores: 9、15、21、25、31、37、51、66、74、100

Product Stereogram

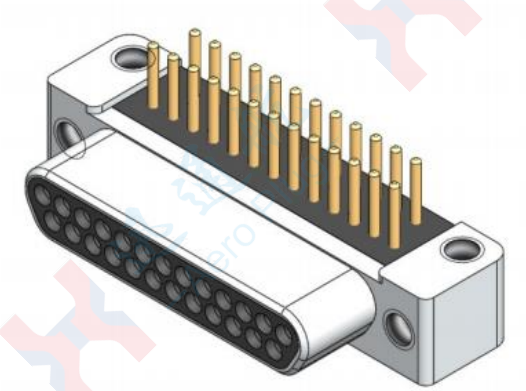

J30JZ/XLN25TJWA000

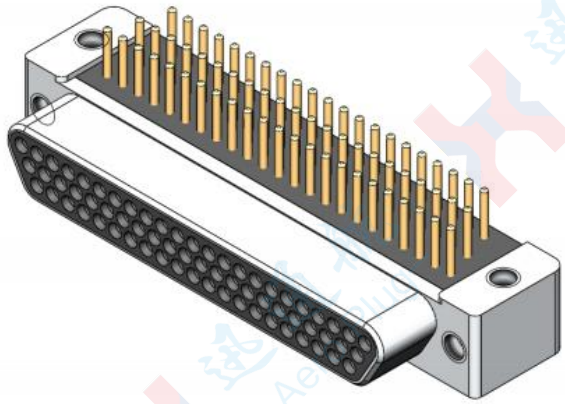

J30JZ/XLN66TJWA000

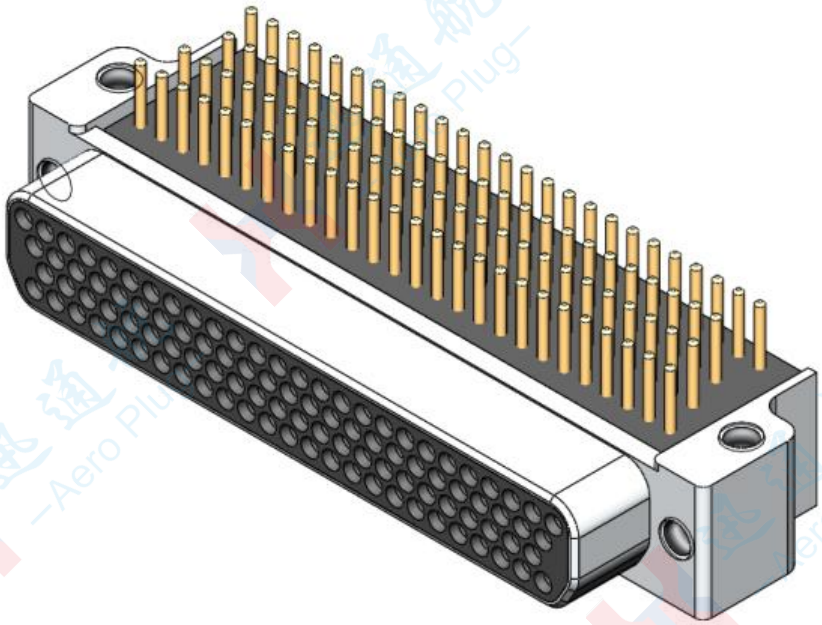

J30JZ/XLN100TJWA000

Product Outline Dimension Drawing

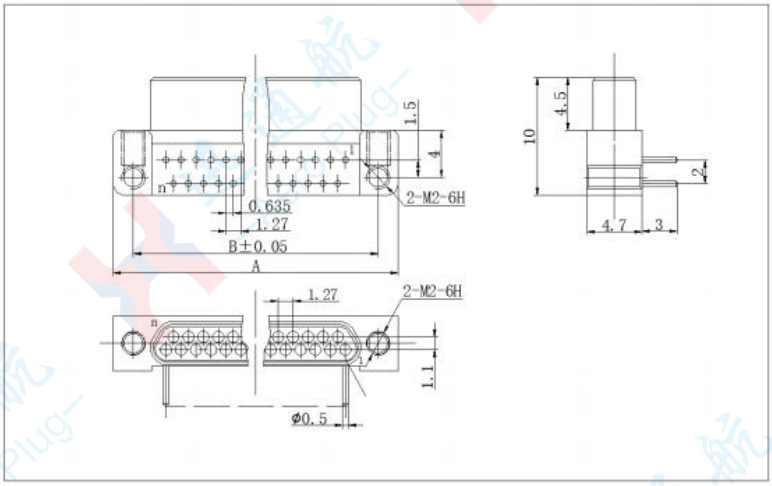

J30JZ/XLN□TJWA000（9、15、21、25、31、37）

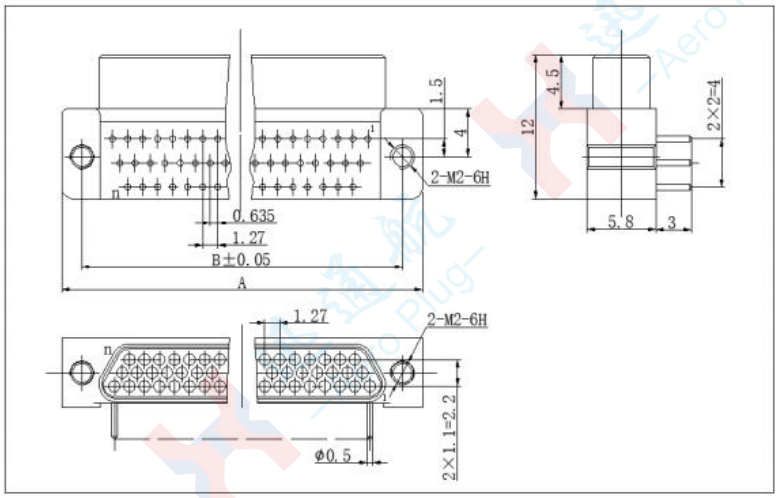

J30JZ/XLN□TJWA000（51、66）

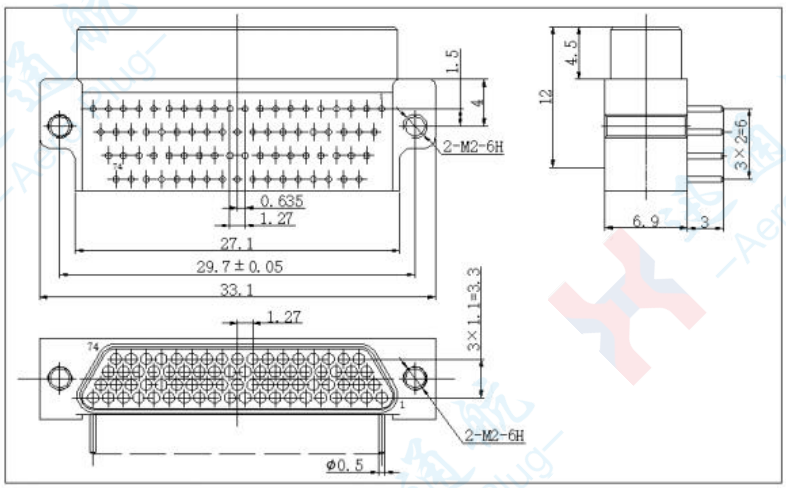

J30JZ/XLN74TJWA000

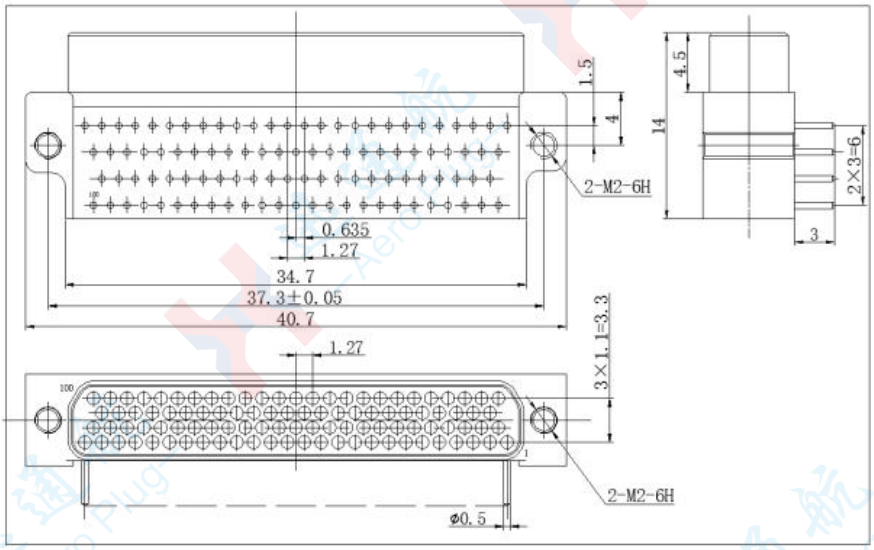

J30JZ/XLN100TJWA000

Order Mark	A	B	n
J30JZ/XLN9TJWA000	14	10.6	9
J30JZ/XLN15TJWA000	17.8	14.4	15
J30JZ/XLN21TJWA000	21.6	18.2	21
J30JZ/XLN25TJWA000	24.2	20.8	25
J30JZ/XLN31TJWA000	28	24.6	31
J30JZ/XLN37TJWA000	31.8	28.4	37
J30JZ/XLN51TJWA000	30.5	27.1	51
J30JZ/XLN66TJWA000	36.9	33.5	66

Optimum Size of PCB Aperture

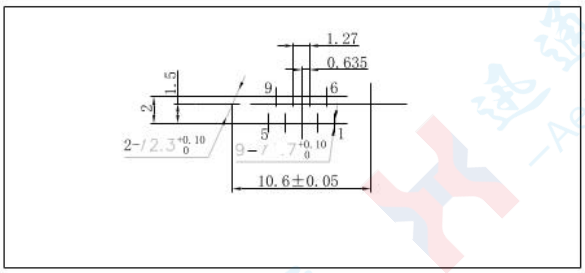

J30JZ/XLN9TJWA000

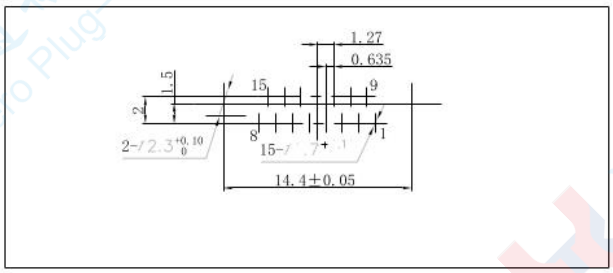

J30JZ/XLN15TJWA000

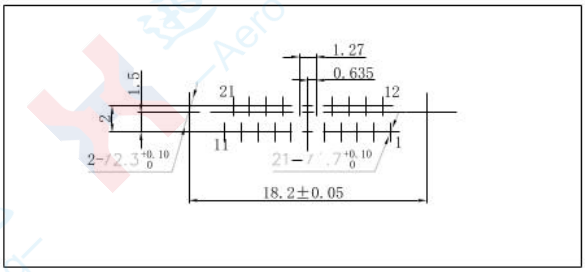

J30JZ/XLN21TJWA000

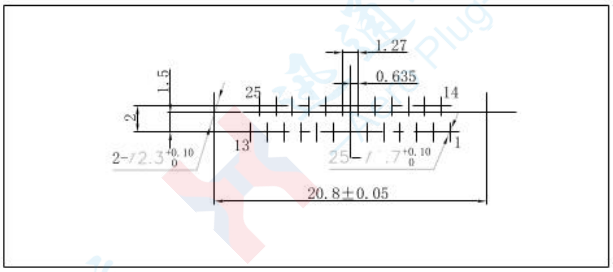

J30JZ/XLN25TJWA000

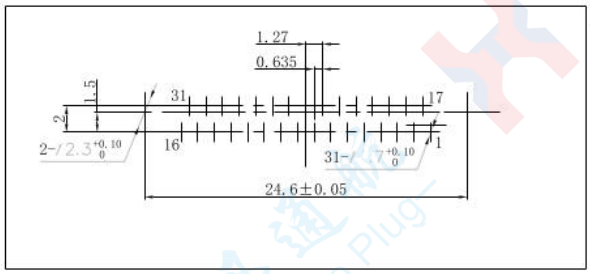

J30JZ/XLN31TJWA000

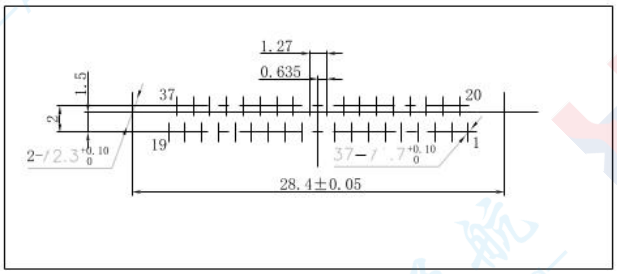

J30JZ/XLN37TJWA000

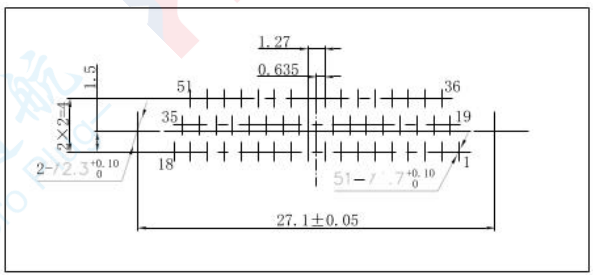

J30JZ/XLN51TJWA000

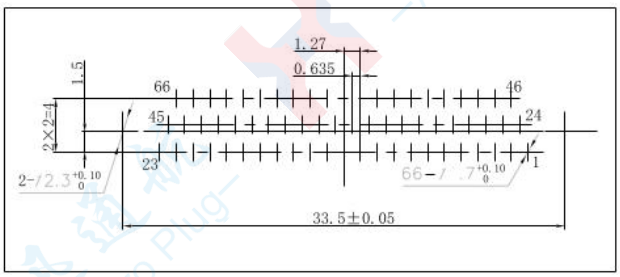

J30JZ/XLN66TJWA000

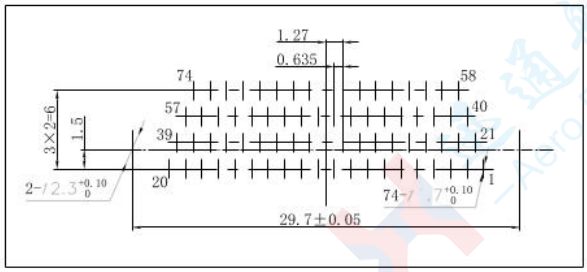

J30JZ/XLN74TJWA000

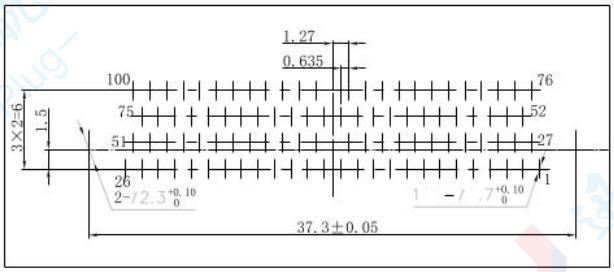

J30JZ/XLN100TJWA000

Socket J30JZ Straight Plug Type: J30JZLN□ZKWA000
Suitable for Printed Circuit Board (PCB) Thickness: 2mm (max); Grid Pitch (Pitch × Row Spacing): 1.27×2
Number of Cores： 9、15、21、25、31、37、51、66、74、100

Product Outline Drawing

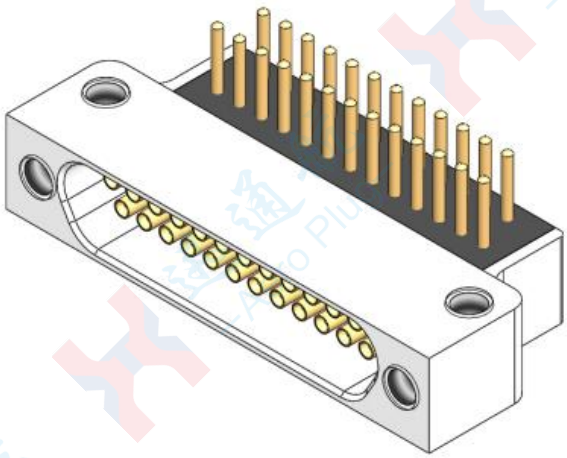

J30JZLN25ZKWA000

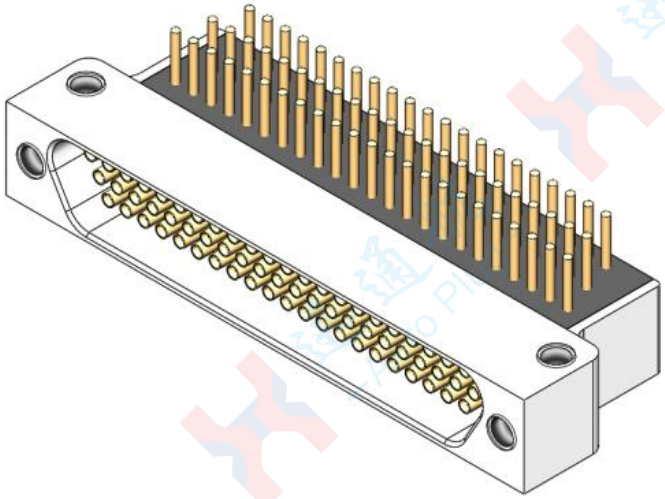

J30JZLN66ZKWA000

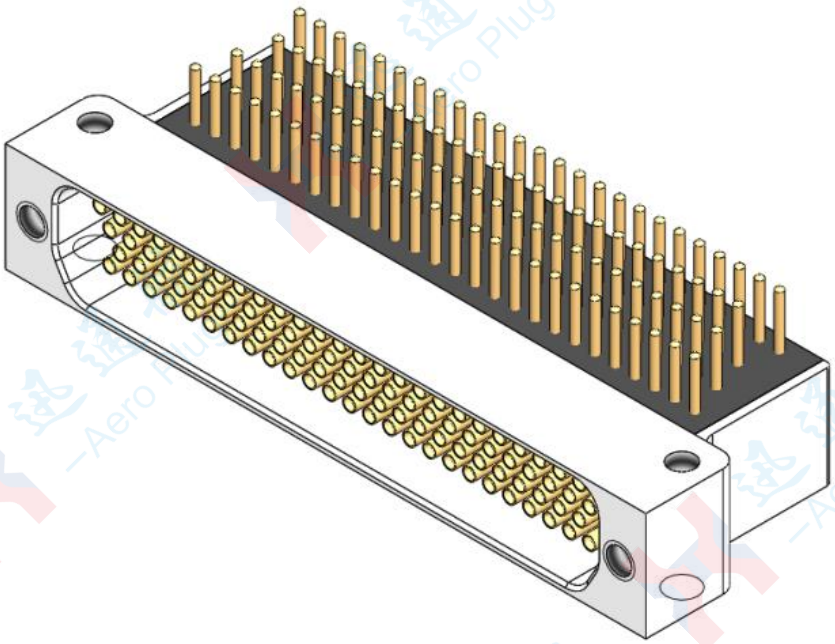

J30JZLN100ZKWA000

Product Outline Dimension Drawing

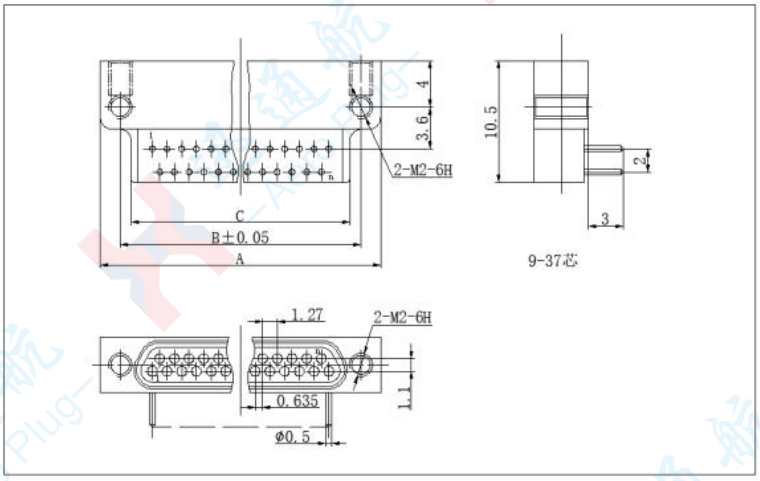

J30JZLN□ZKWA000(9、15、21、25、31、37)

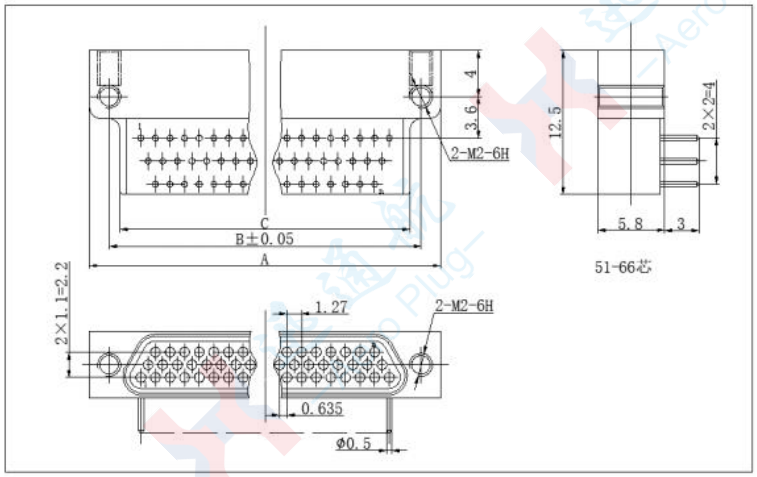

J30JZLN□ZKWA000(51、66)

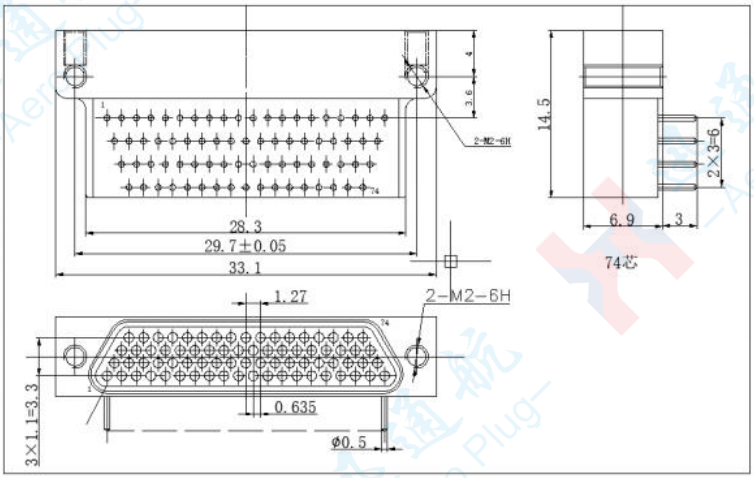

J30JZLN74ZKWA000

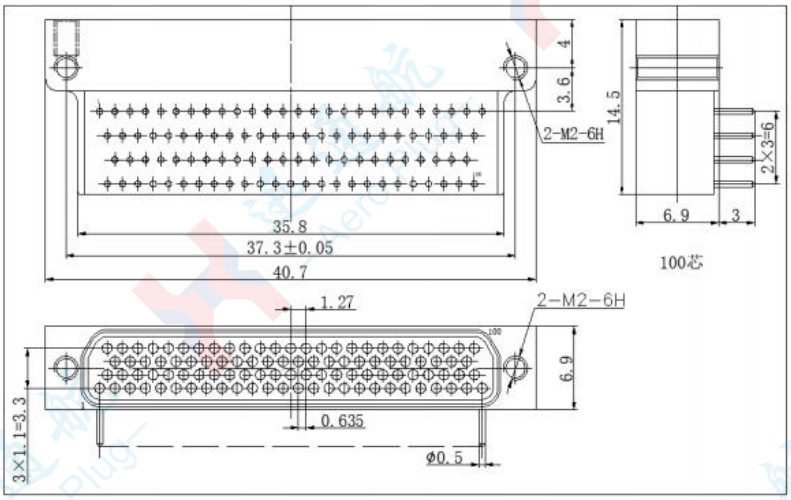

J30JZLN100ZKWA000

Order Mark	A	B
J30JZLN9ZKWA000	14	10.6
J30JZLN15ZKWA000	17.8	14.4
J30JZLN21ZKWA000	21.6	18.2
J30JZLN25ZKWA000	24.2	20.8
J30JZLN31ZKWA000	28	24.6
J30JZLN37ZKWA000	31.8	28.4
J30JZLN51ZKWA000	30.5	27.1
J30JZLN66ZKWA000	36.9	33.5

Optimum Size of PCB Aperture

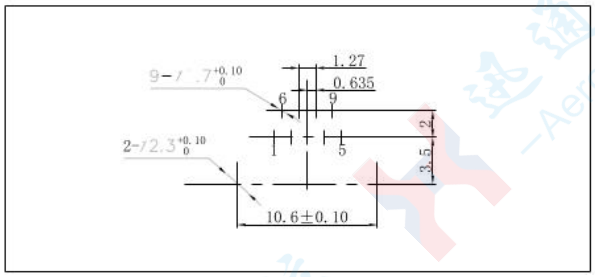

J30JZLN9ZKWA000

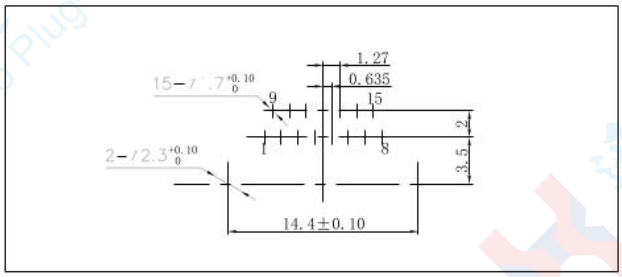

J30JZLN15ZKWA000

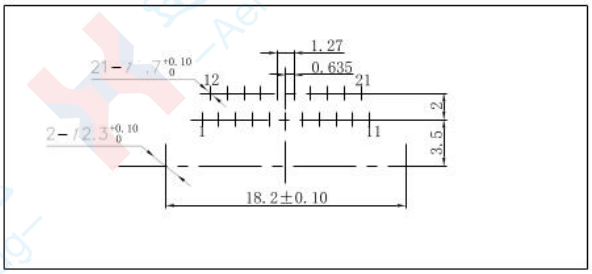

J30JZLN21ZKWA000

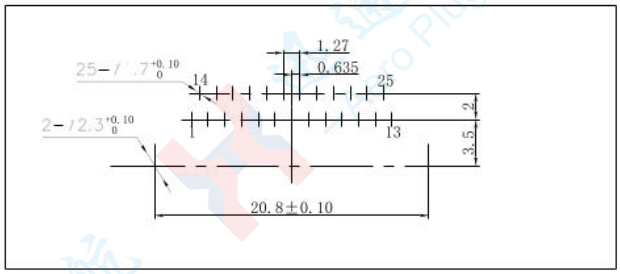

J30JZLN25ZKWA000

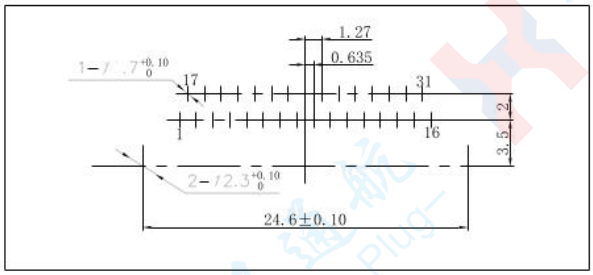

J30JZLN31ZKWA000

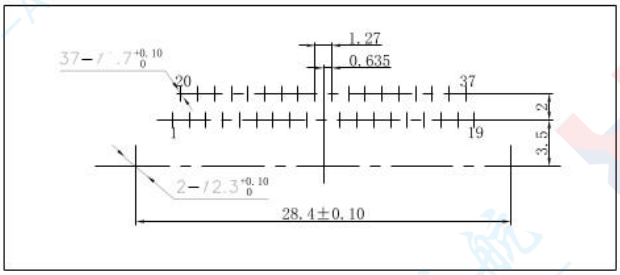

J30JZLN37ZKWA000

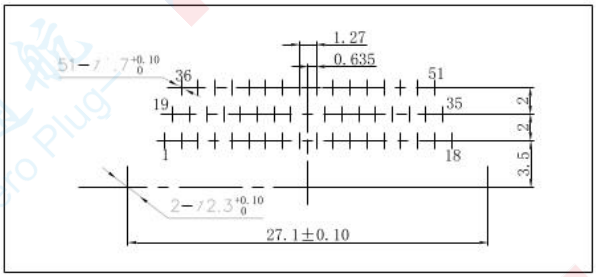

J30JZLN51ZKWA000

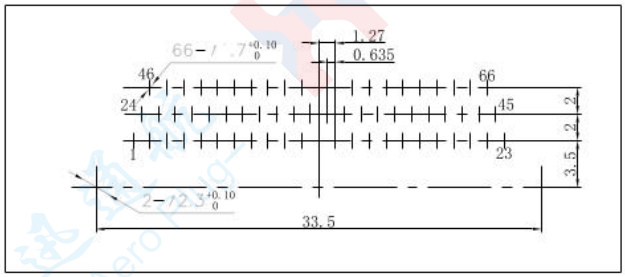

J30JZLN66ZKWA000

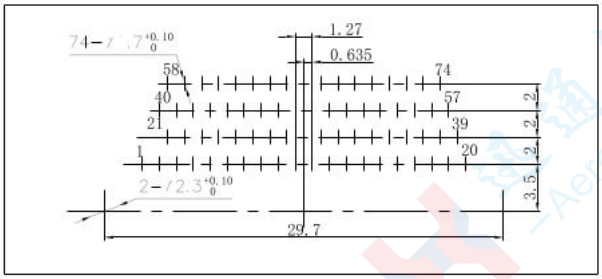

J30JZLN74ZKWA000

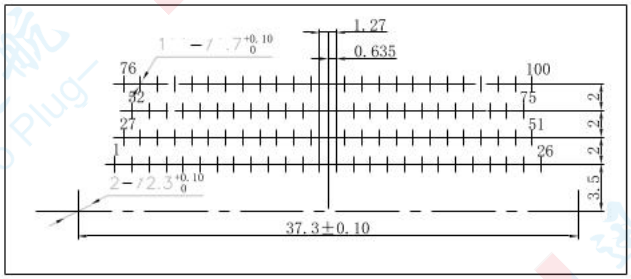

J30JZLN100ZKWA000

J30JZ Series Locking Component

Fixed-End Mounting Accessory

Mounting Accessories: J30J-P01, J30JZ-P02

This mounting accessory is suitable for the fixed installation of the J30JZ plug end. When drilling holes in the mounting plate, a counterbore with φ2.8 (min) and depth 0.5 (min) should be drilled on the mounting plate.

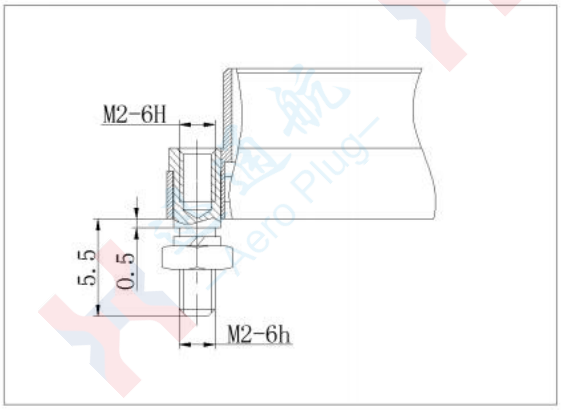

J30JZ-P01

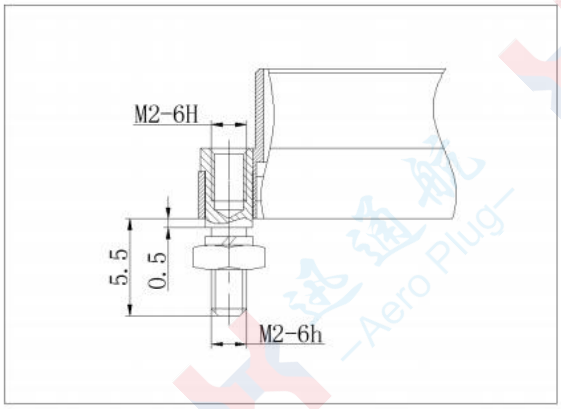

J30JZ-P02

Type P01 Locking Component: Maximum Mounting Plate Thickness: 2.5mm (max)

Type P02 Locking Component: Maximum Mounting Plate Thickness: 5mm (max)

Free-End Mounting Accessories

Mounting Accessories: J30JZ-L01, J30JZ-L02

The J30JZ-L01 Locking Component is only suitable for locking the J30JZ plug end, and the J30JZ-L02 Locking Component is only suitable for locking the socket end of J30JZPEN□ZKCA000.

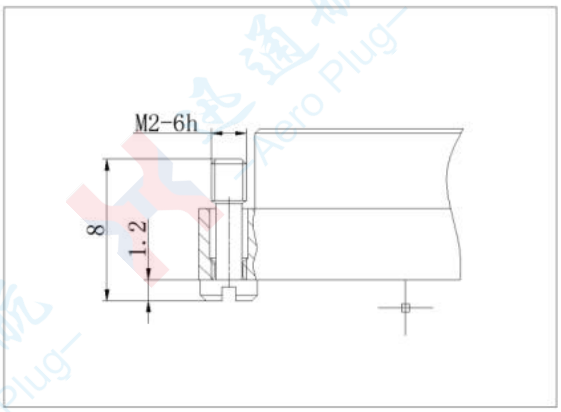

J30JZ-L01

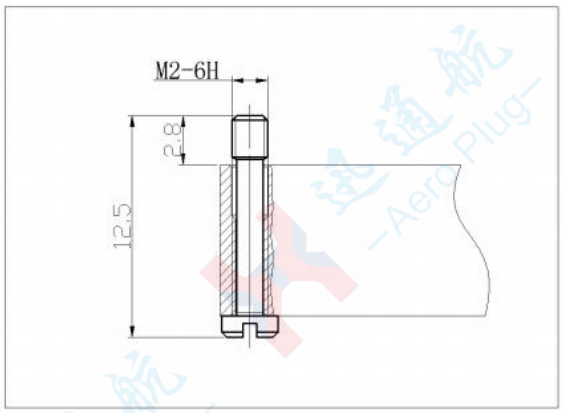

J30JZ-L02

J30JB Series Micro-Rectangular Electrical Connector

Product Features

- Nine contact configurations available: 5, 9, 11, 13, 15, 21, 25, 31, 37 contacts
- Adopts twisted wire contacts; contact pitch: 1.27mm, row spacing: 1.1mm
- Product Features: High density, miniaturization, high reliability
- Suitable wire cross-sectional area: 0.1mm² ~ 0.15mm²
- Product performance meets the requirements of GJB2446, equivalent to U.S. military standard MIL-DTL-83513
- Executive Standard: "Detailed Specification for J30J Series Micro-Rectangular Electrical Connectors"

Technical Characteristics

- Ambient Temperature: -55℃ ~ +125℃
- Vibration: 10Hz ~ 2000Hz 196m/s2
- Random Vibration: Power Spectral Density 0.4G²/Hz, Total Acceleration RMS 23.1G
- Shock: 735m/s² 11ms
- Rated Current: 3A
- Contact Resistance: ≤ 10mΩ
- Insulation Resistance: ≥ 5000MΩ 500VDC
- Dielectric Withstand Voltage: 600V
- Mechanical Life: 500 mating cycles

Type Spectrum Arrangement

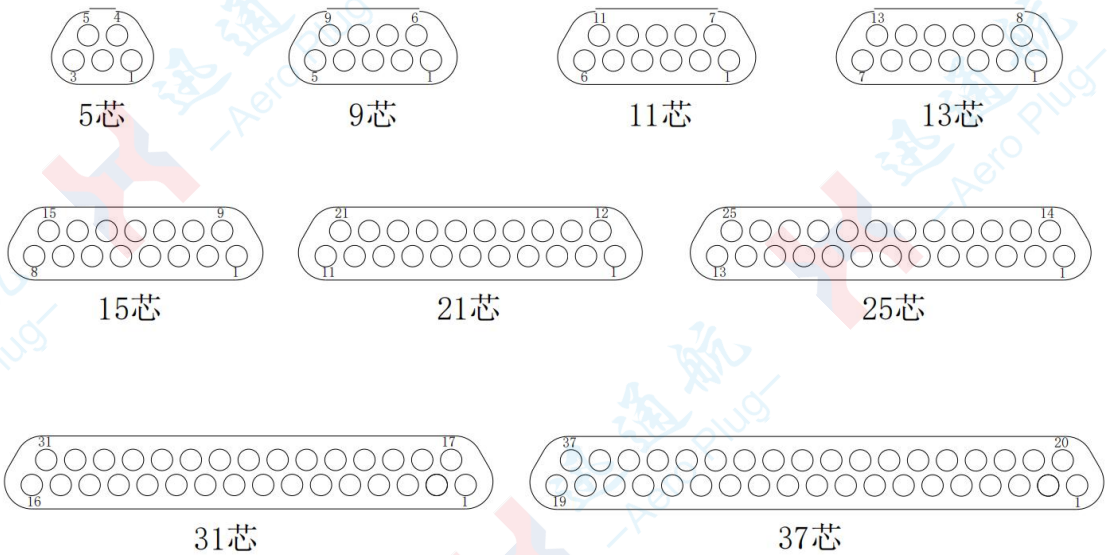

Note: Viewed from the mating end of the plug

Ordering Code

J30J X - X X X X
① ② ③ ④ ⑤ ⑥

①Main Designation:

②Series Modification: Not indicated - Aluminum shell, electroless nickel plating

B - Plug matched with glass sintering

③ Number of Contacts: 5、9、11、13、15、21、25、31、37

④ Contact Type: TJ - Pin installed on plug

⑤ Locking Component: L、L24、L60、L90、F

⑥ 系列代码: Q24、Q41、Q8、Q9、Q60A

Ordering Code Examples:

J30J-15TJ-Q24-1: This code indicates 15 contacts and is a modified product of the J30J series.

J30JB-9TJ-Q60A: This code indicates 9 contacts and the product is matched with a glass-sintered socket.

Product Stereogram

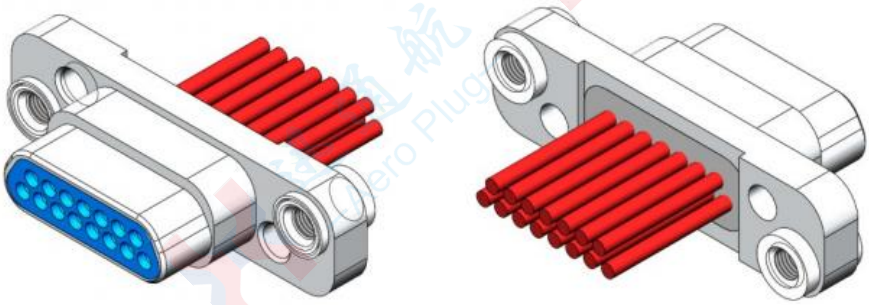

Product Model

Plug J30J-nTJ-Q24-1

Product Model Dimensional Drawing

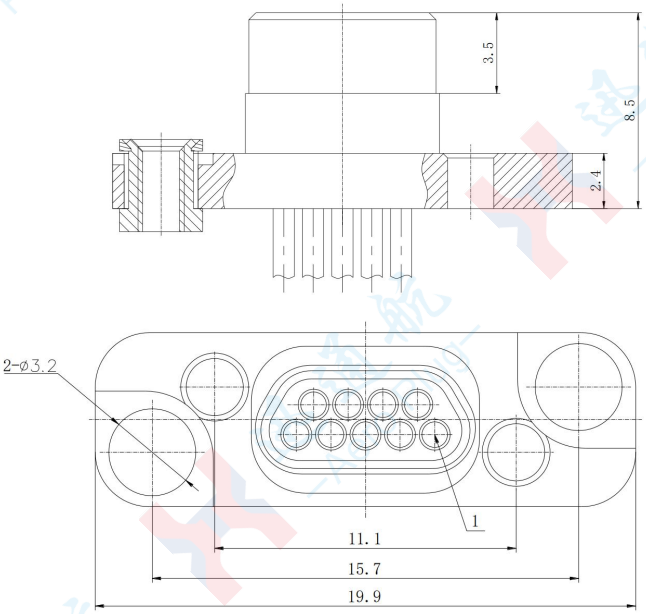

Figure 1: Outline Dimensions of J30J-9TJ-Q24-1

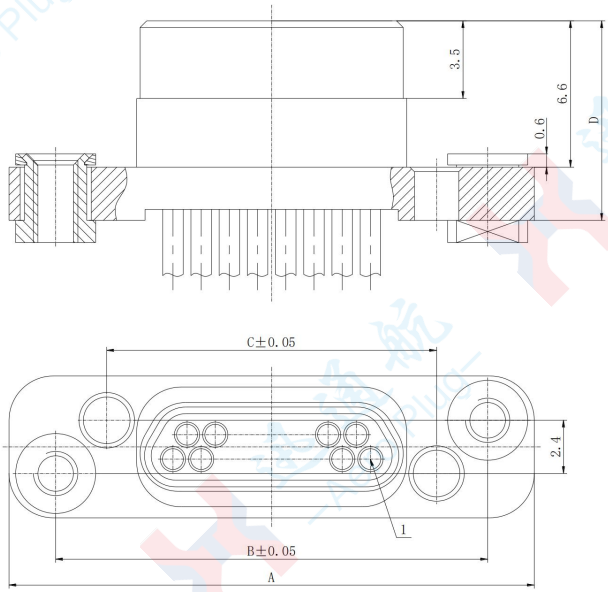

Product Model	A	B	C	D
J30J-15TJ-Q24-1	23.65	19.45	14.85	9
J30J-21TJ-Q24-1	27.5	23.3	18.7	8.5
J30J-25TJ-Q24-1	30	25.8	21.2	8.5
J30J-31TJ-Q24-1	33.8	29.6	25	8.5
J30J-37TJ-Q24-1	37.6	33.4	28.8	8.5

Recommended Mounting Hole Dimensions

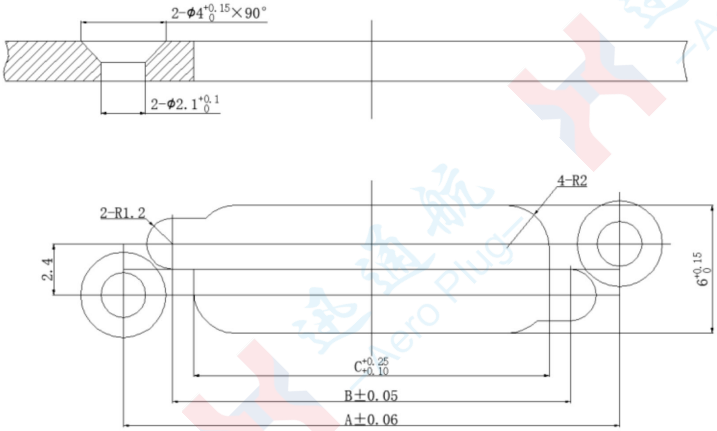

Product Model	A	B	C	Matched Socket Model
J30J-9TJ-Q24-1	15.7	11.1	9.1	J30JMI-9ZKHV9-Q6
J30J-15TJ-Q24-1	19.45	14.85	12.9	J30JMI-15ZKHV9-Q6
J30J-21TJ-Q24-1	23.3	18.7	16.7	J30JMI-21ZKHV9-Q6
J30J-25TJ-Q24-1	25.8	21.2	19.2	J30JMI-25ZKHV9-Q6
J30J-31TJ-Q24-1	29.6	25	23	J30JMI-31ZKHV9-Q6
J30J-37TJ-Q24-1	33.4	28.8	26.8	J30JMI-37ZKHV9-Q6

Product Stereogram

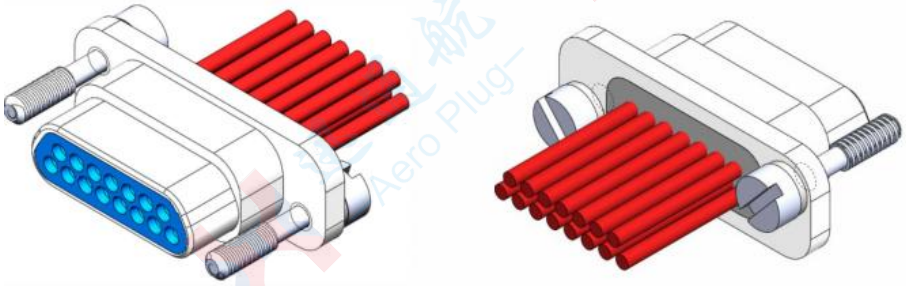

Product Model

Plug J30JB-nTJ-Q41/J30J-nTJ-Q24-2

Product Model Dimensional Drawing

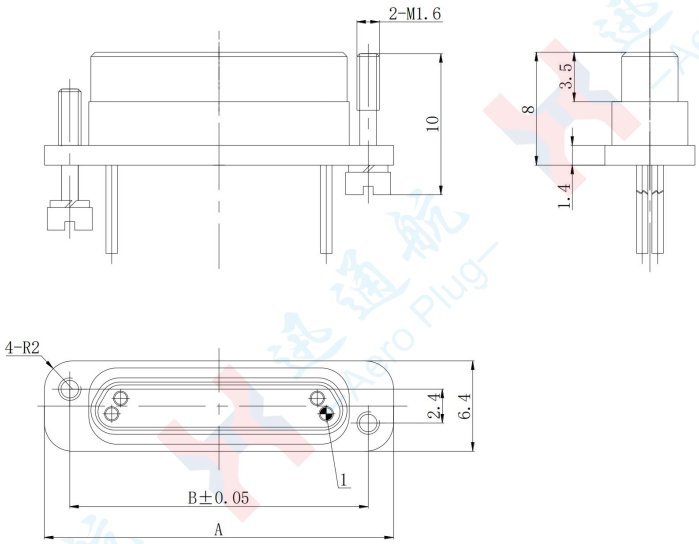

Product Model	A	B	Matched Socket Model
J30JB-9TJ-Q24-1 J30J-9TJ-Q24-2	14.7	11	J30JMI-9ZKH3-Q6
J30JB-15TJ-Q24-1 J30J-15TJ-Q24-2	18.45	14.85	J30JMI-15ZKH3-Q6
J30JB-21TJ-Q24-1 J30J-21TJ-Q24-2	22.3	18.7	J30JMI-21ZKH3-Q6
J30JB-25TJ-Q24-1 J30J-25TJ-Q24-2	24.8	21.2	J30JMI-25ZKH3-Q6
J30JB-31TJ-Q24-1 J30J-31TJ-Q24-2	28.6	25	J30JMI-31ZKH3-Q6
J30JB-37TJ-Q24-1 J30J-37TJ-Q24-2	32.4	28.8	J30JMI-37ZKH3-Q6

Product Stereogram

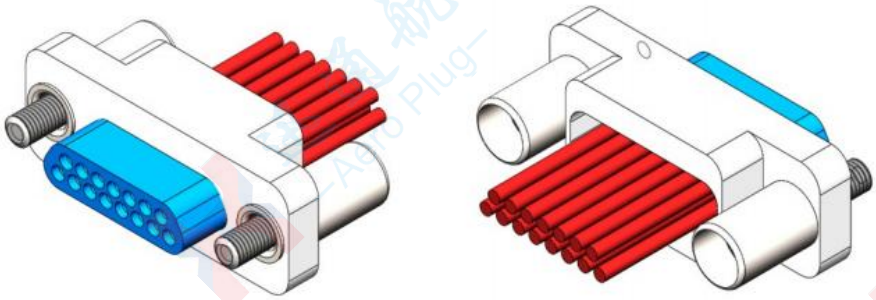

Product Model

Plug J30JB-nTJL

Product Model Dimensional Drawing

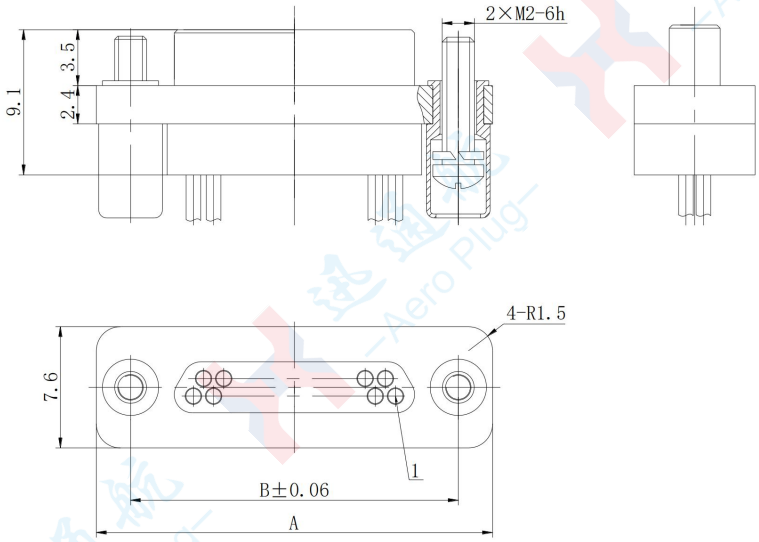

Product Model	A	B	Matched Socket Model	
J30JB-9TJL	17.3	13	J30JMI-9ZKH2-Q1	J30JMI-9ZKH2-Q2
J30JB-13TJL	19.6	15.5	J30JMI-15ZKH2-Q1	J30JMI-15ZKH2-Q2
J30JB-15TJL	21.1	16.8	J30JMI-15ZKH2-Q1	J30JMI-15ZKH2-Q2
J30JB-21TJL	24.8	20.6	J30JMI-21ZKH2-Q1	J30JMI-21ZKH2-Q2
J30JB-25TJL	27.4	23.1	J30JMI-25ZKH2-Q1	J30JMI-25ZKH2-Q2
J30JB-31TJL	31.2	26.9	J30JMI-31ZKH2-Q1	J30JMI-31ZKH2-Q2
J30JB-37TJL	35	30.7	J30JMI-37ZKH2-Q1	J30JMI-37ZKH2-Q2

Product Stereogram

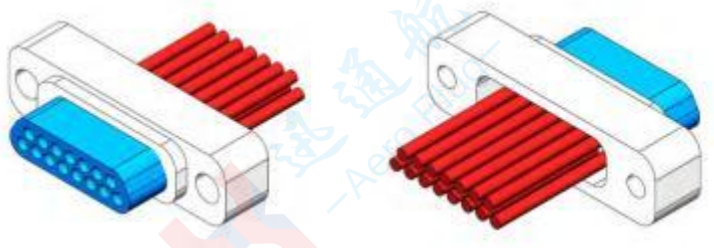

Product Model

Plug J30JB-nTJ-1/J30J-nTJ-Q60A

Product Model Dimensional Drawing

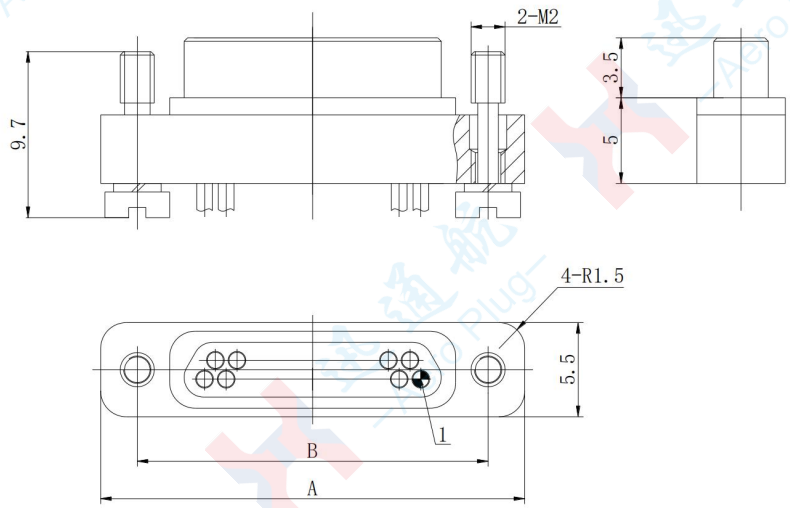

Product Model	A	B	Matched Socket Model
J30JB-9TJ-1 J30J-9TJ-Q60A	16.4	13	J30JMI-9ZKH-Q45A
J30JB-13TJ-1 J30J-13TJ-Q60A	18.9	15.5	J30JMI-13ZKH-Q45A
J30JB-15TJ-1 J30J-15TJ-Q60A	20.2	16.8	J30JMI-15ZKH-Q45A
J30JB-21TJ-1 J30J-21TJ-Q60A	24	20.6	J30JMI-21ZKH-Q45A
J30JB-25TJ-1 J30J-25TJ-Q60A	26.5	23.1	J30JMI-25ZKH-Q45A
J30JB-31TJ-1 J30J-31TJ-Q60A	30.3	26.9	J30JMI-31ZKH-Q45A
J30JB-37TJ-1 J30J-37TJ-Q60A	34.1	30.7	J30JMI-37ZKH-Q45A

Product Stereogram

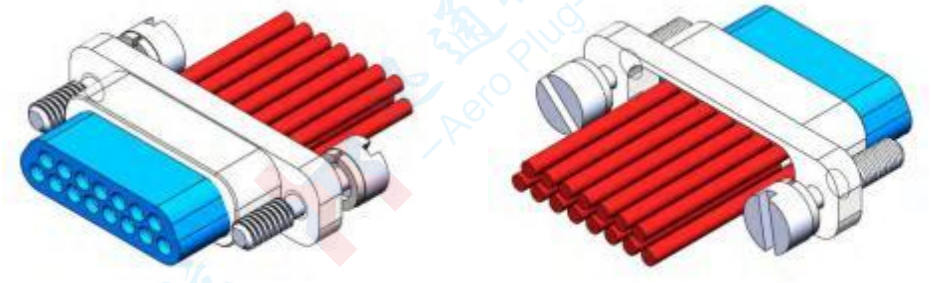

Product Model

Plug J30J-nTJL90-Q8

Product Model Dimensional Drawing

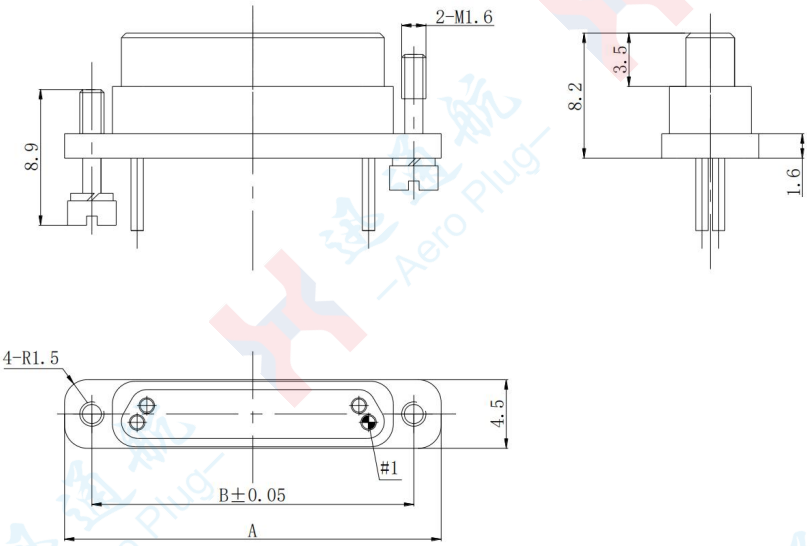

Product Model	A	B	Matched Socket Model
J30JB-5TJL90-Q8	11.2	7.9	J30JMI-5ZKH1-Q3
J30JB-9TJL90-Q8	13.7	10.44	J30JMI-9ZKH1-Q3
J30JB-11TJL90-Q8	15.8	12.5	J30JMI-11ZKH1-Q3
J30JB-13TJL90-Q8	17.3	13.9	J30JMI-13ZKH1-Q3
J30JB-15TJL90-Q8	17.5	14.25	J30JMI-15ZKH1-Q3
J30JB-21TJL90-Q8	21.3	18.06	J30JMI-21ZKH1-Q3
J30JB-25TJL90-Q8	24	20.6	J30JMI-25ZKH1-Q3
J30JB-31TJL90-Q8	27.7	24.4	J30JMI-31ZKH1-Q3
J30JB-37TJL90-Q8	31.5	28.2	J30JMI-37ZKH1-Q3

Product Stereogram

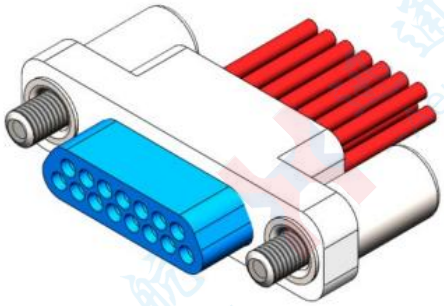

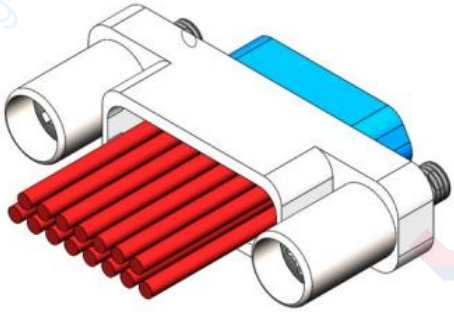

Product Model

Plug J30J-nTJL-Q9

Product Model Dimensional Drawing

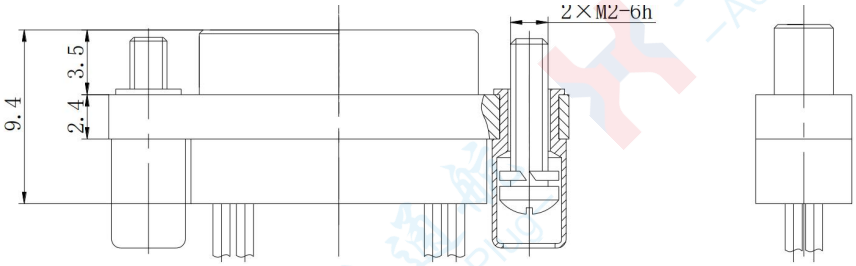

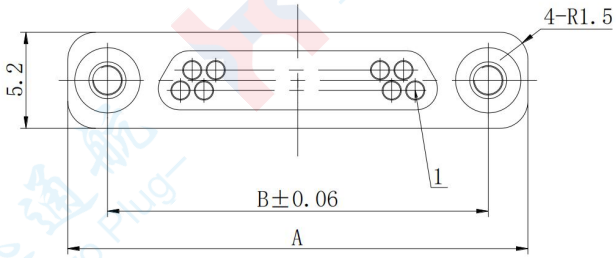

Product Model	A	B	Matched Socket Model	Matched Socket Model
J30JB-5TJL-Q9	14.7	10.4	J30JMI-5ZKH2-Q3	J30JMI-5ZKH1-Q3
J30JB-9TJL-Q9	17.3	13	J30JMI-9ZKH2-Q1	J30JMI-9ZKH2-Q2
J30JB-11TJL-Q9	18.6	14.3	J30JMI-11ZKH2-Q1	J30JMI-11ZKH2-Q2
J30JB-13TJL-Q9	19.6	15.5	J30JMI-13ZKH2-Q1	J30JMI-13ZKH2-Q2
J30JB-15TJL-Q9	21.1	16.8	J30JMI-15ZKH2-Q1	J30JMI-15ZKH2-Q2
J30JB-21TJL-Q9	24.8	20.6	J30JMI-21ZKH2-Q1	J30JMI-21ZKH2-Q2
J30JB-25TJL-Q9	27.4	23.1	J30JMI-25ZKH2-Q1	J30JMI-25ZKH2-Q2
J30JB-31TJL-Q9	31.2	26.9	J30JMI-31ZKH2-Q1	J30JMI-31ZKH2-Q2
J30JB-37TJL-Q9	35	30.7	J30JMI-37ZKH2-Q1	J30JMI-37ZKH2-Q2

J30JL Series Micro-Rectangular EMI Filter Connector

Product features

- Based on the internationally universal MIL-C-83513 series (GJB2446 series) micro-rectangular electrical connectors, filter characteristics and functions are added, enabling interconnection with standard J30J and MDM series products.
- The plug adopts twisted wire contacts with a pitch of 1.27mm; Product Features: High density, miniaturization, high reliability.
- Available contact configurations: 9, 15, 21, 25, 31, 37, 51.
- The filtering mechanism uses high-performance chip capacitors and magnetic sheets
- Low-pass filtering, effectively eliminating interference in the frequency range of 1MHz ~ 1GHz.
- Capacitor flexible termination technology eliminates internal stress caused by temperature shock, vibration, and impact, improving reliability.
- The overall dimensions are only extended at the cavity of the flange tail end compared with non-filter J30J products. Among them, the height of Type C increases by a maximum of 3.6mm, and the height of Type π increases by a maximum of 7.6mm.
- The locking component and tail end configuration are consistent with non-filter J30J products.
- Mainly used in high-end electronic instruments and equipment with miniaturization and electromagnetic compatibility requirements.
- Executive Standard: "Detailed Specification for J30JL Series Micro-Rectangular Filter Connectors".

Technical Characteristics

- Ambient Temperature: -55℃ ~ +125℃
- Vibration: 10Hz ~ 2000Hz 196m/s^2
- Shock: 980m/s^2
- Rated Current: 3A
- Operating Voltage: 200V DC (100V DC for 51-core version)
- Contact Resistance: ≤ 15mΩ
- Insulation Resistance: ≥ 5000MΩ (51 contact ≥ 2000MΩ) ≥ 5000MΩ (≥2000MΩ for 51-contact version)
- Dielectric Withstand Voltage: 500V DC (51 contact 300V DC)
- Attenuation Characteristics: 25℃ 50Ω test System; see Attenuation Characteristics Table for details.
- Mechanical Life: 500 mating cycles

Type Spectrum Arrangemen

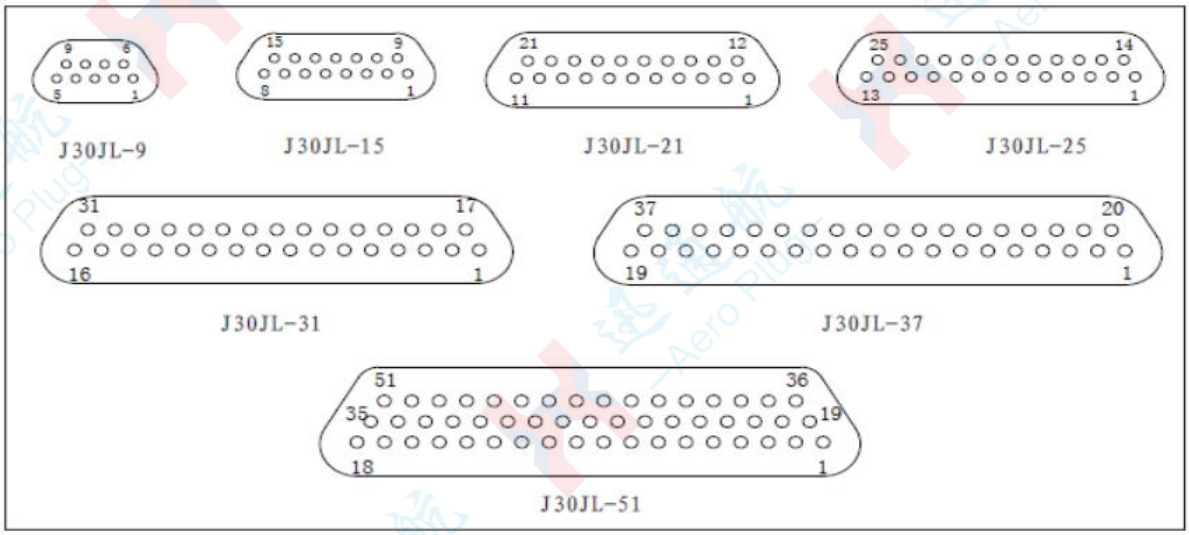

Note: Viewed from the mating end of the plug

Ordering Code

J30JL × - × TJ/ZK × - × × - × × - C × (Supplementary Notes)
① ② ③ ④ ⑤ ⑥ ⑦ ⑧ ⑨ ⑩

① Main Designation, L indicates filtering function

②Not indicated - Basic type ： S - Shell material: stainless steel with passivation treatment;
D - Mounting holes modified to M2-6H

③ Number of Contacts： 9、15、21、25、31、37、51

④ Connector & Contact Type:： TJ—Pin installed on plug;

ZK — Socket contact installed on receptacle； TJ and ZK are fixed matching pairs

⑤ Tail end form：No letter — Crimp type S — Solder type
N — Straight-through printed circuit board (PCB) type
W — Right-angle PCB type

⑥ Locking Component Category： See J30J Series Locking Components for details

⑦ Surface Coating：No letter — Shell with nickel plating G — Shell with cadmium plating

⑧ Basic Modification： Q — Shell flange widened
J — PCB grid spacing: 1.27×2.54 (column × row)

⑨ Filter Structur： C —C-type filtering P — Pi-type filtering

⑩Capacitance Code: e.g., 1, 2, 3, 4, 5; see Filter Attenuation Characteristics Table for details

Explanation:Supplementary notes are not part of the ordering code. When selecting products, customers should specify crimped wire specifications (such as conductor cross-sectional area, length, and color) in parentheses. For special wiring requirements, please provide the wiring diagram or connection relationship.

Attenuation Characteristics Table

Filter Circuit	Frequency Band Code	Capacitance Nominal Value (pF)		Recommended Capacitance Nominal Value	Minimum Attenuation (50 Test System, No Load)													
					25℃							-55℃~+125℃						
					Test Frequency (MHz)							Test Frequency (MHz)						
		min	max		1	3	10	30	100	300	1000	1	3	10	30	100	300	1000
Type C	1	100	200	100,150,220					3	10	20					2	8	17
	2	300	510	330,470				3	10	18	25				2	10	17	27
	3	680	1000	680,820,1000			1	6	17	26	30				4	15	23	27
	4	1200	2200	1500			2	10	20	30	35				8	18	23	30
	5	4000	5600	4700		2	8	18	28	35	35			5	16	24	30	30
π-type	1	200	440	200,300,440				2	5	22	30					3	19	27
	2	600	1020	660,940			2	8	18	30	40					16	24	35
	3	1360	2000	1360,1640,2000			4	10	22	35	42				2	19	30	36
	4	2400	4400	3000		2	8	18	35	45	50				5	30	40	42
	5	6000	11200	9400	2	4	15	25	40	48	50			2	11	35	40	42

J30JL Crimping Basic Type/J30JL-TJ and J30JL-ZK

- Plug
- J30JL-9、15、21、25、31、37、51TJ

- Socket
- J30JL-9、15、21、25、31、37、51ZK

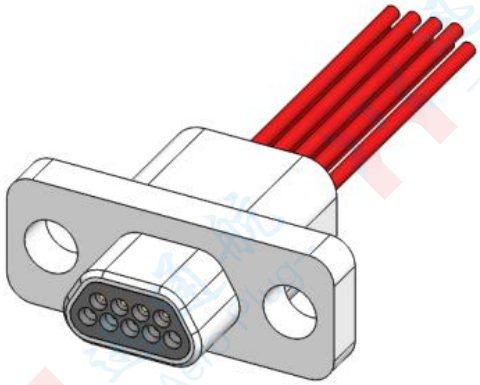

J30JL-9TJ

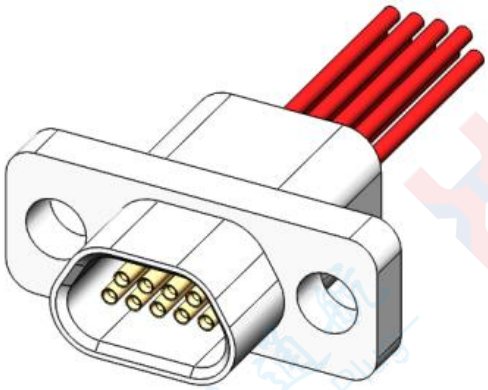

J30JL-9ZK

Product Outline Dimension Drawing (with Comparison Diagram)

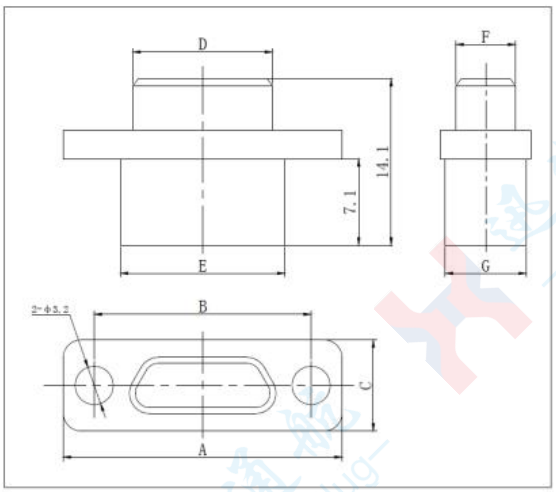

J30JL-TJ（C-type Filtering Products）

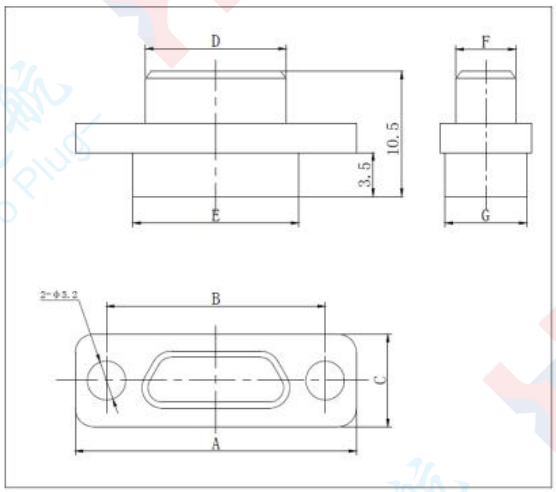

J30J-TJ（Non-filtering Products）

Product Outline Dimension Drawing (with Comparison Diagram)

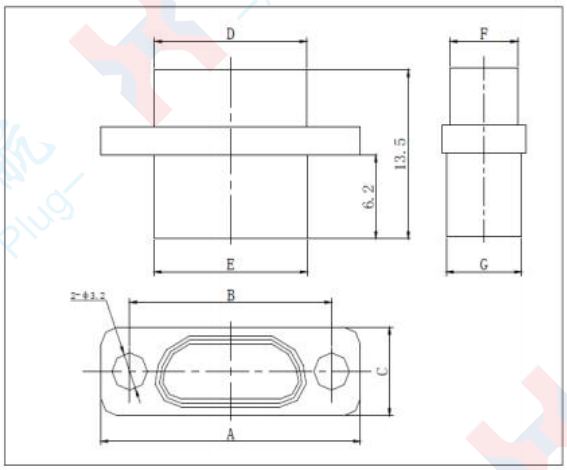

J30JL-ZK（C-type Filtering Products）

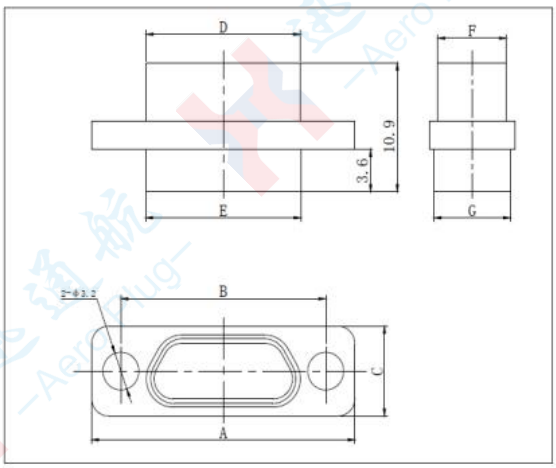

J30J-ZK（Non-filtering Products）

Order Mark	A	B	C	D	E	F	G
J30JL-9TJ	19.6	14.3	7.6	8.3	9.9	4.7	6.8
J30JL-15TJ	23.5	18.2	7.6	12.3	13.8	4.7	6.8
J30JL-21TJ	27.4	22	7.6	16	17.6	4.7	6.8
J30JL-25TJ	29.8	24.5	7.6	18.6	20.2	4.7	6.8
J30JL-31TJ	33.6	28.3	7.6	22.4	24	4.7	6.8
J30JL-37TJ	37.4	32.2	7.6	26.3	27.8	4.7	6.8
J30JL-9ZK	19.6	14.3	7.6	9.8	9.9	6.1	6.8
J30JL-15ZK	23.5	18.2	7.6	13.7	13.8	6.1	6.8
J30JL-21ZK	27.4	22	7.6	17.4	17.6	6.1	6.8
J30JL-25ZK	29.8	24.5	7.6	20	20.2	6.1	6.8
J30JL-31ZK	33.6	28.3	7.6	23.8	24	6.1	6.8
J30JL-37ZK	37.4	32.2	7.6	27.7	27.8	6.1	6.8
J30JL-51ZK	36.4	30.86	8.7	26.5	26.6	7.2	7.9

Outline Drawing of Mated Products

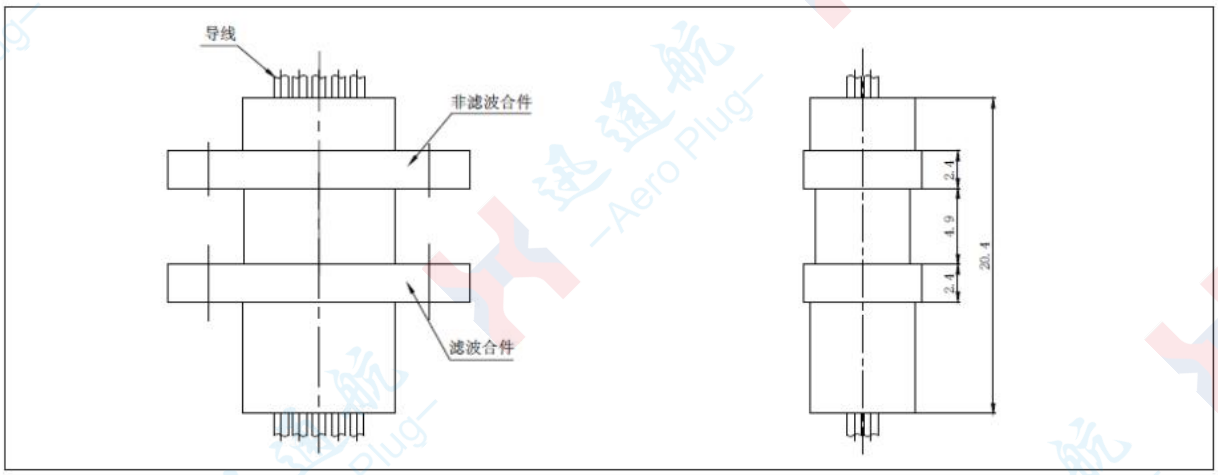

Front View

Left View

J30JL Insertable Printed Circuit Board (Basic Type) \ J30JL Through-Hole Printed Circuit Board (Type N)

- The contact tail adopts a through-hole connection to the printed circuit board, with a grid size of 2.54×2.54 mm.

- Plug
- J30JL-9、15、21、25、31、37、51TJN

- Socket
- J30JL-9、15、21、25、31、37、51ZKN

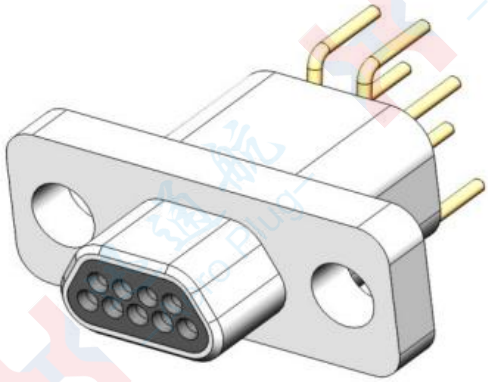

J30JL-9TJN

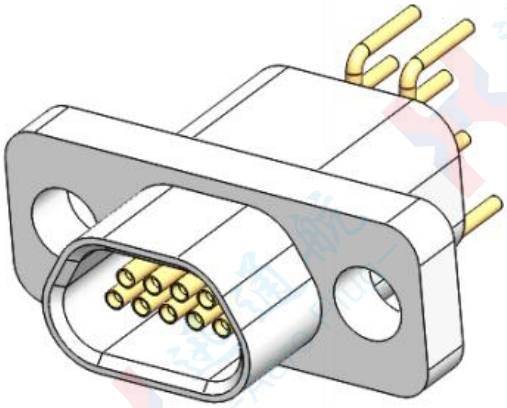

J30JL-9ZKN

Outline Drawing of Mated Products

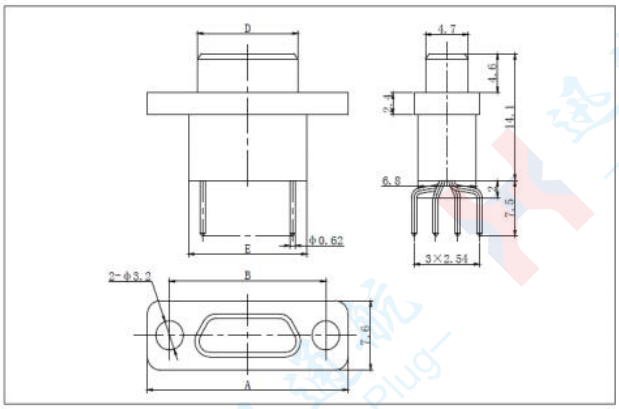

J30JL-9～37TJN

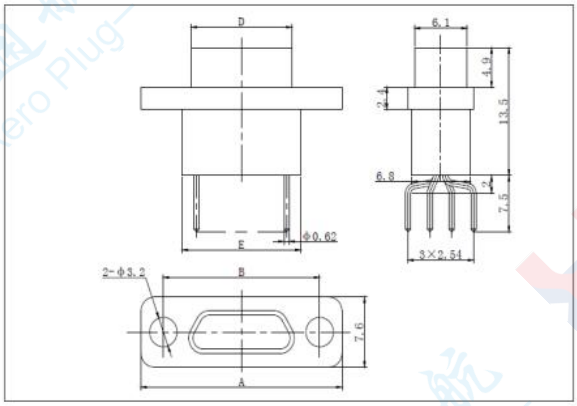

J30JL-9～37ZKN

Order Mark	A	B	D		E
J30JL-9TJN/ ZKN	19.6	14.3	8.3 (TJN)	9.8 (ZKN)	9.9
J30JL-15TJN/ ZKN	23.5	18.2	12.3 (TJN)	13.7 (ZKN)	13.8
J30JL-21TJN/ ZKN	27.4	22	16 (TJN)	17.4 (ZKN)	17.6
J30JL-25TJN/ ZKN	29.8	24.5	18.6 (TJN)	20 (ZKN)	20.2
J30JL-31TJN/ ZKN	33.6	28.3	22.4 (TJN)	23.8 (ZKN)	24
J30JL-37TJN/ ZKN	37.4	32.2	26.3 (TJN)	27.7 (ZKN)	27.8
J30JL-51TJN/ ZKN	36.4	30.86	25 (TJN)	26.5 (ZKN)	26.6

J30JL Insertable Printed Circuit Board (Basic Type) \ J30JL Right-Angle Insertable Printed Circuit Board (Type W)

- The contact tail adopts a right-angle through-hole connection to the printed circuit board, with a grid size of 2.54×2.54 mm.

- Plug
- J30JL-9、15、21、25、31、37、51TJW

- Socket
- J30JL-9、15、21、25、31、37、51ZKW

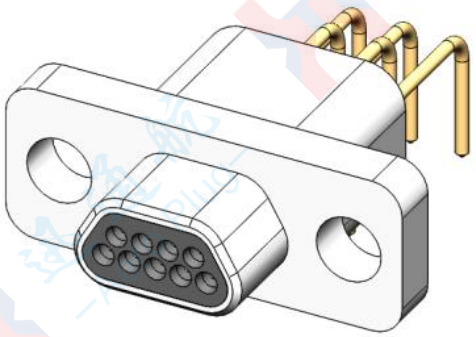

J30JL-9TJW

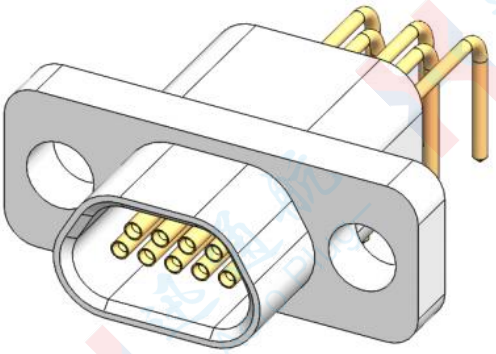

J30JL-9ZKW

Outline Drawing of Product Dimensions

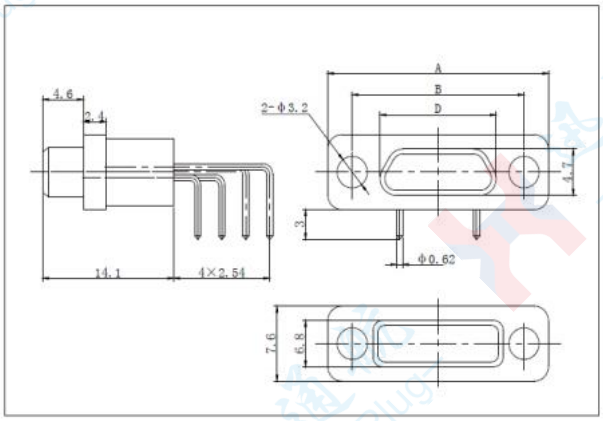

J30JL-9～37TJW

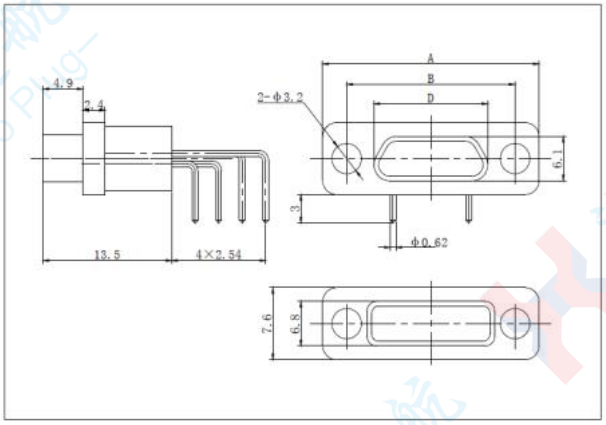

J30JL-9～37ZKW

Order Mark	A	B	D		E
J30JL-9TJW/ZKW	19.6	14.3	8.3 (TJW)	9.8 (ZKW)	9.9
J30JL-15TJW/ZKW	23.5	18.2	12.3 (TJW)	13.7 (ZKW)	13.8
J30JL-21TJW/ZKW	27.4	22	16 (TJW)	17.4 (ZKW)	17.6
J30JL-25TJW/ZKW	29.8	24.5	18.6 (TJW)	20 (ZKW)	20.2
J30JL-31TJW/ZKW	33.6	28.3	22.4 (TJW)	23.8 (ZKW)	24
J30JL-37TJW/ZKW	37.4	32.2	26.3 (TJW)	27.7 (ZKW)	27.8
J30JL-51TJW/ZKW	36.4	30.86	25 (TJW)	26.5 (ZKW)	26.6

J30JL Welded Basic Type\J30JL-TJS＆J30JL-ZKS

- Basic Type Welded Products with Tail End Arrangement Pitch of 1.27×1.1 (Column × Row)
- Plug
- J30JL-9、15、21、25、31、37、51TJS
- Socket
- J30JL-9、15、21、25、31、37、51ZKS

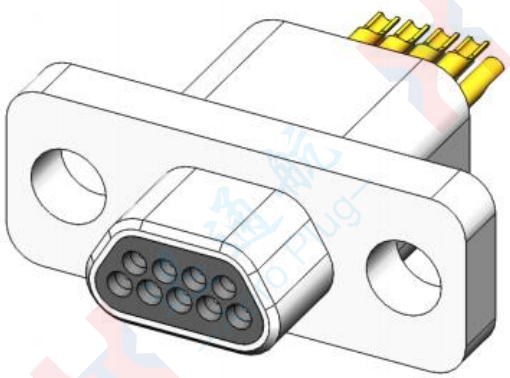

J30JL-9ZKS

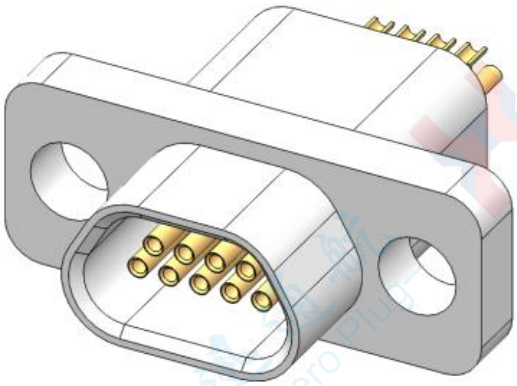

J30JL-9ZKS

Note: For clarity of the view, the A3-type cable clip assembly integrated with the plug (socket) assembly is omitted from the three-dimensional diagram above. Essentially, all J30JL-TJS/ZKS series welded plug (socket) models are furnished with the A3-type cable clip assembly as standard configuration. Accordingly, the complete three-dimensional diagram is presented below (taking J30JL-25ZKS as a representative example; the cable clip assemblies for all other models are mounted on the plug (socket) in accordance with this identical installation method).

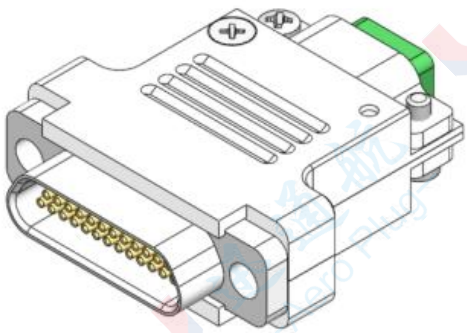

3D View from the Mating End

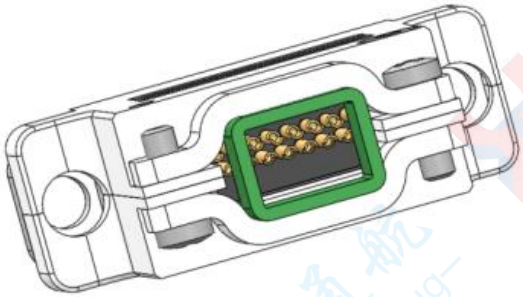

3D View from the Cable Clip Tail End

Outline Drawing of Product Dimensions

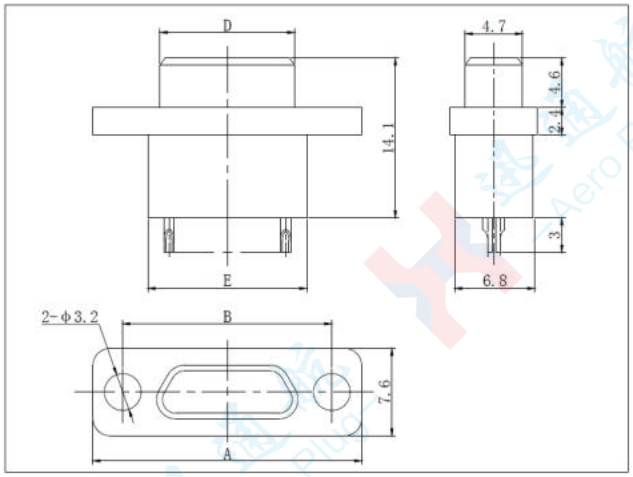

J30JL-9～37TJS

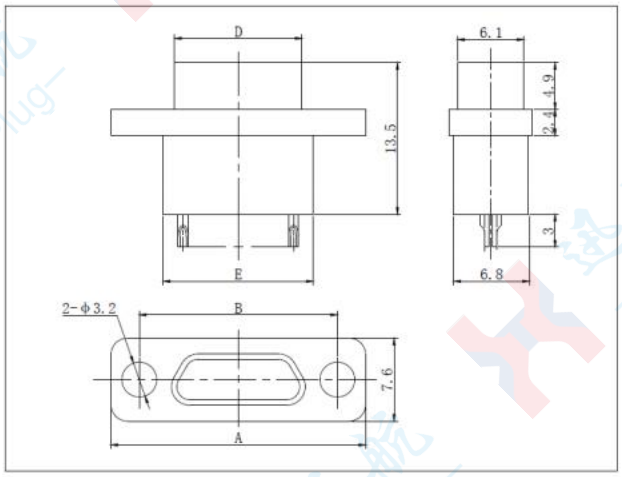

J30JL-9～37ZKS

Order Mark	A	B	D		E
J30JL-9TJS/ZKS	19.6	14.3	8.3(TJS)	9.8(ZKS)	9.9
J30JL-15TJS/ZKS	23.5	18.2	12.3(TJS)	13.7(ZKS)	13.8
J30JL-21TJS/ZKS	27.4	22	16(TJS)	17.4(ZKS)	17.6
J30JL-25TJS/ZKS	29.8	24.5	18.6(TJS)	20(ZKS)	20.2
J30JL-31TJS/ZKS	33.6	28.3	22.4(TJS)	23.8(ZKS)	24
J30JL-37TJS/ZKS	37.4	32.2	26.3(TJS)	27.7(ZKS)	27.8
J30JL-51TJS/ZKS	36.4	30.86	25(TJS)	26.5(ZKS)	26.6

J30JL-TJ/ZK Mounting Plate Hole Dimension Drawing

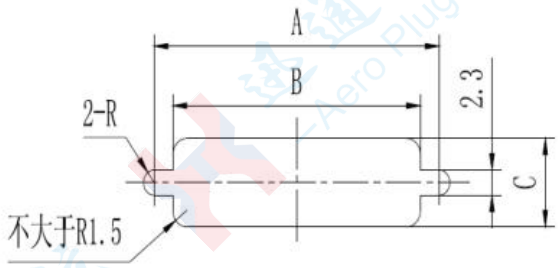

Front Panel Mounting Hole Dimensions

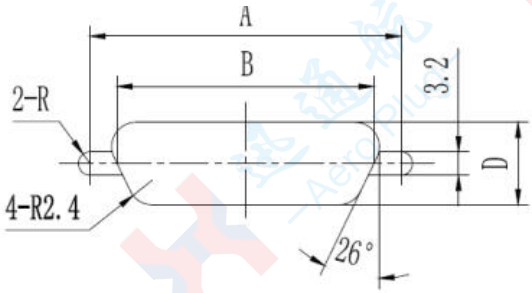

Rear Panel Mounting Hole Dimensions

Series Spectrum	A	B	C	D	Series Spectrum	A	B	C	D
9-Core	14.3	10.2	7	6.3	25-Core	24.5	20.5	7	6.3
15-Core	18.2	14.1	7	6.3	31-Core	28.3	24.3	7	6.3
21-Core	22	17.9	7	6.3	37-Core	32.2	28.1	7	6.3
51-Core	30.86	26.9	8.1	7.4					

Mounting Hole Dimensions for J30JL—nTJN/nZKN PCB Mounting

- J30JL-9TJN

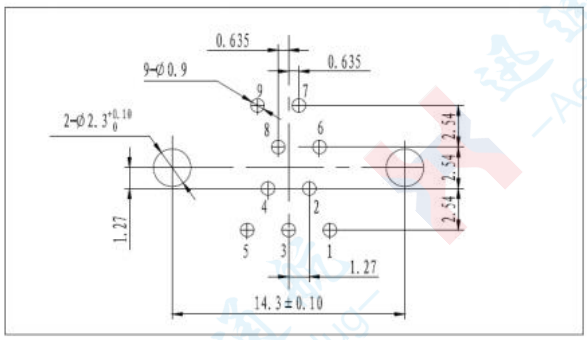

- J30JL-9ZKN

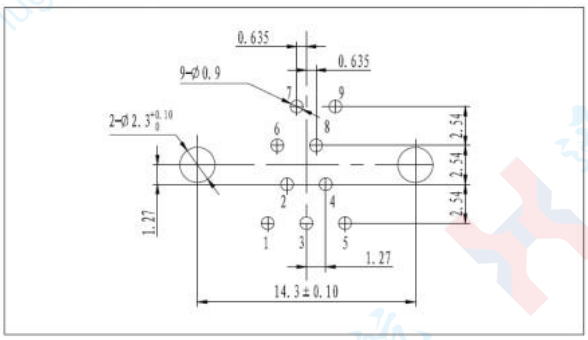

- J30JL-15TJN

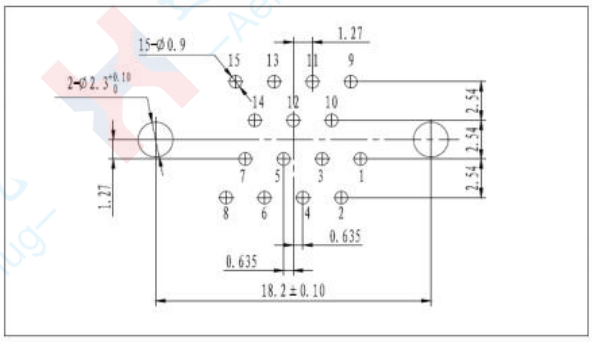

- J30JL-15ZKN

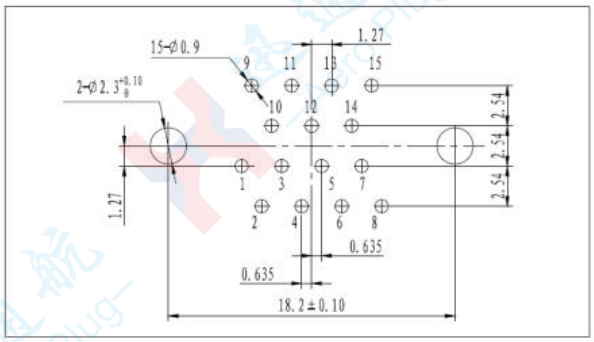

- J30JL-21TJN

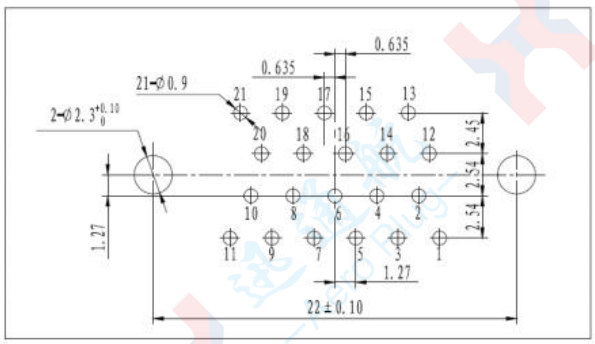

- J30JL-21ZKN

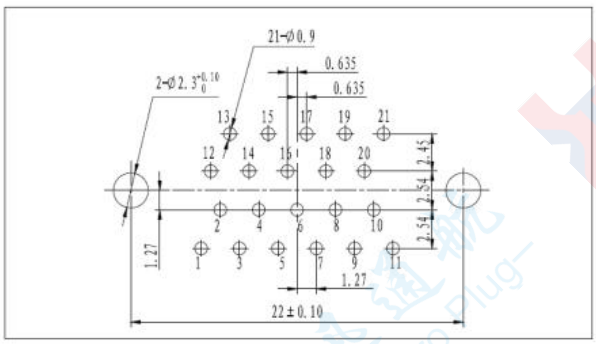

- J30JL-25TJN

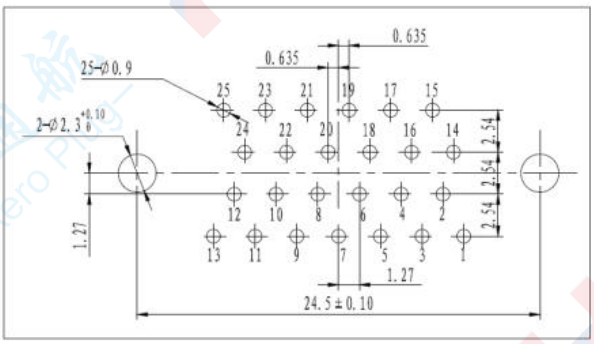

- J30JL-25ZKN

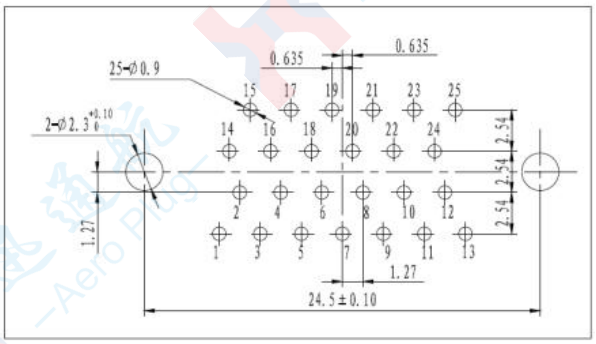

- J30JL-31TJN

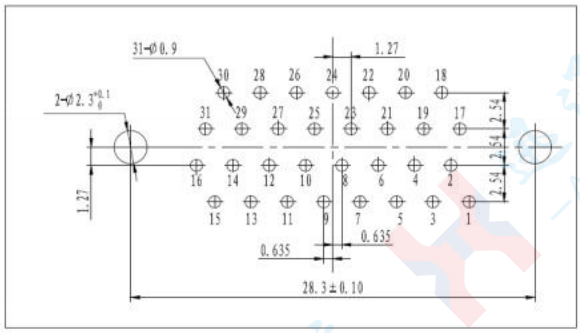

- J30JL-31ZKN

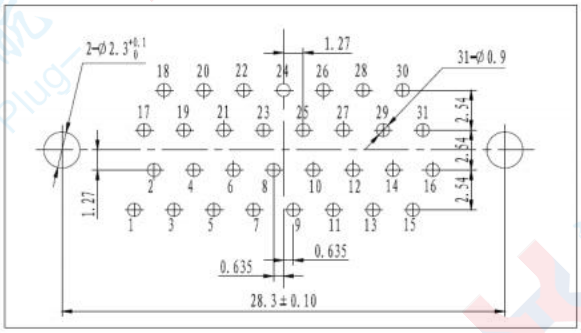

- J30JL-37TJN

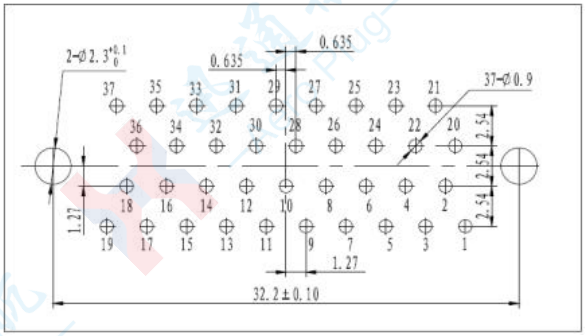

- J30JL-37ZKN

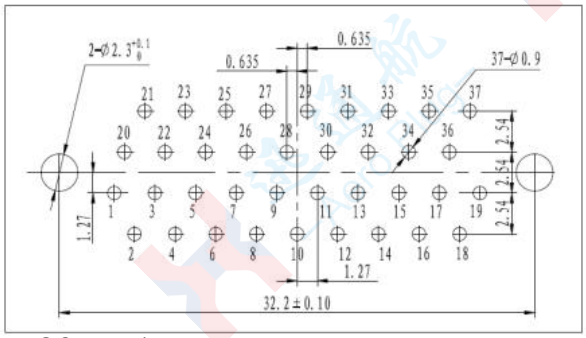

- J30JL-51TJN

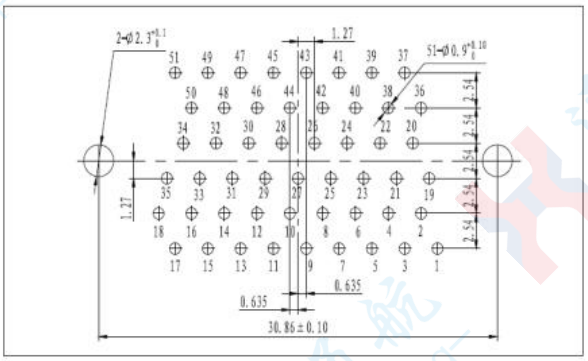

- J30JL-51ZKN

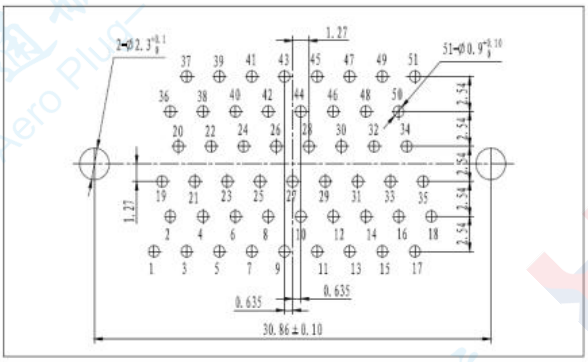

J30JL-nTJW/nZKW PCB Mounting Hole Dimensions

■ J30JL-9TJW

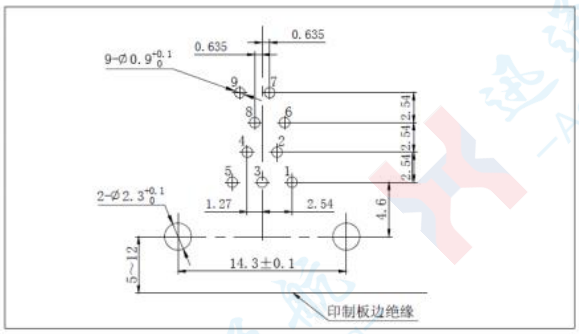

■ J30JL-9ZKW

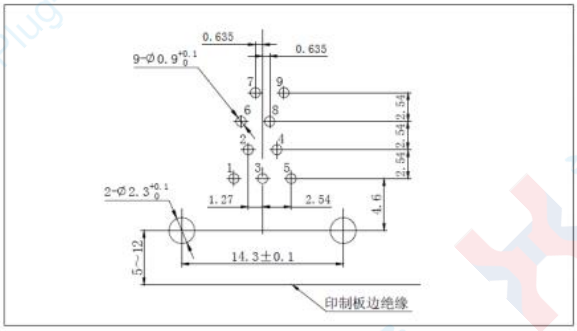

■ J30JL-15TJW

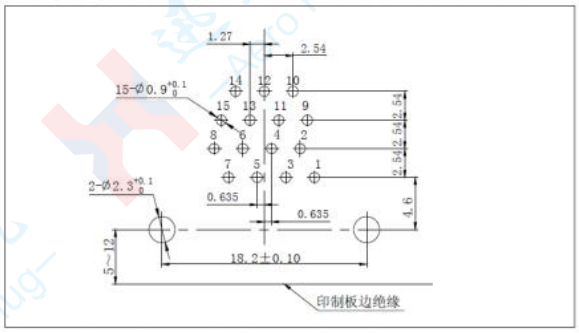

■ J30JL-15ZKW

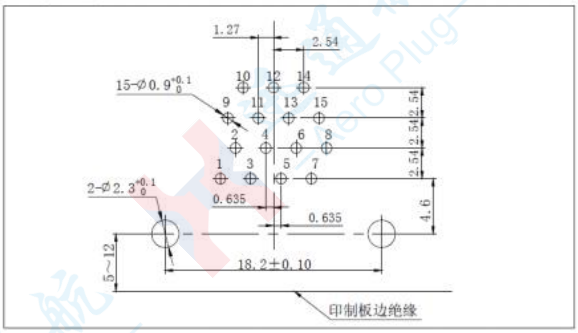

■ J30JL-21TJW

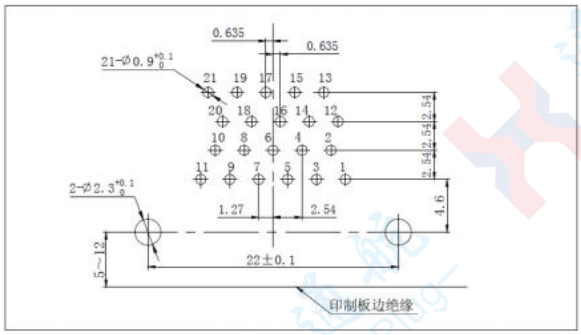

■ J30JL-21ZKW

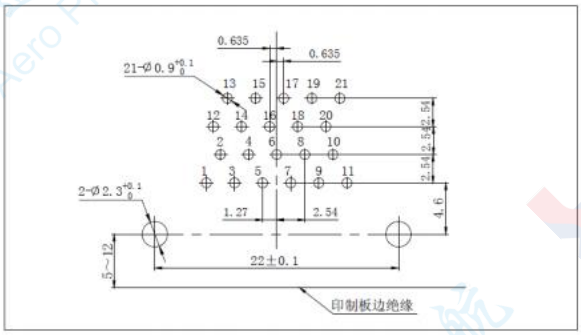

■ J30JL-25TJW

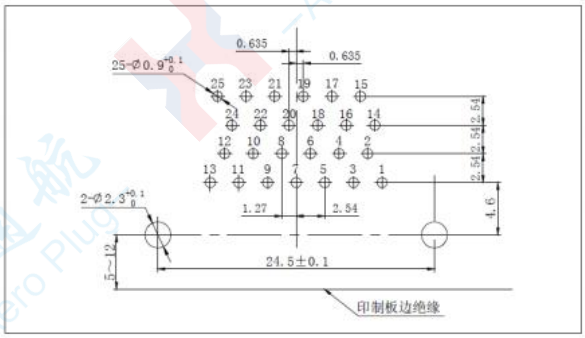

■ J30JL-25ZKW

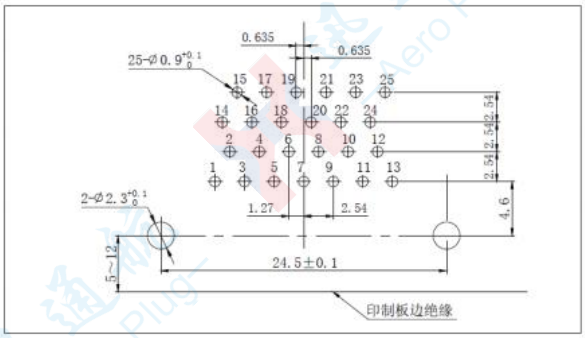

- J30JL-31TJW

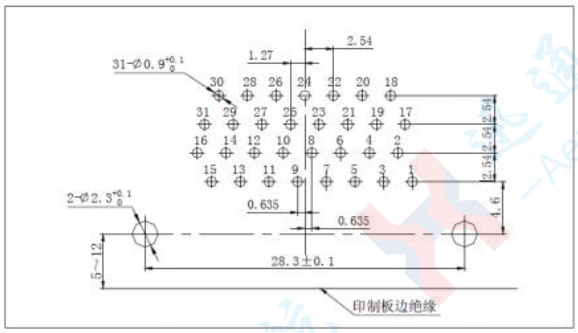

- J30JL-31ZKW

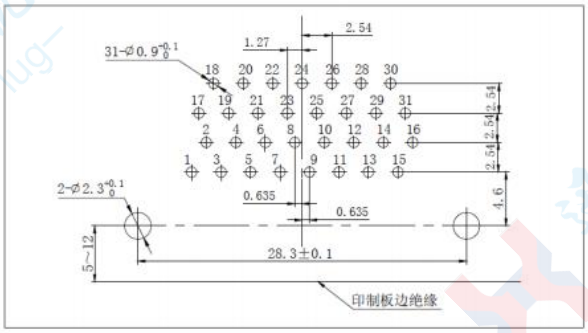

- J30JL-37TJW

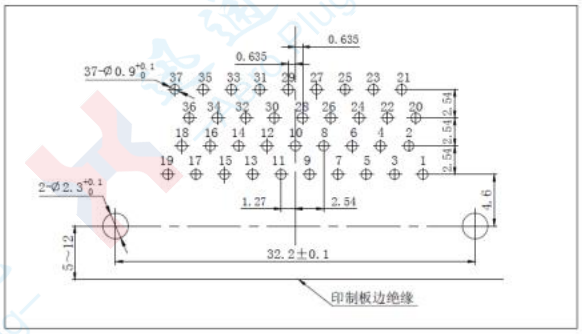

- J30JL-37KW

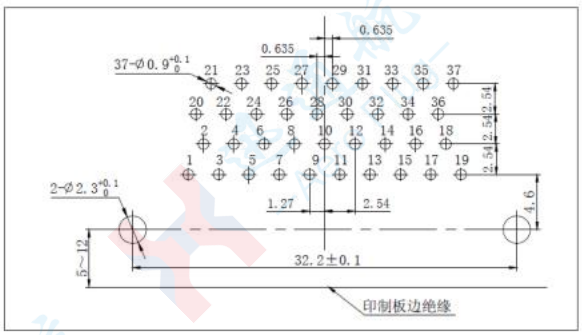

- J30JL-51TJW

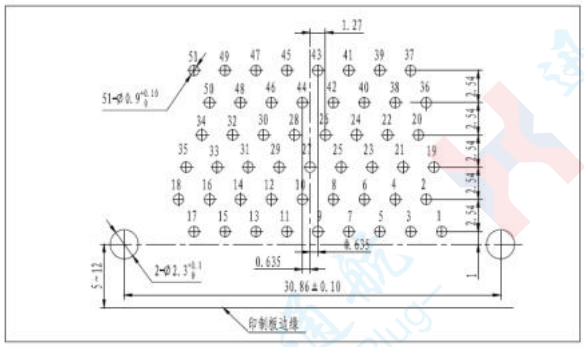

- J30JL-51KW

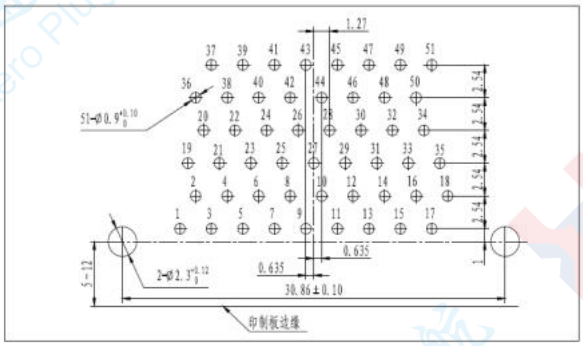

HJ30J Series High-Speed Transmission Micro-Rectangular Electrical Connector

Product Features

- Male contacts adopt elastic stranded pins
- High-density contact points with a pitch of 1.27mm×1.27mm
- Equipped with a metal shielded housing
- Available in 7 specifications: 12, 18, 24, 30, 36, 55, and 100
- Executive Standard: Detailed Specification for HJ30J Series High-Speed Transmission Micro-Rectangular Electrical Connectors

Technical Characteristics

- Ambient Temperature: -55℃ ~ +125℃
- Vibration: 10Hz ~ 2000Hz 196m/s^2
- Shock: 735m/s^2
- Acceleration: 735m/s^2
- Rated Current: 3A
- Dielectric Withstand Voltage: 800V (ambient temperature)
- Contact Resistance: ≤ 20mΩ
- Insulation Resistance: ≥5000MΩ (500VDC); ≥100MΩ under damp heat conditions
- Mechanical Life: 500 mating cycles
- Characteristic Impedance: 100±15Ω
- Near-End Crosstalk (NEXT): ≥30dB within 100ps
- Transmission Rate: 1.65Gbps

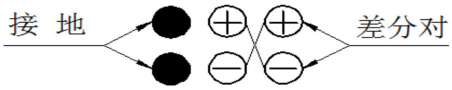

Right-angle printed circuit board products require compensation for printed circuit board wiring.

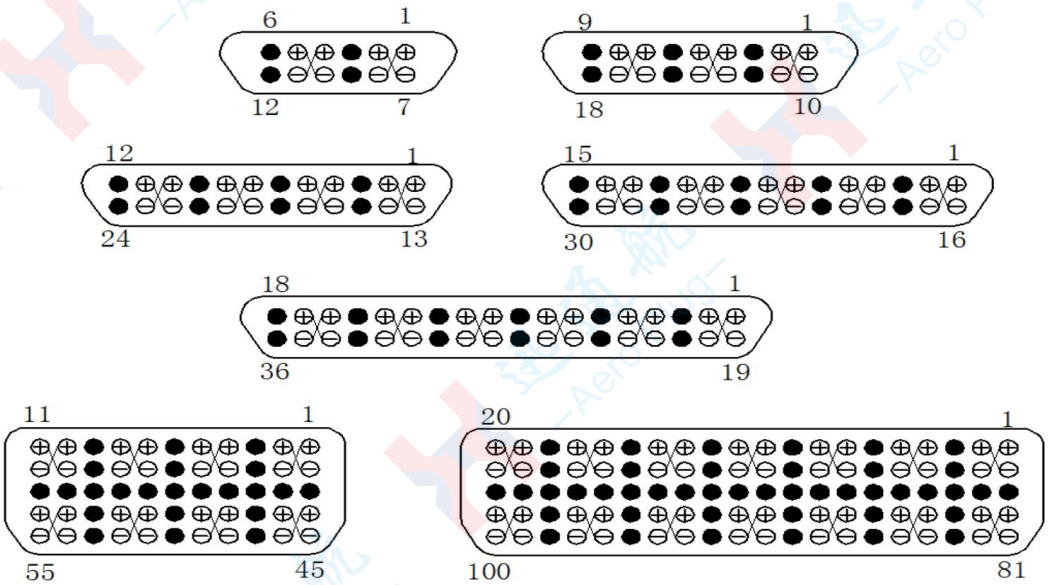

Ordering Code

HJ30J - × TJ/ZK × ×- × ×
① ② ③ ④ ⑤ ⑥ ⑦

① Main Designation， HJ30J

②Number of Contacts：12、18、24、30、36、55、100

③ Connector & Contact Type：TJ—Plug with pins； ZK — Socket with sockets； TJ and ZK are fixed mating pairs

④Locking and Mounting Component Type:

No letter — Crimp

S — Solder

N — Through-hole PCB

NB — Surface Mount Technology

W — Right-angle through-hole PCB

⑤ Locking and Mounting Component Type:

Typical types include Type L, K, P accessories, etc. (see Locking Component Types and Usage Instructions for J30J Series Products for details)；

Notes：

Locking component for Type N through-hole PCB products: Type P51；

Locking component for Type N5 through-hole PCB products: Type P92；

Locking component for Type N8 through-hole PCB products: Type P85 (different from J30J Series products).

⑥ Modified Product Identification：

A-Cable clamping plate at the tail

J-PCB pad pitch of 1.27mm (only applicable to surface mount products)

⑦ Specific Wire Requirements: Including wire length, external protection, etc. (see Ordering Model Instructions for Wire-Equipped Products—only applicable to crimp-type products)

Classification Table of HJ30J Series Plugs and Sockets

Plug and Socket Type	Basic Marking	Plug and Socket Type	Notes
Crimp Type	Plug HJ30J-TJ Socket HJ30J-ZK	Metal Housing、	The type of locking component can be selected according to specific requirements.
	Plug HJ30J-TJ-A Socket HJ30J-ZK-A	Compared with the HJ30J-TJ/ZK series products, this model is equipped with the -A accessory.	Same as above
Through-hole PCB	Plug HJ30J-TJN Socket HJ30J-ZKN	The contact termination style is through-hole PCB, with a PCB grid pitch of 1.27×1.27 mm.	The P51 type locking component is recommended, which is suitable for PCBs with a thickness of less than 2 mm.
	Plug HJ30J-TJN5 Socket HJ30J-ZKN5	Compared with the HJ30J-TJN/ZKN products, the pin length is extended to 5 mm.	The P92 type locking component is recommended, which is suitable for PCBs with a thickness of less than 3 mm.
	PlugHJ30J-TJN8 Socket HJ30J-ZKN8	Compared with the HJ30J-TJN/ZKN products, the pin length is extended to 6 mm.	The P85 type locking component is recommended, which is suitable for PCBs with a thickness of less than 4 mm.
Vertical Surface Mount Technology	Plug HJ30J-TJNB-J Socket HJ30J-ZKNB-J	The contact termination style is Vertical Surface Mount Technology (Vertical SMT).	The P5 type locking component of the J30J series is recommended, which is suitable for PCBs with a thickness of less than 2 mm.
Right-angle PCB	Plug HJ30J-TJW Socket HJ30J-ZKW	The contact termination style is right-angle PCB, with a PCB grid pitch of 1.27×1.27 mm.	The P7 type locking component is recommended, which is suitable for PCBs with a thickness of less than 3.5 mm.

Ordering Instructions

1、When selecting HJ30J series products, locking components and accessories shall be chosen in accordance with the accessory specifications. If no locking component is required, the letter "Y" shall be adopted for the locking component designation in the model name.

2、Ordering Model Specifications for Wire-Assembled Products

(1) For the wires equipped with HJ30J series crimped products， Wires for differential signal transmission: Core wires of 26# Category 5e network cable,Ground wire: AFR-250-0.15-250V (white color);

a) Wire length: Refers to the length of the wire extending from the end face of the housing, measured in millimeters, subject to user requirements.

b) External wire protection:: Marked with letter "P" when the wire harness is sheathed with a light-duty wave filter sleeve,Marked with letter "F" when the wire harness is sheathed with a nylon thread sleeve (military green),Marked with "PF" when the wire harness is sheathed with both a light-duty wave filter sleeve and a nylon thread sleeve (military green).

c)Model naming example 1: User orders HJ30J-12TJY product without locking component, and the wire harness is not sheathed with a wave filter sleeve or nylon thread sleeve; the ordering model is: HJ30J-12TJY.

Example 2: User orders HJ30J-12TJL-A product with L-type locking component, -A accessory, wire length of 500mm, and the wire is sheathed with both a wave filter sleeve and a nylon thread sleeve; the ordering model is: HJ30J-12TJL-A (L500PF).

(2) If the user has other requirements for wires, the wire specifications shall be confirmed with our technical personnel, who will provide the latest ordering model. The wiring requirements shall be specified in the contract.

3、Notes: When connecting wire-assembled products with other components, ensure the compatibility between the wire specifications and the connected components. Meanwhile, pay attention to the soldering temperature and time to avoid deformation of the wire insulation layer caused by excessively high temperature or prolonged soldering.

For PCB-mount products, protect the product pins during use to prevent collision and deformation. The soldering temperature shall be controlled within 260℃, and the soldering time shall not exceed 3 seconds.

When using locking components, ensure that the locking components of the selected plug and socket are mutually compatible; otherwise, normal mating cannot be achieved. For the installation and matching details of locking components, refer to the "HJ30J Series Locking Components" section.

Overall Dimensions

The 3D renderings below are for reference only. Please refer to the physical product when placing an order.

HJ30J Series Crimped Products

HJ30J-TJ Series Products

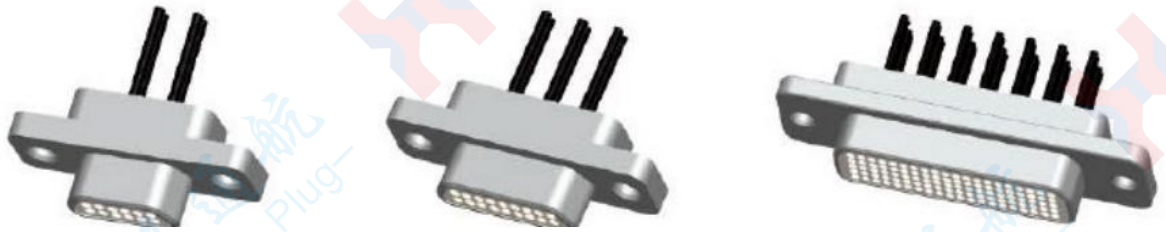

Plug HJ30J-12、18、24、30、36、55、100TJ

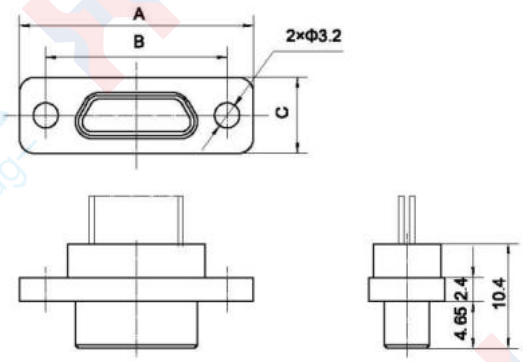

Plug model	A	B	C
HJ30J-12TJ	23.5	18.2	7.57
HJ30J-18TJ	27.4	21.97	7.57
HJ30J-24TJ	29.84	24.51	7.57
HJ30J-30TJ	33.66	28.32	7.57
HJ30J-36TJ	37.46	32.13	7.57
HJ30J-55TJ	33.1	27.4	11.8
HJ30J-100TJ	44.5	38.8	11.8

HJ30J-ZK Series Products

Socket HJ30J-12、18、24、30、36、55、100ZK

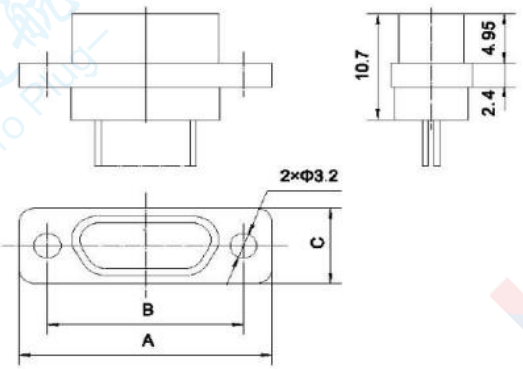

Plug model	A	B	C
HJ30J-12ZK	23.5	18.2	7.57
HJ30J-18ZK	27.4	21.97	7.57
HJ30J-24ZK	29.84	24.51	7.57
HJ30J-30ZK	33.66	28.32	7.57
HJ30J-36ZK	37.46	32.13	7.57
HJ30J-55ZK	33.1	27.4	11.8
HJ30J-100ZK	44.5	38.8	11.8

HJ30J Series Crimped Products with -A Accessory

HJ30J-TJ-A Series Products

Plug HJ30J-12、18、24、30、36、55、100TJ-A

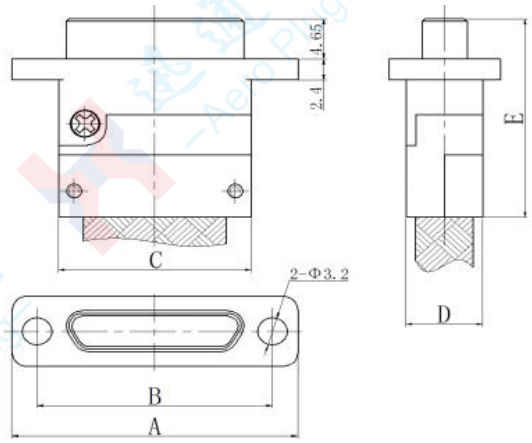

Plug model	A	B	C	D	E
HJ30J-12TJ-A	23.5	18.2	13.8	8	23
HJ30J-18TJ-A	27.4	21.97	17.5	8	23
HJ30J-24TJ-A	29.84	24.51	20	8	23
HJ30J-30TJ-A	33.66	28.32	23.88	8	23
HJ30J-36TJ-A	37.46	32.13	27.8	8	23
HJ30J-55TJ-A	33.1	27.4	22	11.8	27
HJ30J-100TJ-A	44.5	38.8	33.4	11.8	27

HJ30J-ZK-A Series Products

Socket HJ30J-12、18、24、30、36、55、100ZK-A

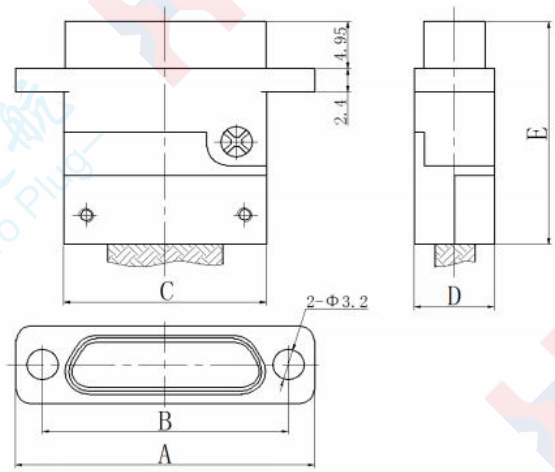

Plug model	A	B	C	D	E
HJ30J-12ZK-A	23.5	18.2	13.8	8	23.5
HJ30J-18ZK-A	27.4	21.97	17.6	8	23.5
HJ30J-24ZK-A	29.84	24.51	20	8	23.5
HJ30J-30ZK-A	33.66	28.32	23.8 8	8	23.5
HJ30J-36ZK-A	37.46	32.13	27.8	8	23.5
HJ30J-55ZK-A	33.1	27.4	22	11.8	27.5
HJ30J-100ZK-A	44.5	38.8	33.4	11.8	27.5

HJ30J-N Series Straight PCB-Mount Products

HJ30J-TJN Series Products



Plug HJ30J-12、18、24、30、36、55、100TJN

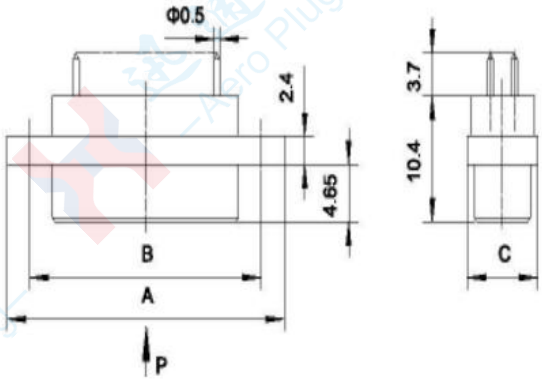

Plug model	A	B	C
HJ30J-12TJN	23.5	18.2	7.57
HJ30J-18TJN	27.4	21.97	7.57
HJ30J-24TJN	29.84	24.51	7.57
HJ30J-30TJN	33.66	28.32	7.57
HJ30J-36TJN	37.46	32.13	7.57
HJ30J-55TJN	33.1	27.4	11.8
HJ30J-100TJN	44.5	38.8	11.8

HJ30J-ZKN Series Products



Socket HJ30J-12、18、24、30、36、55、100ZK

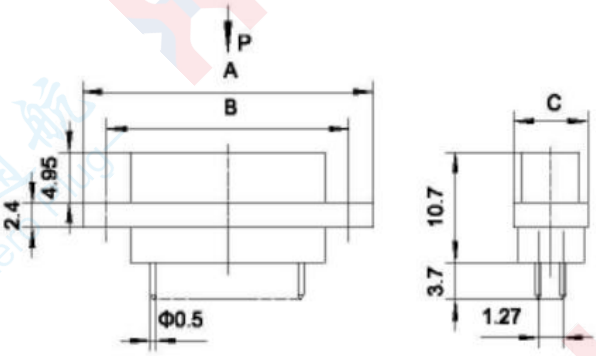

Plug model	A	B	C
HJ30J-12ZKN	23.5	18.2	7.57
HJ30J-18ZKN	27.4	21.97	7.57
HJ30J-24ZKN	29.84	24.51	7.57
HJ30J-30ZKN	33.66	28.32	7.57
HJ30J-36ZKN	37.46	32.13	7.57
HJ30J-55ZKN	33.1	27.4	11.8
HJ30J-100ZKN	44.5	38.8	11.8

HJ30J-N5 Series Straight PCB-Mount Products

HJ30J-TJN5 Series Products



Plug HJ30J-12、18、24、30、36、55、100TJN5

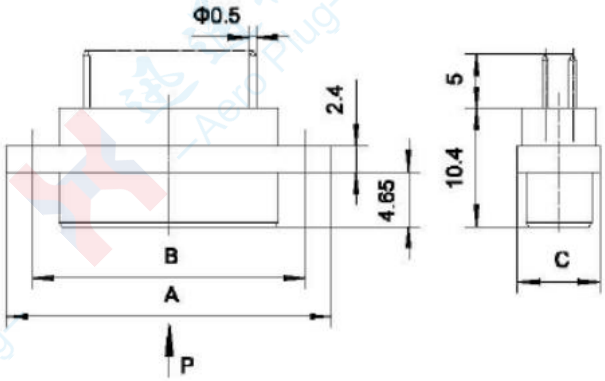

Plug model	A	B	C
HJ30J-12TJN5	23.5	18.2	7.57
HJ30J-18TJN5	27.4	21.97	7.57
HJ30J-24TJN5	29.84	24.51	7.57
HJ30J-30TJN5	33.66	28.32	7.57
HJ30J-36TJN5	37.46	32.13	7.57
HJ30J-55TJN5	33.1	27.4	11.8
HJ30J-100TJN5	44.5	38.8	11.8

HJ30J-ZKN5 Series Products



Socket HJ30J-12、18、24、30、36、55、100ZKN5

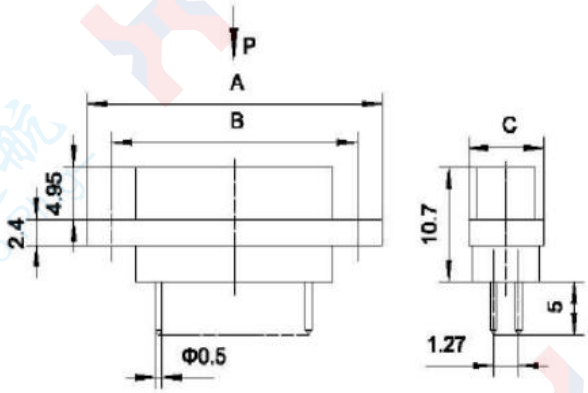

Plug model	A	B	C
HJ30J-12ZKN5	23.5	18.2	7.57
HJ30J-18ZKN5	27.4	21.97	7.57
HJ30J-24ZKN5	29.84	24.51	7.57
HJ30J-30ZKN5	33.66	28.32	7.57
HJ30J-36ZKN5	37.46	32.13	7.57
HJ30J-55ZKN5	33.1	27.4	11.8
HJ30J-100ZKN5	44.5	38.8	11.8

HJ30J-N8 Series Straight PCB-Mount Products

HJ30J-TJN8 Series Products



Plug HJ30J-12、18、24、30、36、55、100TJN8

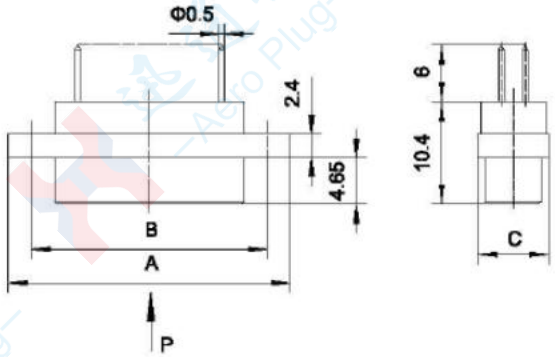

Plug model	A	B	C
HJ30J-12TJNB	23.5	18.2	7.57
HJ30J-18TJNB	27.4	21.97	7.57
HJ30J-24TJNB	29.84	24.51	7.57
HJ30J-30TJNB	33.66	28.32	7.57
HJ30J-36TJNB	37.46	32.13	7.57
HJ30J-55TJNB	33.1	27.4	11.8
HJ30J-100TJNB	44.5	38.8	11.8

HJ30J-ZKN8 Series Products



Socket HJ30J-12、18、24、30、36、55、100ZKN8

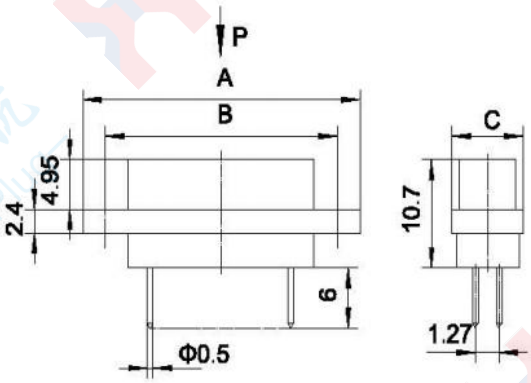

Plug model	A	B	C
HJ30J-12ZKNB	23.5	18.2	7.57
HJ30J-18ZKNB	27.4	21.97	7.57
HJ30J-24ZKNB	29.84	24.51	7.57
HJ30J-30ZKNB	33.66	28.32	7.57
HJ30J-36ZKNB	37.46	32.13	7.57
HJ30J-55ZKNB	33.1	27.4	11.8
HJ30J-100ZKNB	44.5	38.8	11.8

HJ30J Series Vertical Surface Mount Products

HJ30J-TJNB-J Series Products



Plug HJ30J-12、18、24、30、36TJNB-J

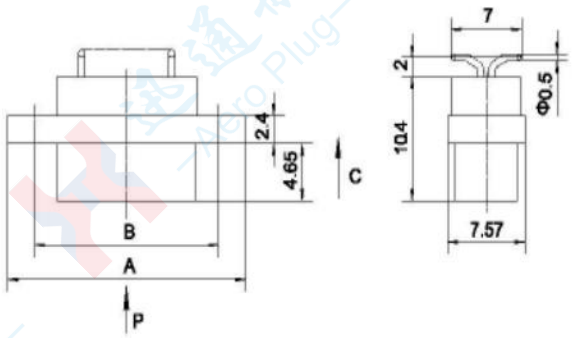

Plug model	A	B
HJ30J-12TJNB-J	23.5	18.2
HJ30J-18TJNB-J	27.4	21.97
HJ30J-24TJNB-J	29.84	24.51
HJ30J-30TJNB-J	33.66	28.32
HJ30J-36TJNB-J	37.46	32.13

HJ30J-ZKNB-J Series Products


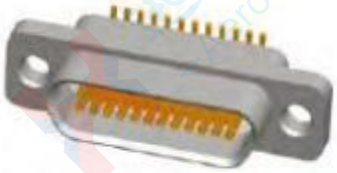


Socket HJ30J-12、18、24、30、36ZKNB-J

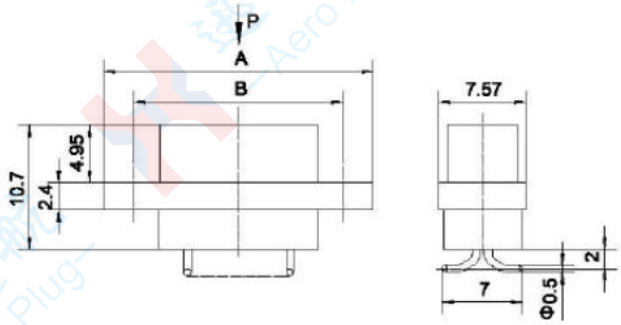

Plug model	A	B
HJ30J-12ZKNB-J	23.5	18.2
HJ30J-18ZKNB-J	27.4	21.97
HJ30J-24ZKNB-J	29.84	24.51
HJ30J-30ZKNB-J	33.66	28.32
HJ30J-36ZKNB-J	37.46	32.13

HJ30J Series Right-Angle PCB-Mount Products

HJ30J-TJW Series Products



Plug HJ30J-12、18、24、30、36、55、100TJW

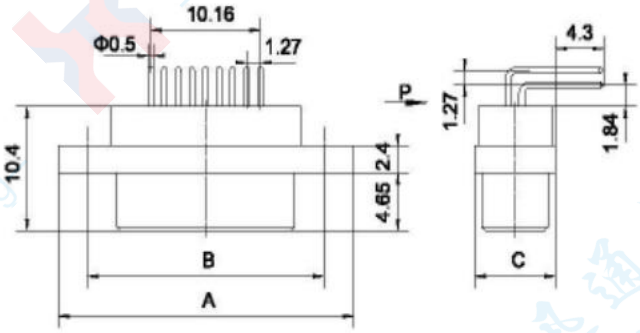

Plug model	A	B	C
HJ30J-12TJW	23.5	18.2	7.57
HJ30J-18TJW	27.4	21.97	7.57
HJ30J-24TJW	29.84	24.51	7.57
HJ30J-30TJW	33.66	28.32	7.57
HJ30J-36TJW	37.46	32.13	7.57
HJ30J-55TJW	33.1	27.4	11.8
HJ30J-100TJW	44.5	38.8	11.8

HJ30J-ZKW Series Products



Socket HJ30J-12、18、24、30、36、55、100ZKW

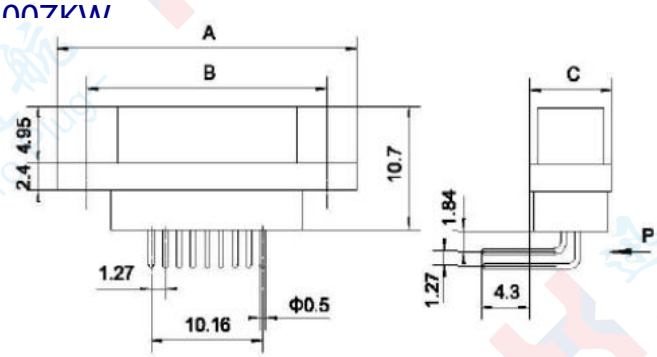

Plug model	A	B	C
HJ30J-12ZKW	23.5	18.2	7.57
HJ30J-18ZKW	27.4	21.97	7.57
HJ30J-24ZKW	29.84	24.51	7.57
HJ30J-30ZKW	33.66	28.32	7.57
HJ30J-36ZKW	37.46	32.13	7.57
HJ30J-55ZKW	33.1	27.4	11.8
HJ30J-100ZKW	44.5	38.8	11.8

Recommended PCB Hole Dimensions for HJ30J Series (All referenced to the P-direction)

PCB Hole Dimensions for HJ30J Series Straight PCB-Mount Plugs: HJ30J-nTJN, HJ30J-nTJN5, HJ30J-nTJN8

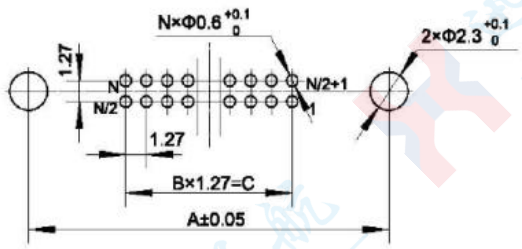

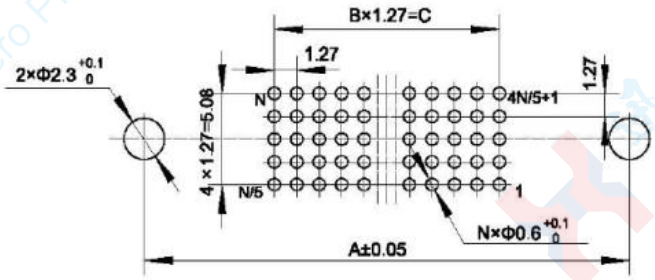

12 ~ 36 core

55 ~ 100 core

Contact Count	A	B	C	N
12	18.2	5	6.35	12
18	21.97	8	10.16	18
24	24.51	11	13.97	24
30	28.32	14	17.78	30
36	32.13	17	21.59	36
55	27.4	10	12.7	55
100	38.8	19	24.13	100

PCB Hole Dimensions for HJ30J Series Straight PCB-Mount Plugs: HJ30J-nZKN, HJ30J-nZKN5, HJ30J-nZKN8

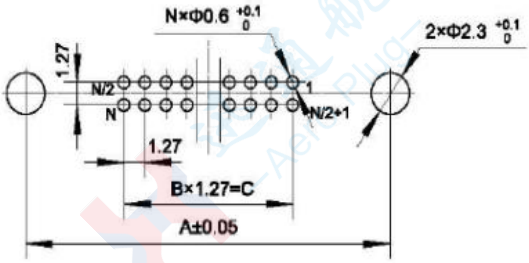

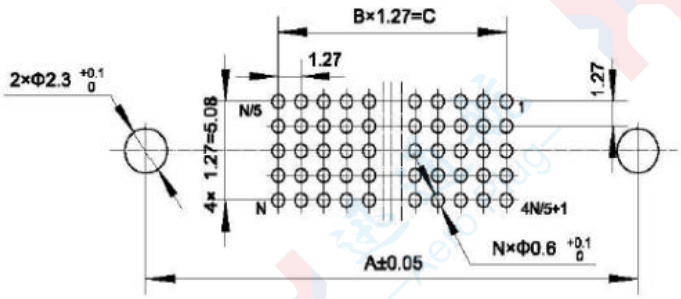

12~36 core

55~100 core

Contact Count	A	B	C	N
12	18.2	5	6.35	12
18	21.97	8	10.16	18
24	24.51	11	13.97	24
30	28.32	14	17.78	30
36	32.13	17	21.59	36
55	27.4	10	12.7	55
100	38.8	19	24.13	100

HJ30J Series Right-Angle PCB-Mount Plug: HJ30J-nTJW

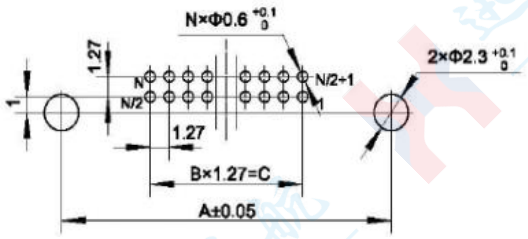

12~36 core

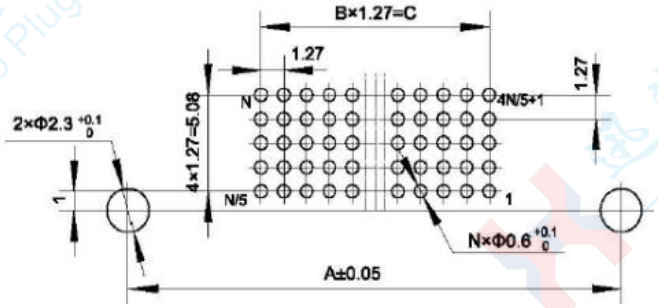

55~100 core

Contact Count	A	B	C	N
12	18.2	5	6.35	12
18	21.97	8	10.16	18
24	24.51	11	13.97	24
30	28.32	14	17.78	30
36	32.13	17	21.59	36
55	27.4	10	12.7	55
100	38.8	19	24.13	100

HJ30J series curved printed plug HJ30J-nZKW

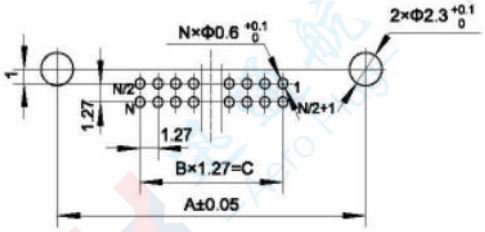

12~36 core

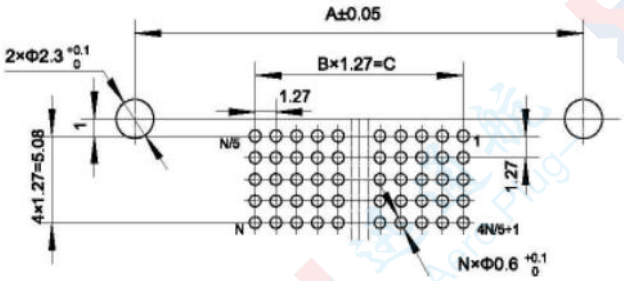

55~100 core

Contact Count	A	B	C	N
12	18.2	5	6.35	12
18	21.97	8	10.16	18
24	24.51	11	13.97	24
30	28.32	14	17.78	30
36	32.13	17	21.59	36
55	27.4	10	12.7	55
100	38.8	19	24.13	100

HJ30J Series Surface Mount Plug: HJ30J-nTJNB-J

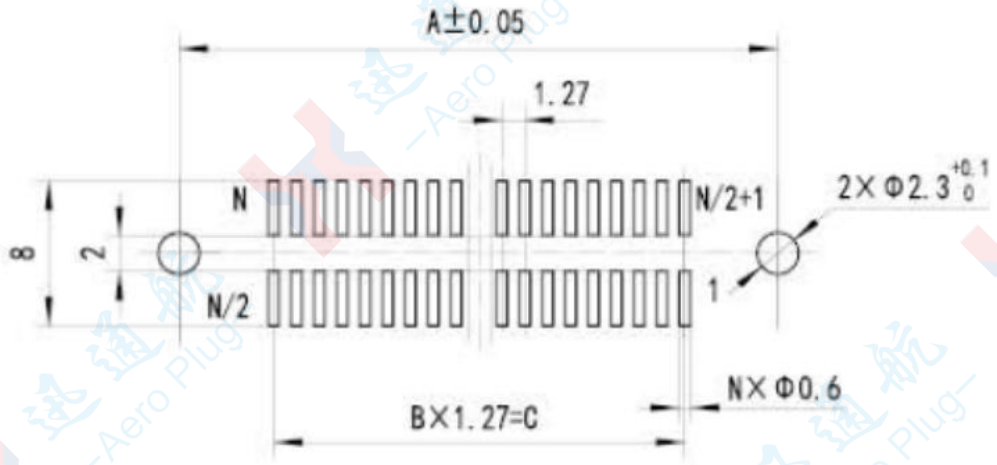

Contact Count(n)	A	B	C	N
12	18.2	5	6.35	12
18	21.97	8	10.16	18
24	24.51	11	13.97	24
30	28.32	14	17.78	30
36	32.13	17	21.59	36

HJ30J Series Surface Mount Plug: HJ30J-nZKNB-J

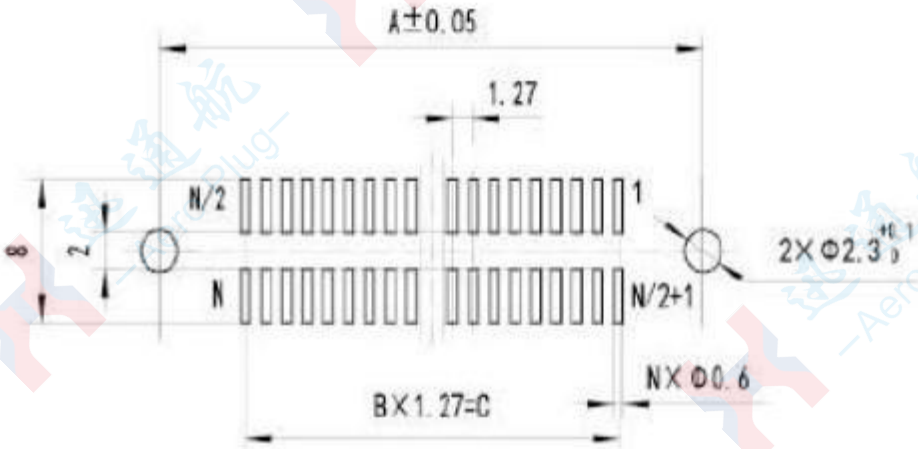

Contact Count(n)	A	B	C	N
12	18.2	5	6.35	12
18	21.97	8	10.16	18
24	24.51	11	13.97	24
30	28.32	14	17.78	30
36	32.13	17	21.59	36

HJ30J Series Locking Components

1、Free-End Locking Components (Refer to the Accessory Specifications for J30J Series Micro-Rectangular Connectors)

2、Fixed-End Locking Components(For crimped products, refer to the Accessory Specifications for J30J Series Micro-Rectangular Connectors;For vertical surface mount products, the P5 type locking component of J30J Series Micro-Rectangular Connectors is recommended))

2.1 Locking Components for Straight PCB-Mount Products

P51, P85, and P92 type locking components are only suitable for front-panel mounting of straight PCB-mount products.

Assembly Diagram

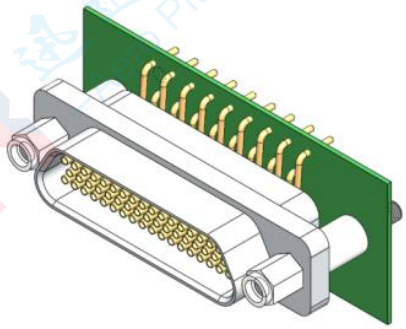

Product Outline Dimension Drawing

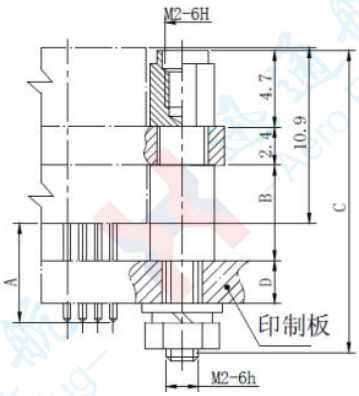

HJ30J Fixed-End Locking Components	A	B	C	D Applicable PCB Thickness Range	Matched HJ30J Free-End Locking Components
P51	3.7	4.1	16	≤2	Type L, Type L7 and Type K
P85	6	4.1	18.6	3～4	
P92	5	4.1	18	2～3	

The V22-Type Locking Component is only applicable to non-locking plugs and receptacles

Assembly Diagram

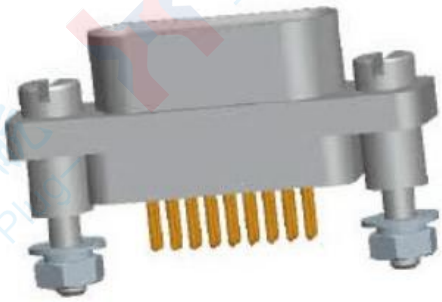

Product Outline Dimension

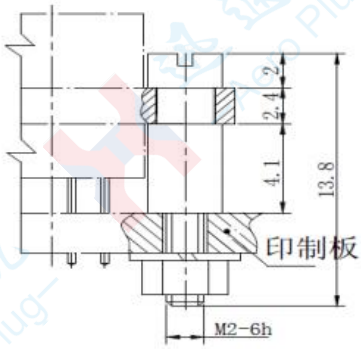

HJ30J Fixed-End Locking Components	Applicable PCB Thickness Range	Matching HJ30J Free-End Locking Components
V22	≤2	Without Locking Components

2.2 Locking Components for Right-Angle PCB-Mount Products

The Type P7 Locking Component is only applicable to front-panel mounting of 90° right-angle PCB-mount products.

Assembly Diagram

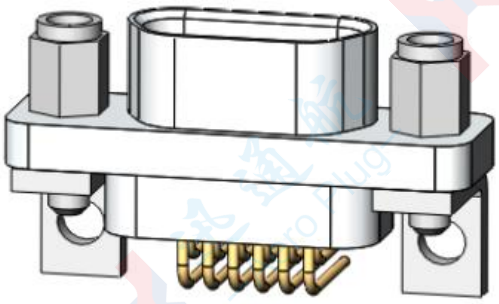

Product Outline Dimension Drawing

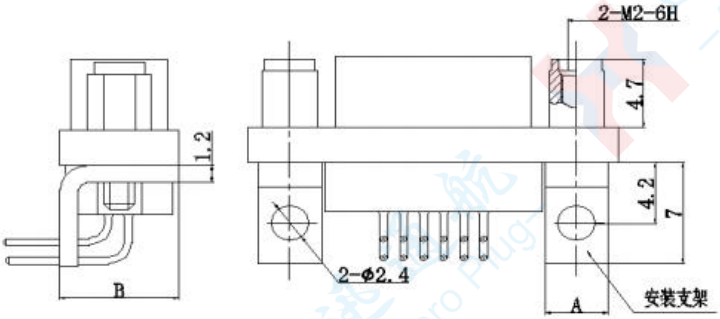

The Number of Cores of Products Compatible with the Type P7 Fixed-End Locking Component	A	B	Compatible HJ30J Free-End Locking Components
12～36core	4	7.5	Type L, Type L7, Type K
55～100core	6	18.6	

The Type P2 and Type P14 Locking Components are only applicable to the rear-panel mounting of 90°right-angle PCB-mount products, with hexagon socket head cap screws.

Assembly Diagram

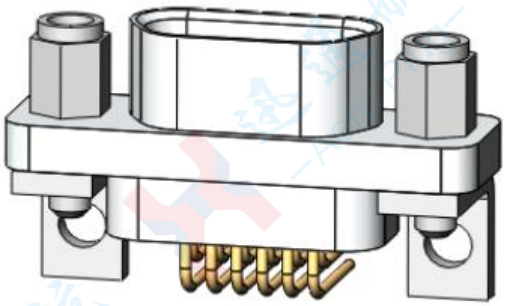

Product Outline Dimension Drawing

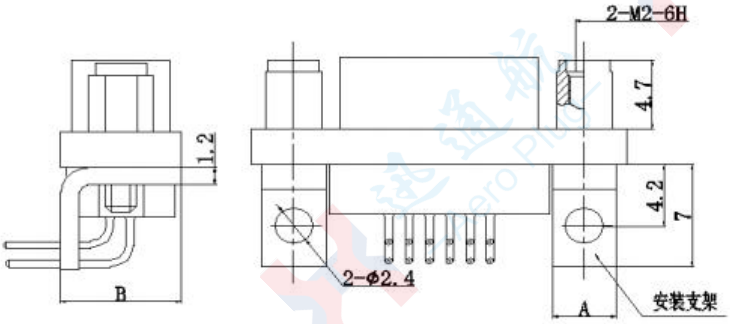

The Number of Cores of Products Compatible with the Type P2 and Type P14 Fixed-End Locking Components	A	B	C		Compatible HJ30J Free-End Locking Components
			P2	P14	
12～36core	4	7.6	1	3	Type L, Type L7, Type K
55～100core	5	11.8	1	3	

The Type P58 and Type P60 Locking Components are only applicable to the rear-panel mounting of 90° right-angle PCB-mount products, with slotted screw heads.

Assembly Diagram

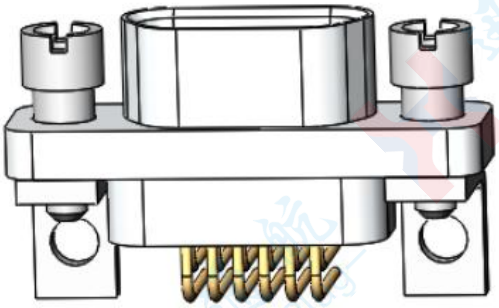

Product Outline Dimension Drawing

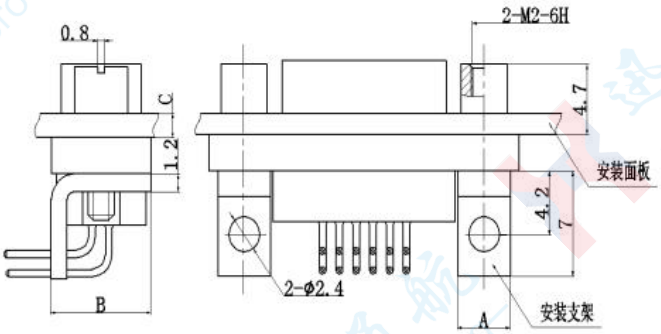

The Number of Cores of Products Compatible with the Type P58 and Type P60 Fixed-End Locking Components	A	B	C		Compatible HJ30J Free-End Locking Components
			P58	P60	
12～36core	4	7.6	2	3	Type L, Type L7, Type K
55～100core	5	11.8	2	3	

The Type V1 Locking Component is only applicable to 90° right-angle PCB-mount products that do not require locking.

Assembly Diagram

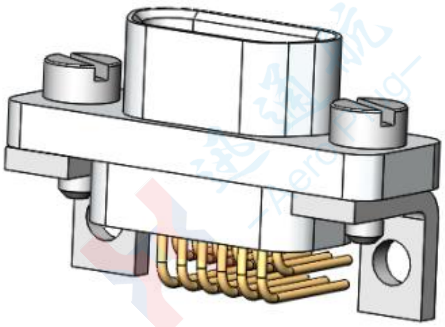

Product Outline Dimension Drawing

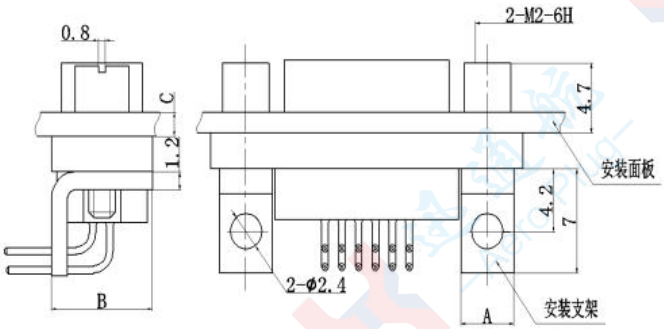

The Number of Cores of Products Compatible with the Type V1 Fixed-End Locking Component	A	B	Compatible HJ30J Free-End Locking Components
12～36core	4	7.6	Without Locking Component
55～100core	5	11.8	

J29A Micro Rectangular Electrical Connector

Feature Overview

- Number of Cores: 8 specifications available: 9, 15, 21, 25, 31, 37, 51, 66 cores
- Adopts stranded wire elastic pins (twisted pins), with a contact pitch of 1.91mm and row spacing of 1.65mm
- Conductor core cross-sectional area range: 0.15mm² ~ 0.3mm²
- Widely used for circuit connections in various electronic equipment such as aerospace, aviation, and electronic computers
- Execution standard: Complies with the requirements of GJB2446

Detailed Specifications for J29A Series Micro Rectangular Electrical Connectors
Detailed Specifications for J29M Type Micro Rectangular Electrical Connectors:

Technical Characteristics

- Ambient temperature: -55℃ ~ +125℃
- Vibration: 10Hz ~ 2000Hz 196m/s²
- Random vibration: Power spectral density 0.6G²/Hz, total acceleration RMS value 28.4G
- Shock: 1200m/s² 6ms
- Rated current: 5A
- Contact resistance: ≤ 10mΩ
- Insulation resistance: ≥ 5000MΩ
- Dielectric withstand voltage: 1500V DC
- Mechanical life: 500 cycles
- Sealing index (applicable only to J29M series products)

Water tightness: No bubbles generated during water inspection under a pressure difference of 1 atmosphere
Hermetic seal: 1×10^{-1} Pa·cm³/s (under a pressure difference of 1 atmosphere)

Spectral arrangement

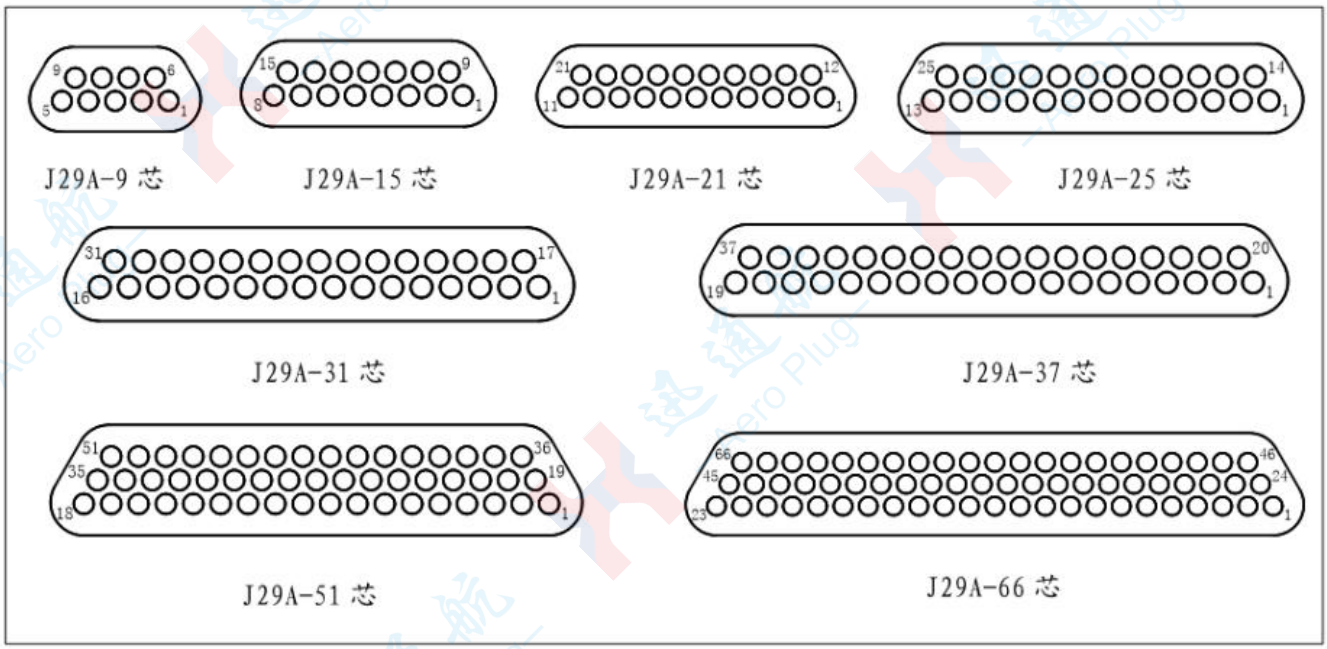

- 外壳
  - 普通系列
    - 压接系列
    - 焊接H系列
    - 直插印制板系列
    - 弯插印制板系列（专用外壳）
    - 弯插印制板W Ⅰ系列（专用外壳）
  - -A型系列（法兰盘与尾端同宽）
    - 压接系列
    - 焊接H系列
    - 弯插印制板W-A系列
    - 弯插印制板W Ⅰ-A系列
  - -A1型系列
    - 压接系列
    - 焊接H系列
  - J29M系列（密封）
    - 压接系列
    - 焊接H系列

Locking Component

- 锁紧附件
  - 自由端 — L型(L、L1～L4)
  - 固定端 — P型(P、P1～P16)
    (自由端锁紧组件与固定锁紧组件配合使用)

Tail Cover Assembly

- 尾罩合件
  - D型-带内置线夹适用于普通型的压接和焊接系列
  - D1型-无内置线夹适用于普通型压接系列
  - D2型-带内置线夹适用于-A1型系列

Description

- 插头合件
- 锁紧组件
  - 插头

- 插座合件
- 锁紧组件
  - 插座

As shown in the figure above, when selecting products from the J29A series, users must simultaneously choose the plug (receptacle) assembly and locking component to form a complete plug or receptacle. The tail cover assembly is not a mandatory selection and can be chosen as needed. Detailed specifications for specific selection are provided in the subsequent relevant chapters.

order mark

■ Ordering Code for J29A Series

J29A ×- × TJ/ZK × ×- × ×(Supplementary Instructions)

① ② ③ ④ ⑤ ⑥ ⑦ ⑧

① Main Designation: J29A

② Series Modification: no symbol — Basic type C — Housing material: Stainless steel

③ Number of Contacts: 9, 15, 21, 25, 31, 37, 51, 66

④ Connector & Contact Type:: TJ- Plug with pins; ZK- Receptacle with sockets;
TJ and ZK are fixed matching pairs.

⑤Contact Tail Configuration: No letter — Crimp type; H- Soldered type;
N- Straight PCB mount;
W - Right-angle PCB mount (1.91×2.54 grid) ;
WI - Right-angle PCB mount (3.82×2.54 grid) ;

⑥ Locking Component Category: See "J29A Locking Components" for details.。
Note: Locking components of Types P3, P4, P6, P13, and P15 are exclusive to J29A-□TJW/ZKW/TJWI/ZKWI products.

⑦ Housing Type:No letter — Standard type (with flat counterbores on the mating end of the housing flange),
J29A-□TJW/ZKW/TJWI/ZKWI — Special housing (no flat counterbores on the mating end of the housing flange; 4.5×4.5 square hole on the potting end)
A - Housing flange width equal to the tail end width

⑧ Tail Cover Assembly Type: D、D1、D2
Note: Supplementary instructions are not part of the ordering code. When selecting, customers shall specify the crimped wire specifications (e.g., conductor cross-sectional area, length, color, etc.) in parentheses. Provide a wiring diagram if the wiring relationship is complex.

Ordering Code Example

J29A - 25 ZK L4 - A1 D2 (Supplementary Instructions)

This code indicates a connector with 25 contacts, a receptacle equipped with sockets, crimp-type contact tails, an A1-type housing, an L4-type free-end locking component, and a D2-type tail cover assembly. (Supplementary Instructions: Conductor cross-sectional area, length, color, etc.)

J29A Standard Type / J29A Crimp Series

- Plug
- J29A-9、15、21、25、31、37、51、66TJ

Product Stereogram

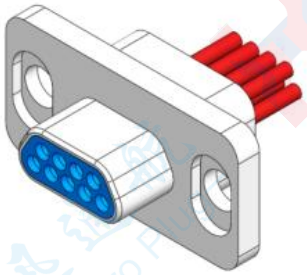

J29A-9TJ

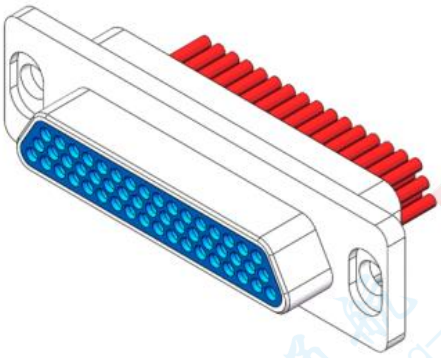

J29A-51TJ

- Socket
- J29A-9、15、21、25、31、37、51、66ZK

Product Stereogram

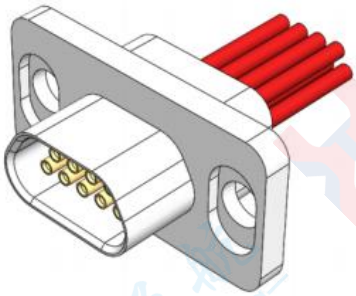

J29A-9ZK

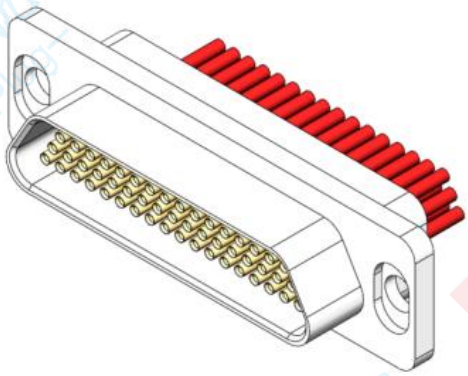

J29A-51ZK

Product Outline Dimension Drawing

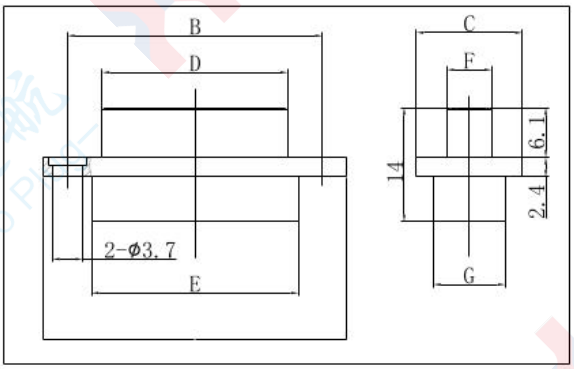

J29A-□TJ

Product Outline Dimension Drawing

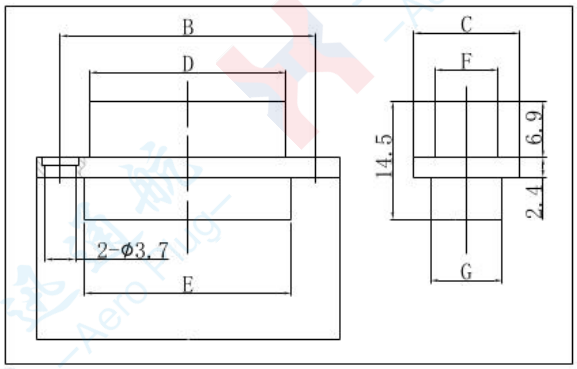

J29A-□ZK

J29A-TJ&J29A-ZK

order mark	A	B	C	D	E	F	G
J29A-9TJ	26.1	20.1	13	11.6	14.2	5.5	8.8
J29A-15TJ	31.6	25.6	13	17.1	19.7	5.5	8.8
J29A-21TJ	37.3	31.3	13	22.8	25.4	5.5	8.8
J29A-25TJ	42	36	13	27.1	29.9	6	8.8
J29A-31TJ	47.8	41.8	13	32.9	35.7	6	8.8
J29A-37TJ	53.5	47.5	13	38.6	41.4	6	8.8
J29A-51TJ	52	46	14.6	37.1	39.9	7.7	10.7
J29A-66TJ	61.5	55.5	14.6	46.6	49.4	7.7	10.7
J29A-9ZK	26.1	20.1	13	12.9	14.2	6.8	8.8
J29A-15ZK	31.6	25.6	13	18.4	19.7	6.8	8.8
J29A-21ZK	37.3	31.3	13	24.2	25.4	6.8	8.8
J29A-25ZK	42	36	13	28.8	29.9	7.7	8.8
J29A-31ZK	47.8	41.8	13	34.6	35.7	7.7	8.8
J29A-37ZK	53.5	47.5	13	40.3	41.4	7.7	8.8
J29A-51ZK	52	46	14.6	38.8	39.9	9.4	10.7
J29A-66ZK	61.5	55.5	14.6	48.3	49.4	9.4	10.7

Outline Dimension Drawing of Mated Products

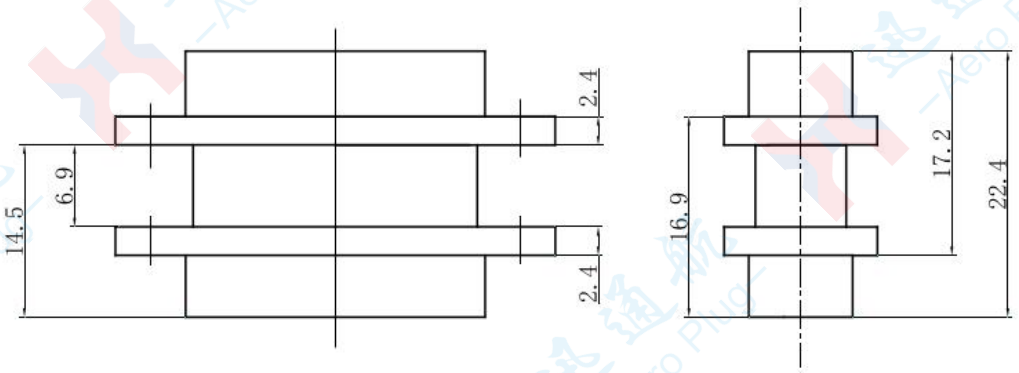

J29A-9、15、21、25、31、37、51、66TJ/ZK

J29A Standard Type / J29A Soldered H Series

- Plug
- J29A-9、15、21、25、31、37、51、66TJH

Product Stereogram

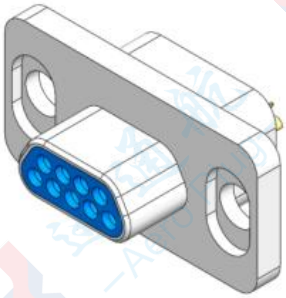

J29A-9TJH

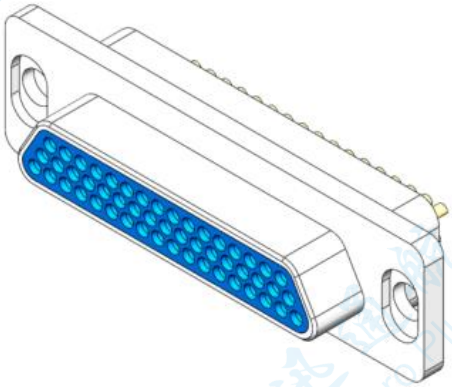

J29A-51TJH

- Socket
- J29A-9、15、21、25、31、37、51、66ZKH

Product Stereogram

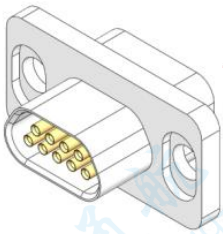

J29A-9ZKH

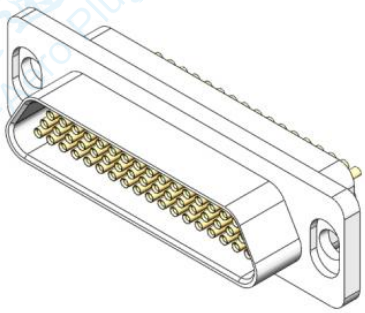

J29A-51ZKH

Product Outline Dimension Drawing

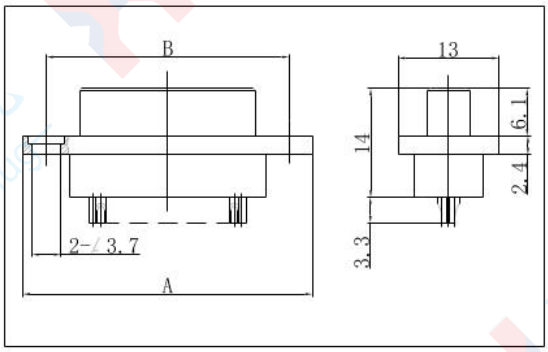

J29A-9、15、21、25、31、37TJH

Product Outline Dimension Drawing

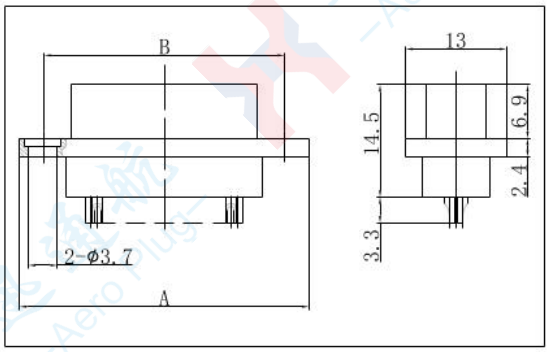

J29A-9、15、21、25、31、37ZKH

Outline Dimension Drawing of the Product

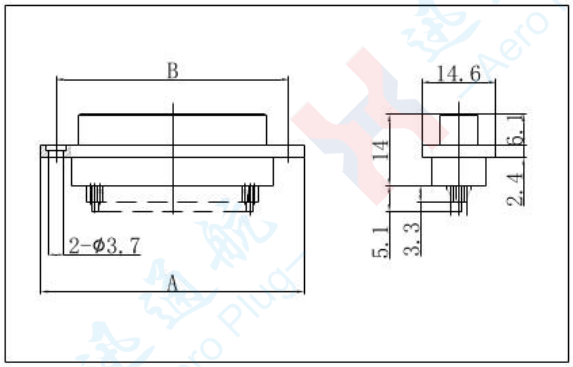

J29A-51、66TJH

Outline Dimension Drawing of the Product

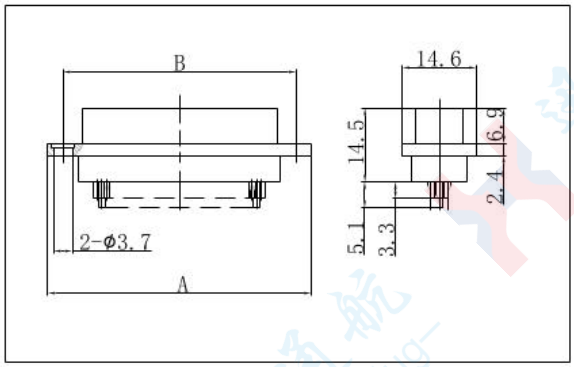

J29A-51、66ZKH

series spectrum	A	B	series spectrum	A	B
J29A-9TJH	26.1	20.1	J29A-9ZKH	26.1	20.1
J29A-15TJH	31.6	25.6	J29A-15ZKH	31.6	25.6
J29A-21TJH	37.3	31.3	J29A-21ZKH	37.3	31.3
J29A-25TJH	42	36	J29A-25ZKH	42	36
J29A-31TJH	47.8	41.8	J29A-31ZKH	47.8	41.8
J29A-37TJH	53.5	47.5	J29A-37ZKH	53.5	47.5
J29A-51TJH	52	46	J29A-51ZKH	52	46
J29A-66TJH	61.5	55.5	J29A-66ZKH	61.5	55.5

J29A Standard Type / J29A Straight PCB Mount N Series
Features: PCB pad spacing: 1.91×1.65 grid (column × row)

- Plug
- J29A-9、15、21、25、31、37、51、66TJN

Product Stereogram

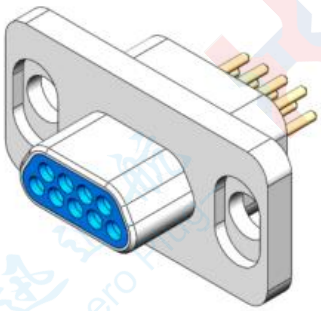

J29A-9TJN

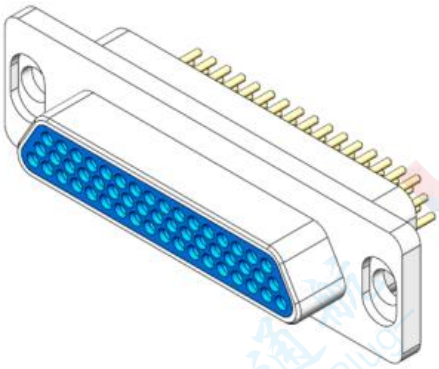

J29A-51TJN

- Socket
- J29A-9、15、21、25、31、37、51、66ZKN

Product Stereogram

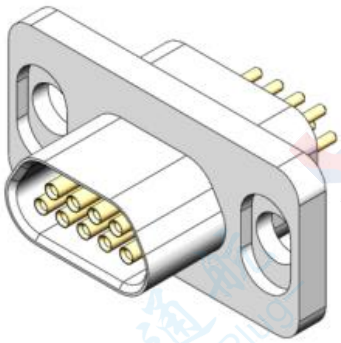

J29A-9ZKN

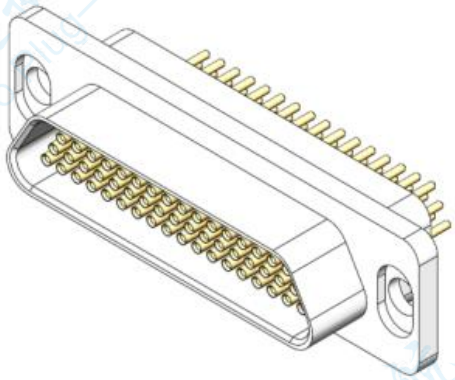

J29A-51ZKN

Product Outline Dimension Drawing

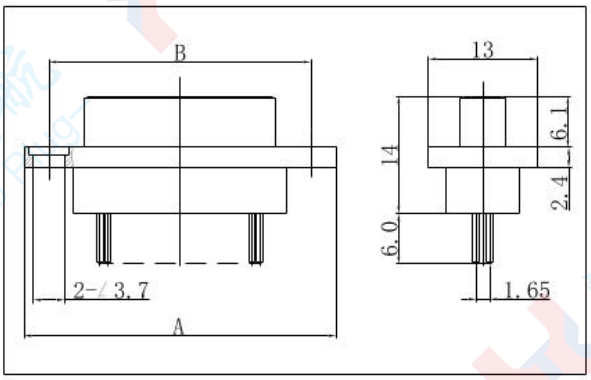

J29A-9、15、21、25、31、37TJN

Product Outline Dimension Drawing

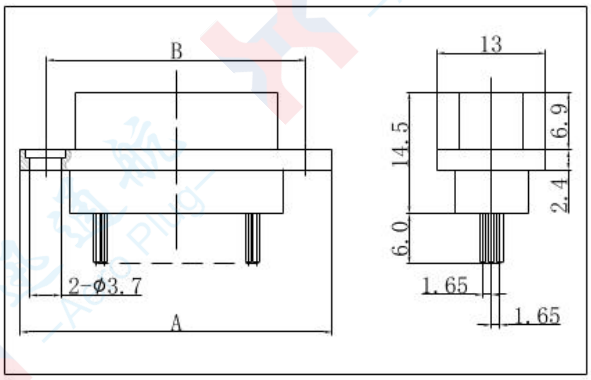

J29A-9、15、21、25、31、37ZKN

Product Outline Dimension Drawing

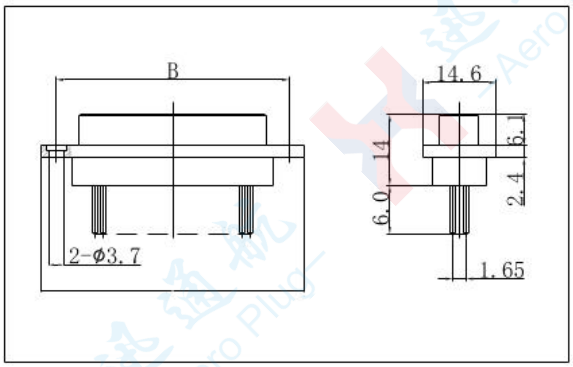

J29A-51、66TJN

Product Outline Dimension Drawing

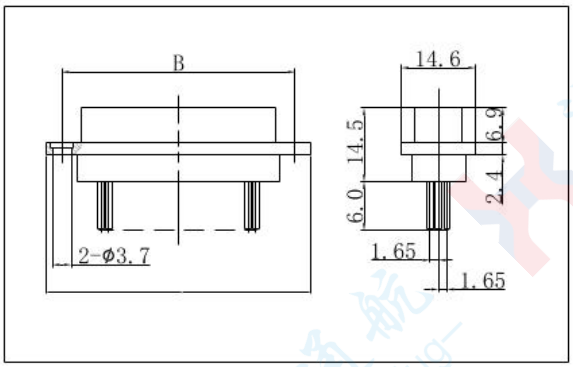

J29A-51、66ZKN

series spectrum	A	B	series spectrum	A	B
J29A-9TJN	26.1	20.1	J29A-9ZKN	26.1	20.1
J29A-15TJN	31.6	25.6	J29A-15ZKN	31.6	25.6
J29A-21TJN	37.3	31.3	J29A-21ZKN	37.3	31.3
J29A-25TJN	42	36	J29A-25ZKN	42	36
J29A-31TJN	47.8	41.8	J29A-31ZKN	47.8	41.8
J29A-37TJN	53.5	47.5	J29A-37ZKN	53.5	47.5
J29A-51TJN	52	46	J29A-51ZKN	52	46
J29A-66TJN	61.5	55.5	J29A-66ZKN	61.5	55.5

J29A Standard Type / J29A Right-angle PCB Mount W Series
Feature: PCB hole spacing: 1.91×2.54 (units: mm, default if not specified)

- Plug
- J29A-9、15、21、25、31、37、51、66TJW

Product Stereogram

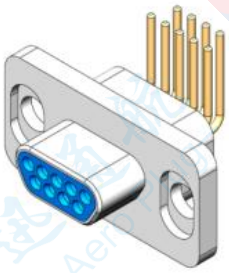

J29A-9TJW

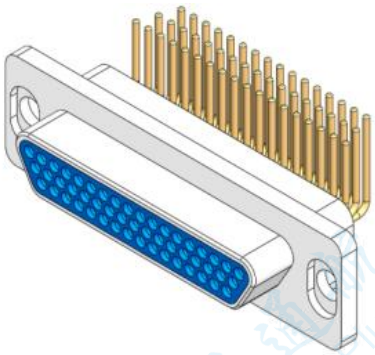

J29A-51TJW

- Socket
- J29A-9、15、21、25、31、37、51、66ZKW

Product Stereogram

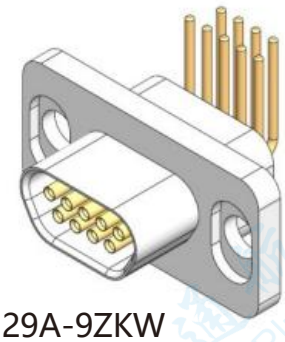

J29A-9ZKW

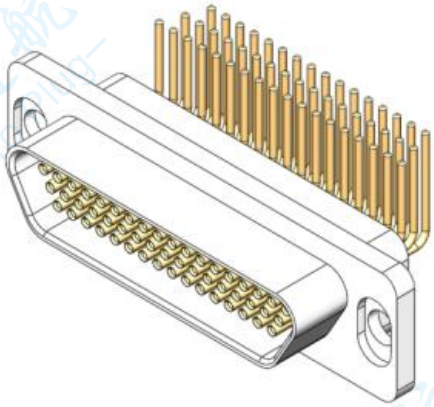

J29A-51ZKW

Product Outline Dimension Drawing

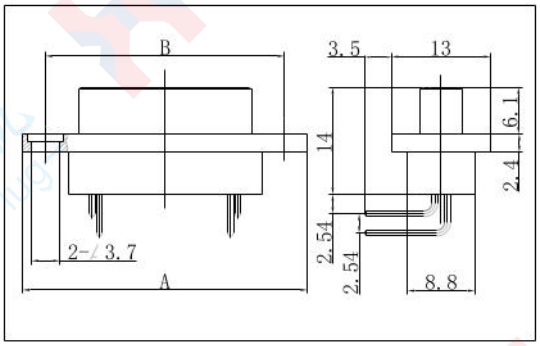

J29A-9、15、21、25、31、37TJW

Product Outline Dimension Drawing

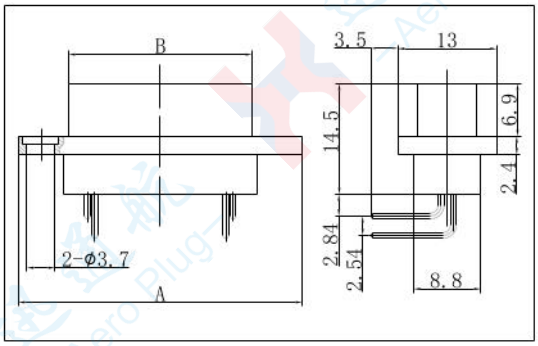

J29A-9、15、21、25、31、37ZKW

Product Outline Dimension Drawing

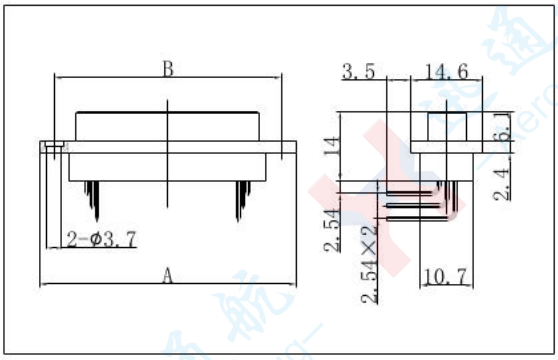

J29A-51、66TJW

Product Outline Dimension Drawing

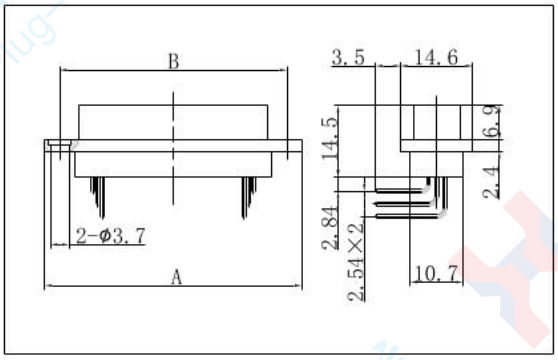

J29A-51、66ZKW

series spectrum	A	B	series spectrum	A	B
J29A-9TJW	26.1	20.1	J29A-9ZKW	26.1	20.1
J29A-15TJW	31.6	25.6	J29A-15ZKW	31.6	25.6
J29A-21TJW	37.3	31.3	J29A-21ZKW	37.3	31.3
J29A-25TJW	42	36	J29A-25ZKW	42	36
J29A-31TJW	47.8	41.8	J29A-31ZKW	47.8	41.8
J29A-37TJW	53.5	47.5	J29A-37ZKW	53.5	47.5
J29A-51TJW	52	46	J29A-51ZKW	52	46
J29A-66TJW	61.5	55.5	J29A-66ZKW	61.5	55.5

J29A Standard Type / J29A Right-angle PCB Mount WI Series
Feature: PCB hole spacing: 3.82×2.54 (units: mm, default if not specified)

- Plug
- J29A-9、15、21、25、31、37、51、66TJWI

Product Stereogram

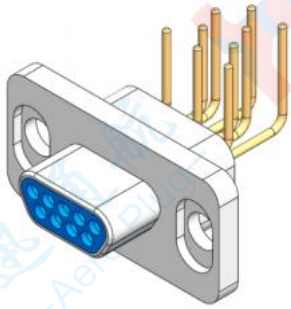

J29A-9TJWI

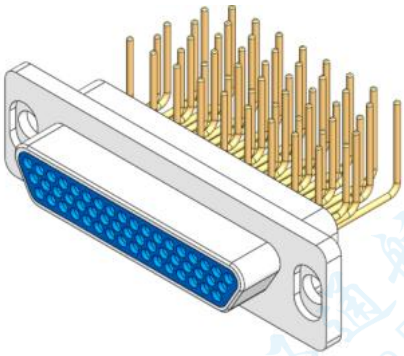

J29A-51TJWI

- Socket
- J29A-9、15、21、25、31、37、51、66ZKWI

Product Stereogram

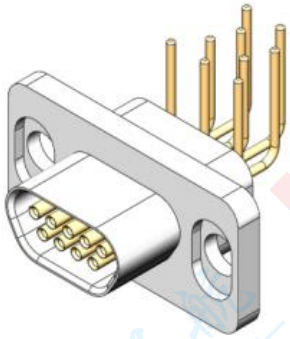

J29A-9ZKWI

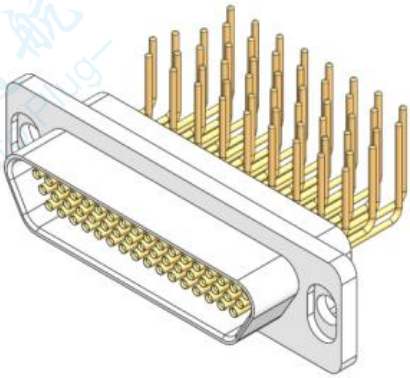

J29A-51ZKWI

Product Outline Dimension

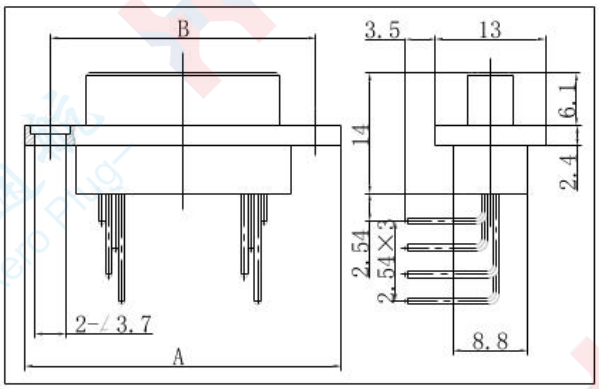

J29A-9、15、21、25、31、37TJWI

Product Outline Dimension Drawing

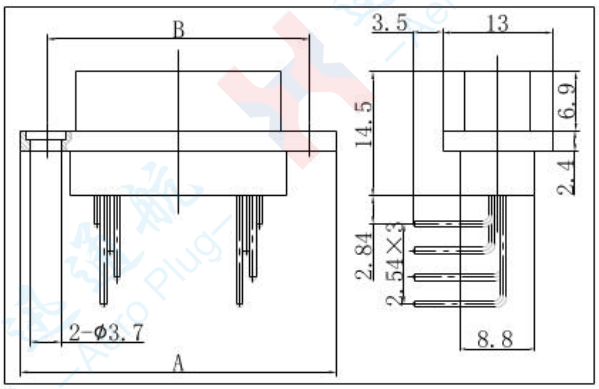

J29A-9、15、21、25、31、37ZKWI

Product Outline Dimension Drawing

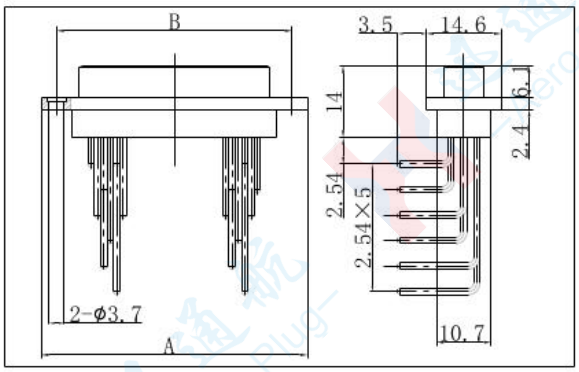

J29A-51、66TJWI

Product Outline Dimension Drawing

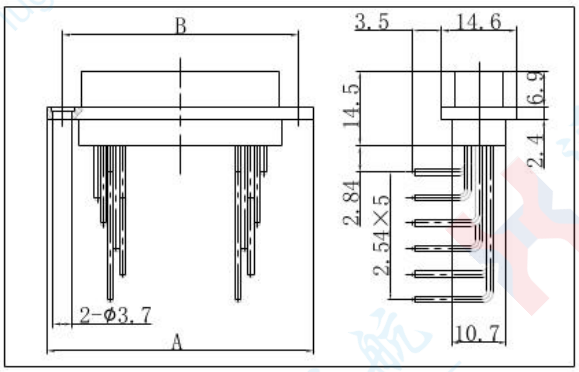

J29A-51、66ZKWI

series spectrum	A	B	series spectrum	A	B
J29A-9TJWI	26.1	20.1	J29A-9ZKWI	26.1	20.1
J29A-15TJWI	31.6	25.6	J29A-15ZKWI	31.6	25.6
J29A-21TJWI	37.3	31.3	J29A-21ZKWI	37.3	31.3
J29A-25TJWI	42	36	J29A-25ZKWI	42	36
J29A-31TJWI	47.8	41.8	J29A-31ZKWI	47.8	41.8
J29A-37TJWI	53.5	47.5	J29A-37ZKWI	53.5	47.5
J29A-51TJWI	52	46	J29A-51ZKWI	52	46
J29A-66TJWI	61.5	55.5	J29A-66ZKWI	61.5	55.5

J29A Standard Type / J29A-A Crimp Series

Feature: Modified product housing; the width of the housing flange is equal to that of the tail end.

- Plug
- J29A-9、15、21、25、31、37、51、66TJ-A

Product Stereogram

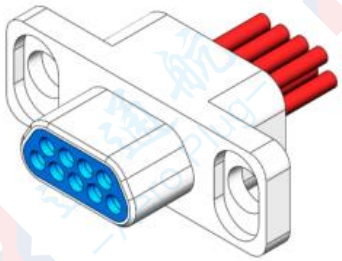

J29A-9TJ-A

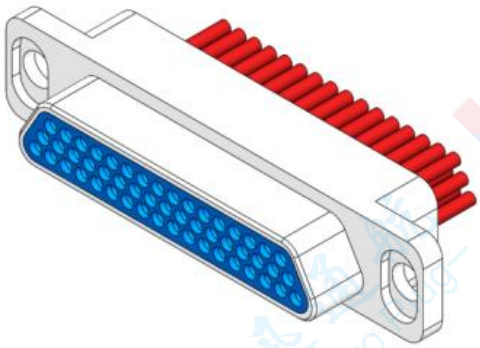

J29A-51TJ-A

- Socket
- J29A-9、15、21、25、31、37、51、66ZK-A

Product Stereogram

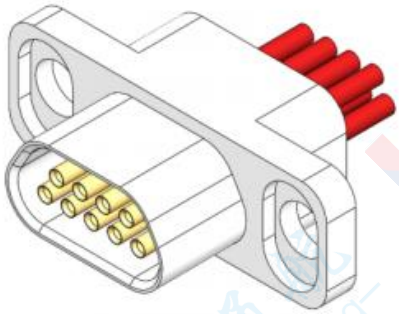

J29A-9ZK-A

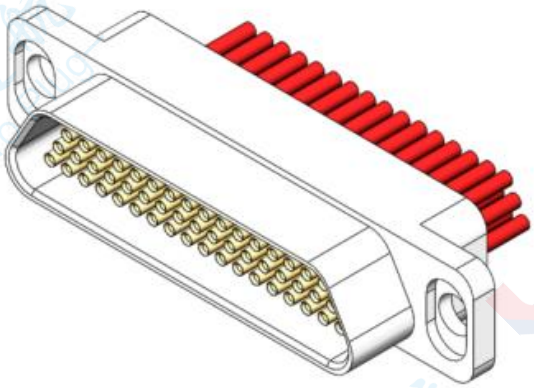

J29A-51ZK-A

Product Outline Dimension Drawing

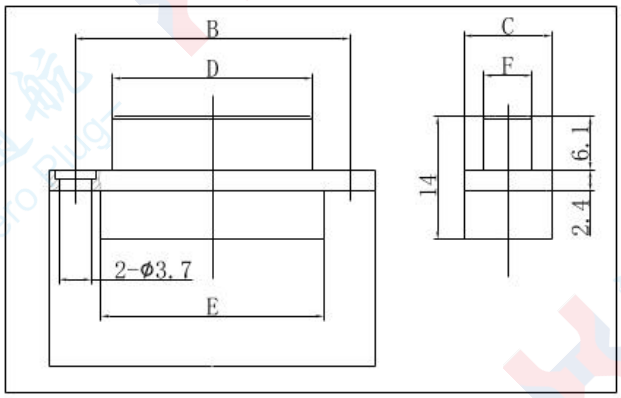

J29A-□TJ-A

Product Outline Dimension Drawing

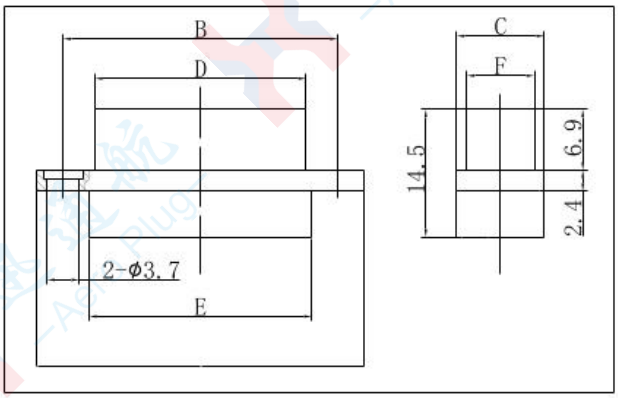

J29A-□ZK-A

J29A-TJ-A&J29A-ZK-A

订货标志	A	B	C	D	E	F
J29A-9TJ	26.1	20.1	8.8	11.6	14.2	5.5
J29A-15TJ	31.6	25.6	8.8	17.1	19.7	5.5
J29A-21TJ	37.3	31.3	8.8	22.8	25.4	5.5
J29A-25TJ	42	36	8.8	27.1	29.9	6
J29A-31TJ	47.8	41.8	8.8	32.9	35.7	6
J29A-37TJ	53.5	47.5	8.8	38.6	41.4	6
J29A-51TJ	52	46	10.7	37.1	39.9	7.7
J29A-66TJ	61.5	55.5	10.7	46.6	49.4	7.7
J29A-9ZK	26.1	20.1	8.8	12.9	14.2	6.8
J29A-15ZK	31.6	25.6	8.8	18.4	19.7	6.8
J29A-21ZK	37.3	31.3	8.8	24.2	25.4	6.8
J29A-25ZK	42	36	8.8	28.8	29.9	7.7
J29A-31ZK	47.8	41.8	8.8	34.6	35.7	7.7
J29A-37ZK	53.5	47.5	8.8	40.3	41.4	7.7
J29A-51ZK	52	46	10.7	38.8	39.9	9.4
J29A-66ZK	61.5	55.5	10.7	48.3	49.4	9.4

Outline Dimension Drawing of Mated

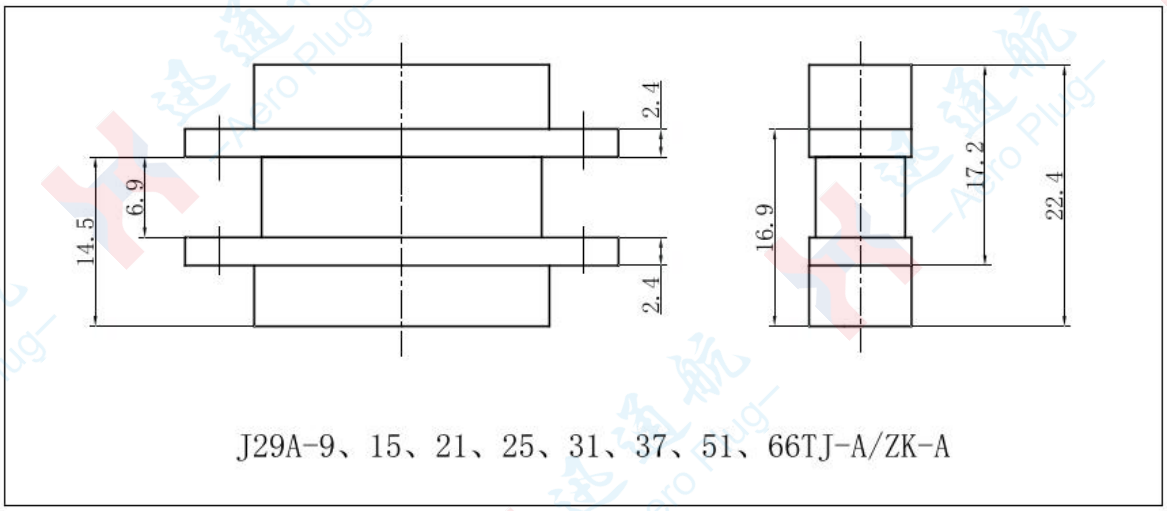

J29A Standard Type / J29A-A Soldered H Series
Feature: Modified product housing; the width of the housing flange is equal to that of the tail end.

- Plug
- J29A-9、15、21、25、31、37、51、66TJH-A

Product Stereogram

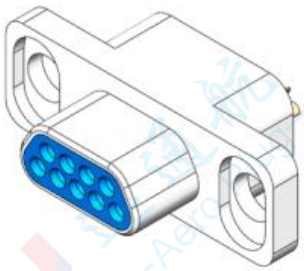

J29A-9TJH-A

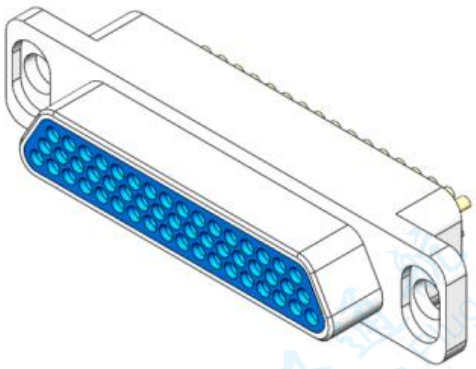

J29A-51TJH-A

- Socket
- J29A-9、15、21、25、31、37、51、66ZKH-A

Product Stereoscopic Diagram

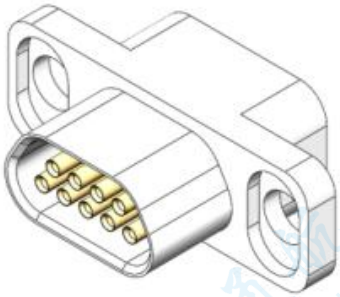

J29A-9ZKH-A

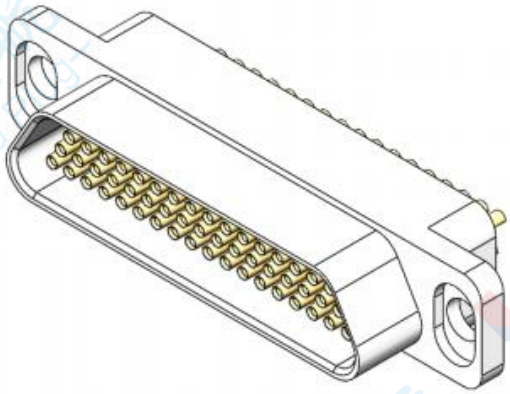

J29A-51ZKH-A

Product Outline Dimension Drawing

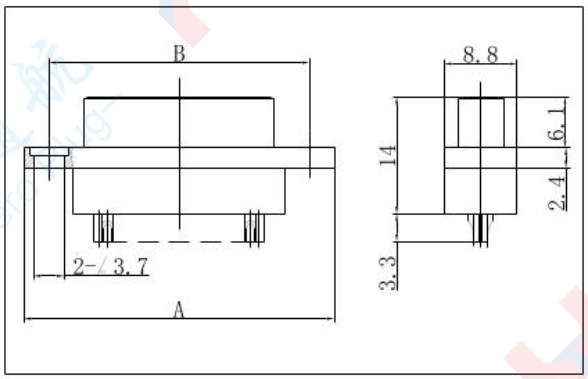

J29A-9、15、21、25、31、37TJH-A

Product Outline Dimension Drawing

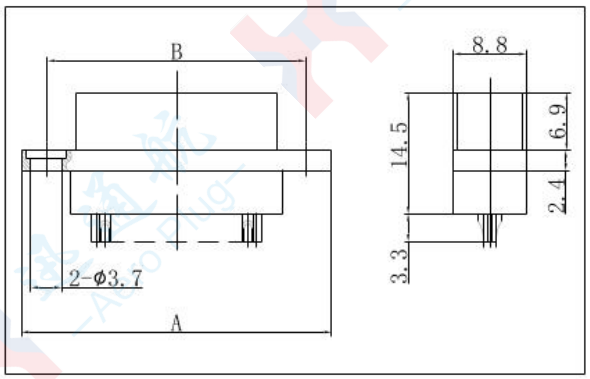

J29A-9、15、21、25、31、37ZKH-A

Product Outline Dimension Drawing

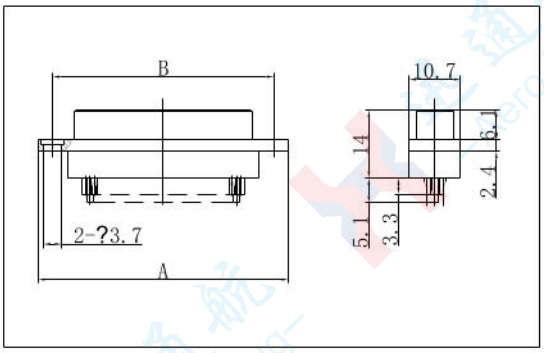

J29A-51、66TJH-A

Product Outline Dimension Drawing

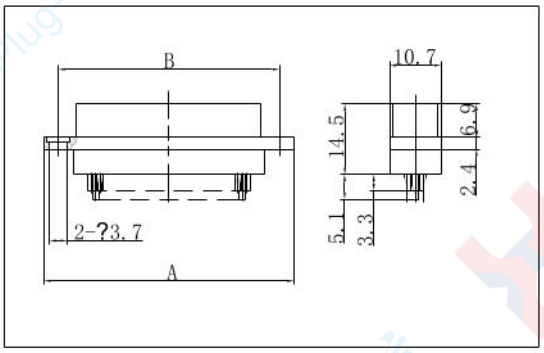

J29A-51、66ZKH-A

series spectrum	A	B	series spectrum	A	B
J29M-9TJH	26.1	20.1	J29M-9ZKH	26.1	20.1
J29M-15TJH	31.6	25.6	J29M-15ZKH	31.6	25.6
J29M-21TJH	37.3	31.3	J29M-21ZKH	37.3	31.3
J29M-25TJH	42	36	J29M-25ZKH	42	36
J29M-31TJH	47.8	41.8	J29M-31ZKH	47.8	41.8
J29M-37TJH	53.5	47.5	J29M-37ZKH	53.5	47.5
J29M-51TJH	52	46	J29M-51ZKH	52	46
J29M-66TJH	61.5	55.5	J29M-66ZKH	61.5	55.5

J29A Standard Type / J29A-A Right-angle PCB Mount W Series
PCB hole pitch: 1.91×2.54 mm，Product housing modified; the width of the housing flange is flush with the tail end.

- Plug
- J29A-9、15、21、25、31、37、51、66TJW-A

Product Stereogram

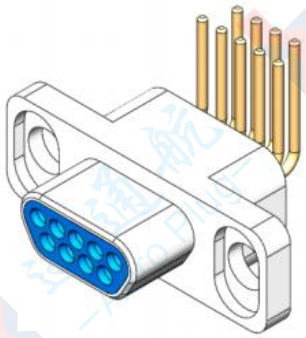

J29A-9TJW-A

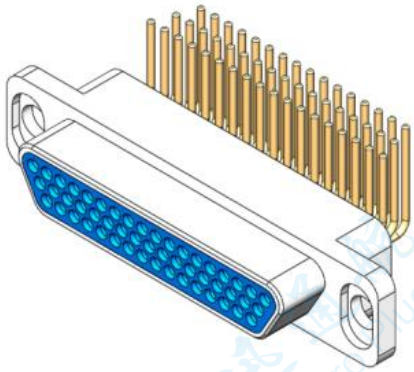

J29A-51TJW-A

- Socket
- J29A-9、15、21、25、31、37、51、66ZKW-A

Product Stereogram

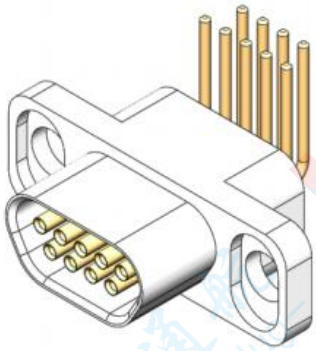

J29A-9ZKW-A

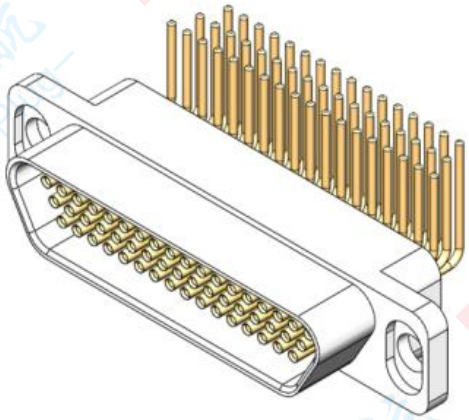

J29A-51ZKW-A

Product Outline Dimension Drawing

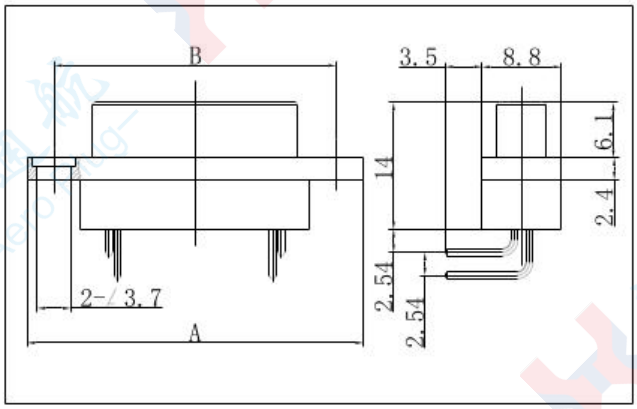

J29A-9、15、21、25、31、37TJW-A

Product Outline Dimension Drawing

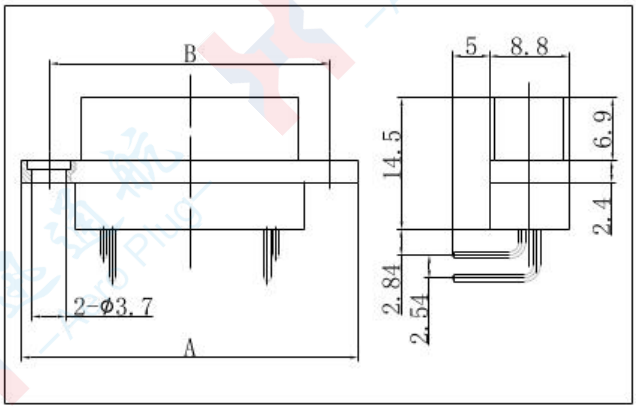

J29A-9、15、21、25、31、37ZKW-A

Product Outline Dimension Drawing

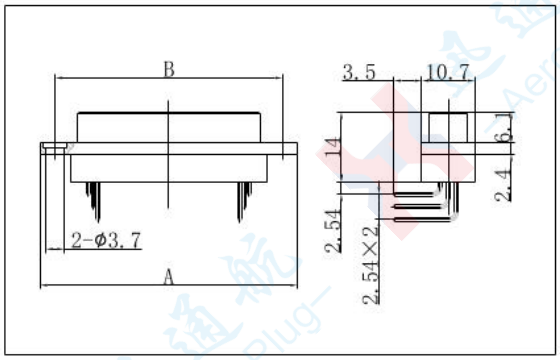

J29A-51、66TJW-A

Product Outline Dimension Drawing

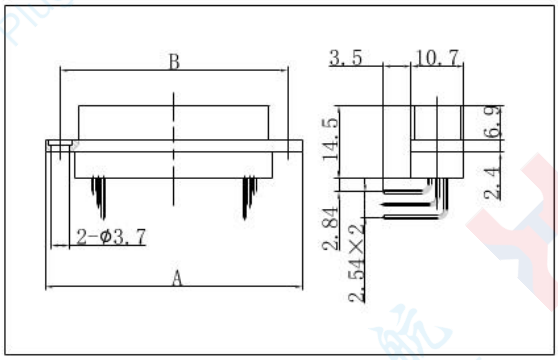

J29A-51、66ZKW-A

series spectrum	A	B	series spectrum	A	B
J29A-9TJW-A	26.1	20.1	J29A-9ZKW-A	26.1	20.1
J29A-15TJW-A	31.6	25.6	J29A-15ZKW-A	31.6	25.6
J29A-21TJW-A	37.3	31.3	J29A-21ZKW-A	37.3	31.3
J29A-25TJW-A	42	36	J29A-25ZKW-A	42	36
J29A-31TJW-A	47.8	41.8	J29A-31ZKW-A	47.8	41.8
J29A-37TJW-A	53.5	47.5	J29A-37ZKW-A	53.5	47.5
J29A-51TJW-A	52	46	J29A-51ZKW-A	52	46
J29A-66TJW-A	61.5	55.5	J29A-66ZKW-A	61.5	55.5

J29A Standard Type / J29A-A Right-angle PCB Mount WI Series

Features: PCB hole pitch: 3.82×2.54 mm, Product housing modified; the width of the housing flange is flush with the tail end.

- Plug
- J29A-9、15、21、25、31、37、51、66TJWI-A

Product Stereogram

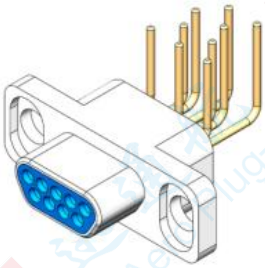

J29A-9TJWI -A

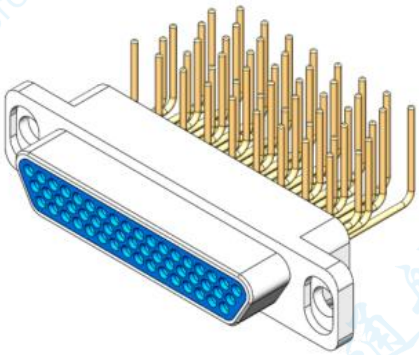

J29A-51TJWI -A

- Socket
- J29A-9、15、21、25、31、37、51、66ZKWI -A

Product Stereogram

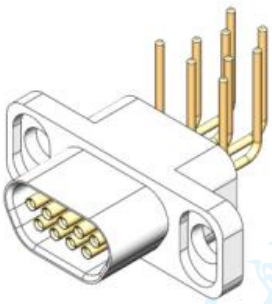

J29A-9ZKWI -A

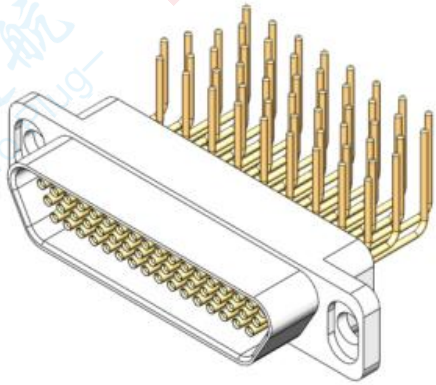

J29A-51ZKWI -A

Product Outline Dimension Drawing

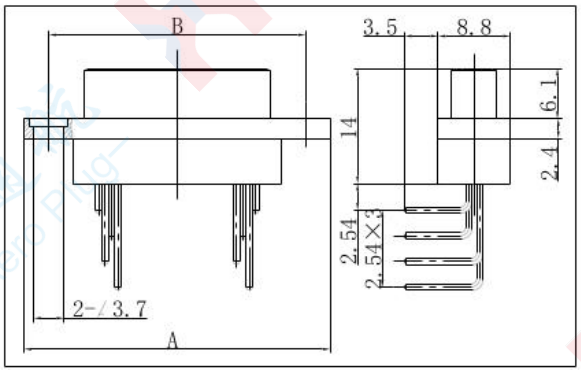

J29A-9、15、21、25、31、37TJWI-A

Product Outline Dimension Drawing

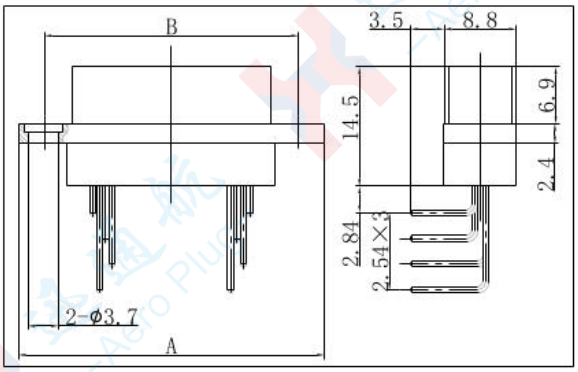

J29A-9、15、21、25、31、37ZKWI -A

Product Outline Dimension Drawing

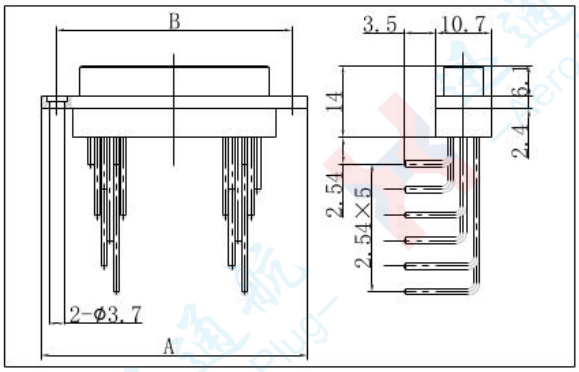

J29A-51、66TJWI -A

Product Outline Dimension

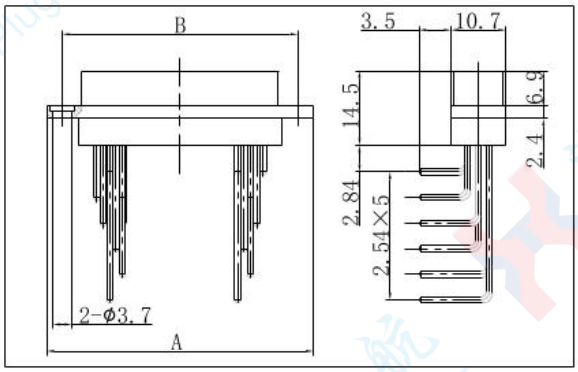

J29A-51、66ZKWI -A

series spectrum	A	B	series spectrum	A	B
J29A-9TJWI -A	26.1	20.1	J29A-9ZKWI -A	26.1	20.1
J29A-15TJWI -A	31.6	25.6	J29A-15ZKWI -A	31.6	25.6
J29A-21TJWI -A	37.3	31.3	J29A-21ZKWI -A	37.3	31.3
J29A-25TJWI -A	42	36	J29A-25ZKWI -A	42	36
J29A-31TJWI -A	47.8	41.8	J29A-31ZKWI -A	47.8	41.8
J29A-37TJWI -A	53.5	47.5	J29A-37ZKWI -A	53.5	47.5
J29A-51TJWI -A	52	46	J29A-51ZKWI -A	52	46
J29A-66TJWI -A	61.5	55.5	J29A-66ZKWI -A	61.5	55.5

J29M Series / J29M Crimp Series

The only difference between the sealed type and the standard type lies in the height of the potting cavity at the tail end; the contact tail end adopts a crimp termination.

- Plug
- J29M-9、15、21、25、31、37、51、66TJ

Product Stereogram

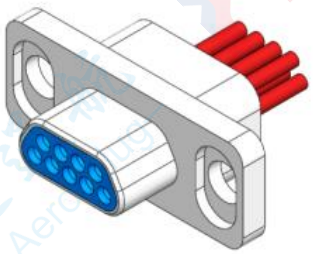

J29M-9TJ

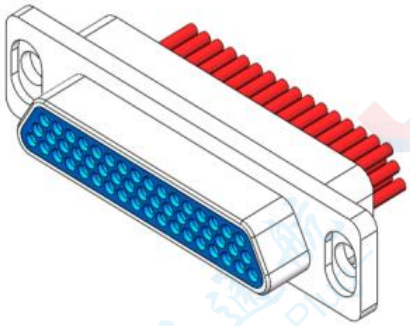

J29M-51TJ

- Socket
- J29M-9、15、21、25、31、37、51、66ZK

Product Stereogram

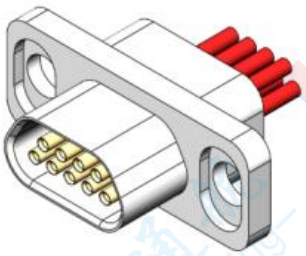

J29M-9ZK

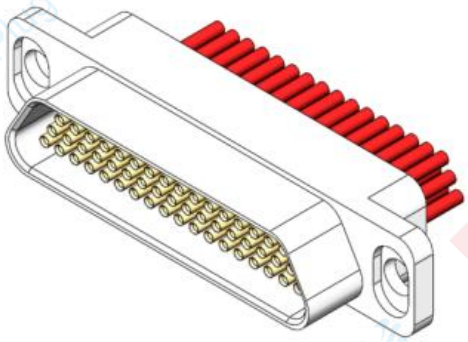

J29M-51ZK

Product Outline Dimension Drawing

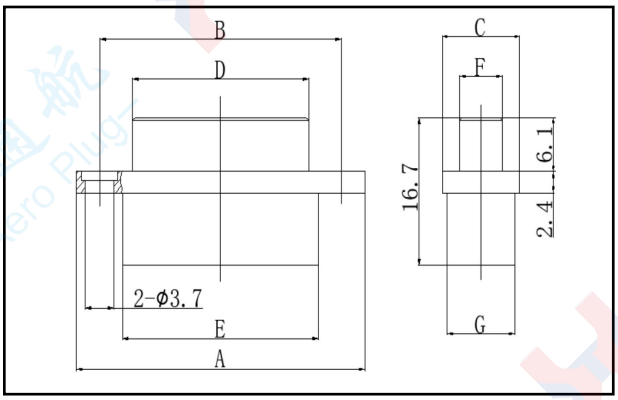

J29M-□TJ

Product Outline Dimension Drawing

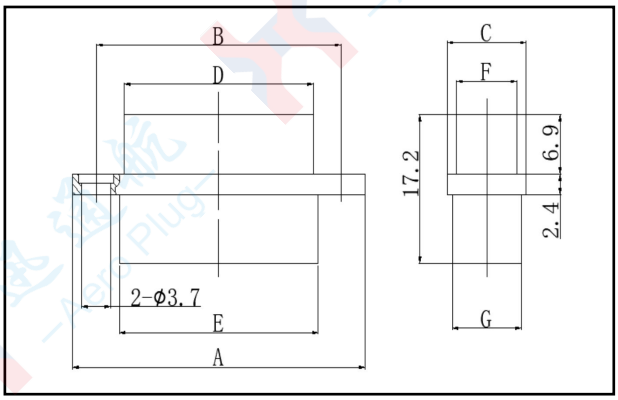

J29M-□ZK

J29M-TJ&J29M-ZK

Ordering Code	A	B	C	D	E	F	G
J29M-9TJ	26.1	20.1	13	11.6	14.2	5.5	8.8
J29M-15TJ	31.6	25.6	13	17.1	19.7	5.5	8.8
J29M-21TJ	37.3	31.3	13	22.8	25.4	5.5	8.8
J29M-25TJ	42	36	13	27.1	29.9	6	8.8
J29M-31TJ	47.8	41.8	13	32.9	35.7	6	8.8
J29M-37TJ	53.5	47.5	13	38.6	41.4	6	8.8
J29M-51TJ	52	46	14.6	37.1	39.9	7.7	10.7
J29M-66TJ	61.5	55.5	14.6	46.6	49.4	7.7	10.7
J29M-9ZK	26.1	20.1	13	12.9	14.2	6.8	8.8
J29M-15ZK	31.6	25.6	13	18.4	19.7	6.8	8.8
J29M-21ZK	37.3	31.3	13	24.2	25.4	6.8	8.8
J29M-25ZK	42	36	13	28.8	29.9	7.7	8.8
J29M-31ZK	47.8	41.8	13	34.6	35.7	7.7	8.8
J29M-37ZK	53.5	47.5	13	40.3	41.4	7.7	8.8
J29M-51ZK	52	46	14.6	38.8	39.9	9.4	10.7
J29M-66ZK	61.5	55.5	14.6	48.3	49.4	9.4	10.7

Outline Drawing of Mated Products

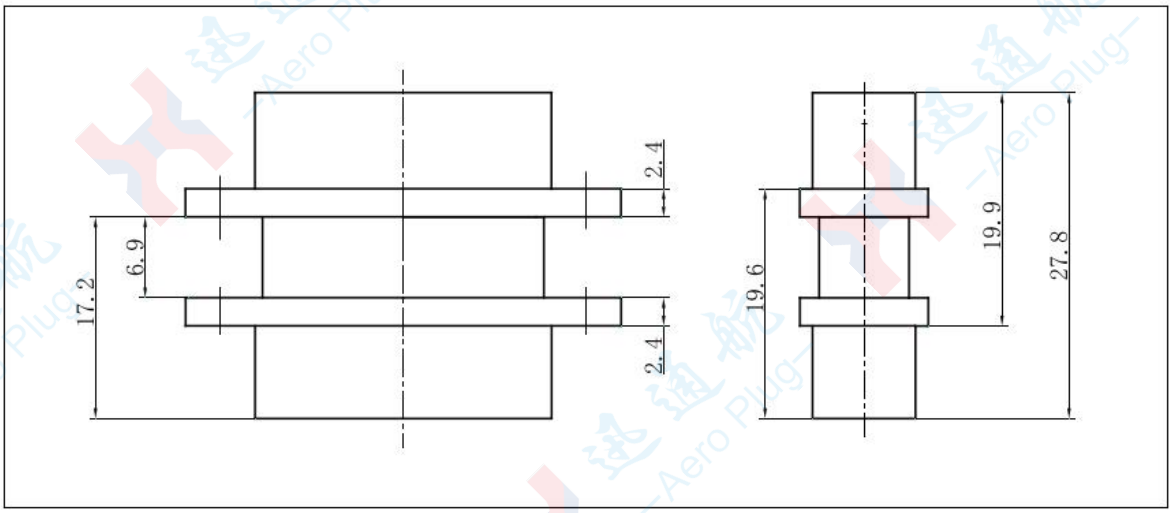

J29M Series / J29M Soldered H Series

- Plug
- J29M-9、15、21、25、31、37、51、66TJH

Product Stereogram

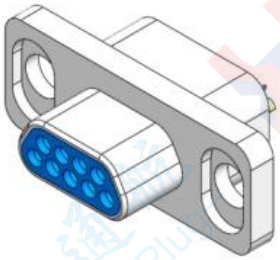

J29M-9TJH

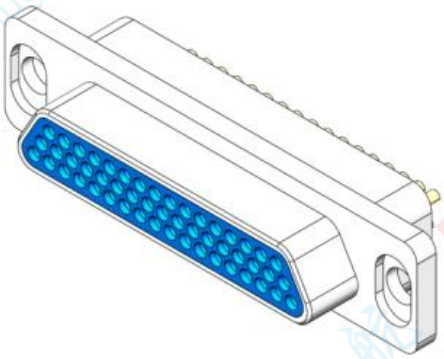

J29M-51TJH

- Socket
- J29M-9、15、21、25、31、37、51、66ZKH

Product Stereogram

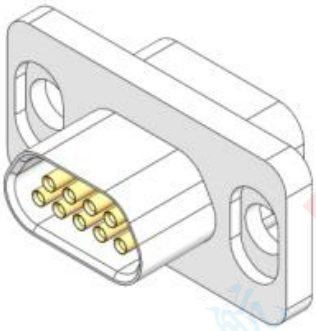

J29M-9ZKH

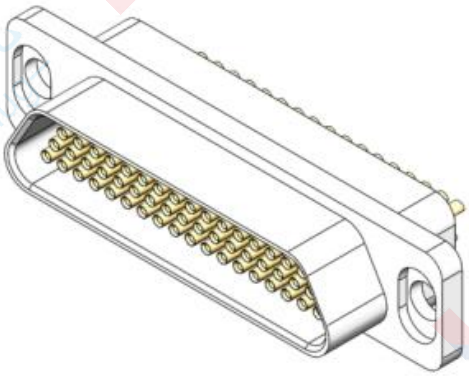

J29M-51ZKH

Product Outline Dimension Drawing

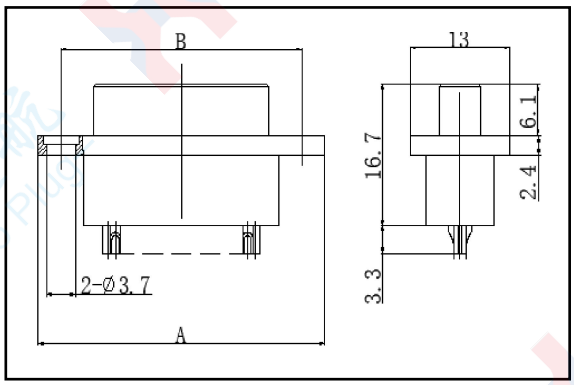

J29M-9、15、21、25、31、37TJH

Product Outline Dimension Drawing

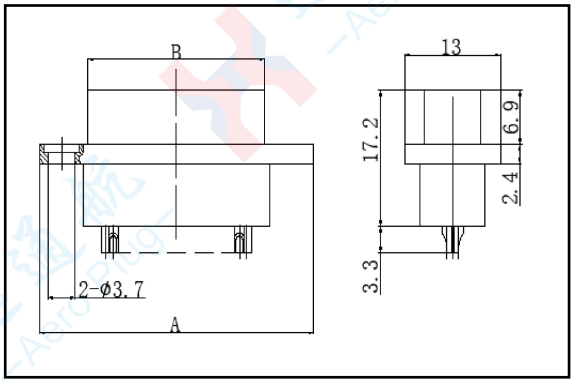

J29M-9、15、21、25、31、37ZKH

Product Outline Dimension Drawing

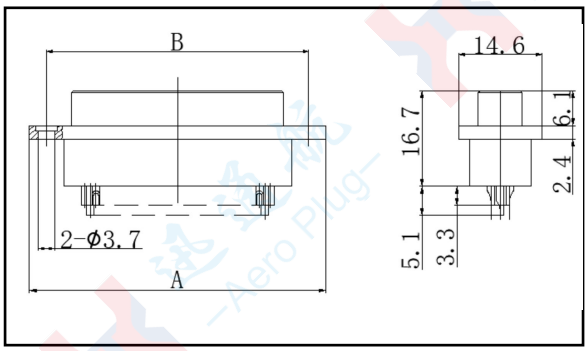

J29M-51、66TJH

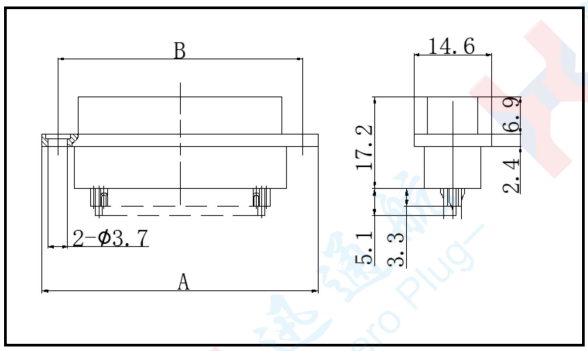

J29M-51、66ZKH

series spectrum	A	B	series spectrum	A	B
J29M-9TJH	26.1	20.1	J29M-9ZKH	26.1	20.1
J29M-15TJH	31.6	25.6	J29M-15ZKH	31.6	25.6
J29M-21TJH	37.3	31.3	J29M-21ZKH	37.3	31.3
J29M-25TJH	42	36	J29M-25ZKH	42	36
J29M-31TJH	47.8	41.8	J29M-31ZKH	47.8	41.8
J29M-37TJH	53.5	47.5	J29M-37ZKH	53.5	47.5
J29M-51TJH	52	46	J29M-51ZKH	52	46
J29M-66TJH	61.5	55.5	J29M-66ZKH	61.5	55.5

J29A Locking Assembly / J29A Free End Locking Assembly
J29A Free End Locking Assembly
. L-Type Locking Assembly

Assembly Diagram

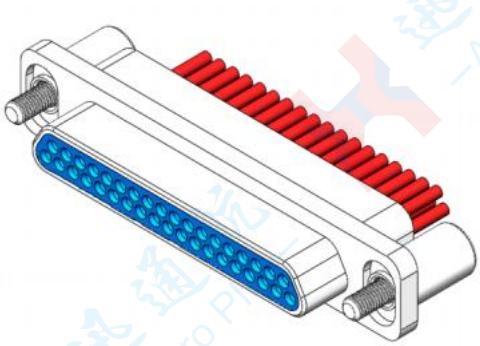

Product Outline Dimension Drawing

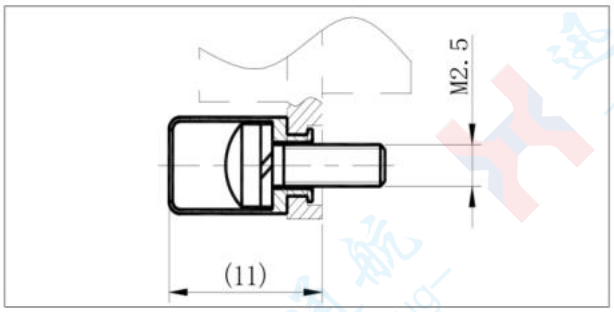

.Applicable to L-Type Locking Assembly

Locking Assembly	Compatible Fixed End Locking Assembly
L-Type	Types P, P1, P3, P4, P5, P8, P9, P11, P12, P13, P14, P15, P16

.Types L1 and L2 Locking Assemblies

Installation Diagram (Tail Cover Assembly Installed as Shown)

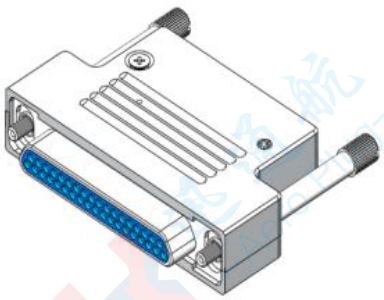

Product Outline Dimension Drawing

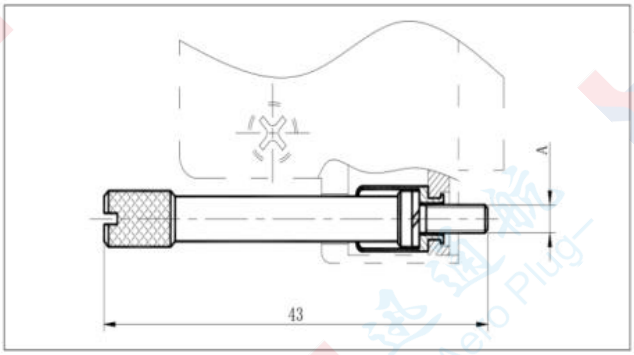

.Compatibility Chart and Outline Drawings for Types L1 and L2 Locking Assemblies

Free End Locking Assembly	Compatible Fixed End Locking Assembly	Compatible Tail Cover Assembly	A
L1-Type	Types P、P1、P3、P4、P5、P8、P9、P11 ~ P16	Types D, D1, D2	M2.5
L2-Type	P6-Type	Types D, D1, D2	0.099-48UNC-2A

.L3-Type Locking Assembly

Installation Diagram (Tail Cover Assembly Installed as Shown)

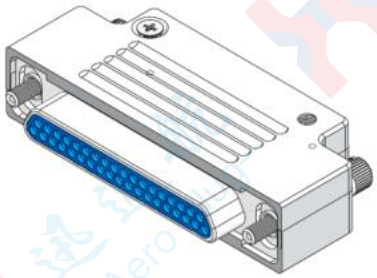

Product Outline Dimension Drawing

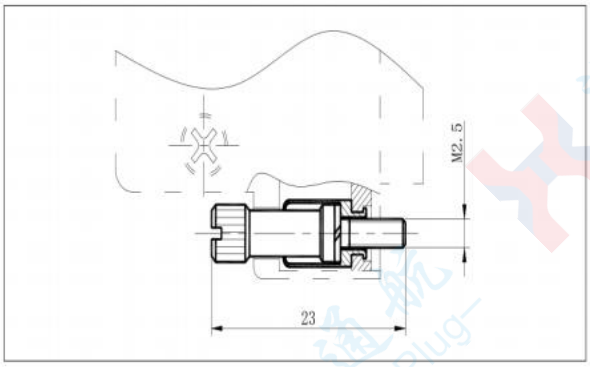

.L3-Type Locking Assembly Compatibility Table

Free End Locking Assembly	Compatible Fixed End Locking Assembly	Compatible Tail Cover Assembly
L3-Type	Types P、P1、P3、P4、P5、P8、P9、P11～P16	Types D、D1、D2

J29A Locking Assembly / J29A Free End & Fixed End Locking Assemblies

. L4-Type Locking Assembly

Installation Diagram (Tail Cover Assembly Installed as Shown)

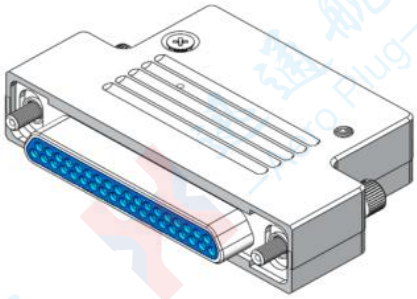

Product Outline Dimension Drawing

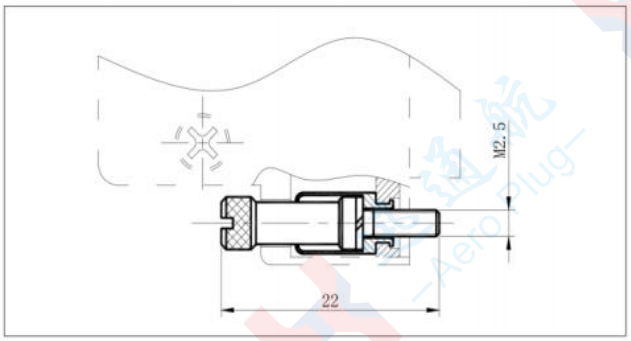

.L4-Type Locking Assembly Compatibility Table

Free End Locking Assembly	Compatible Fixed End Locking Assembly	Compatible Tail Cover Assembly
L4Type	Types P、P1、P3、P4、P5、P8、P9、P11～P16	Types D、D1、D2

J29A Locking Assembly / J29A Free End & Fixed End Locking Assemblies

.P-Type Locking Assembly

The P-Type Locking Assembly is used for edge mounting of the "-A" type right-angle pin printed circuit board series products, without a mounting plate.

For the P-Type Locking Assembly, the part of the insert nut that extends beyond its bracket is round. Its mounting screws are suitable for products where the mating face of the housing flange is equipped with a counterbore.。

Installation Diagram

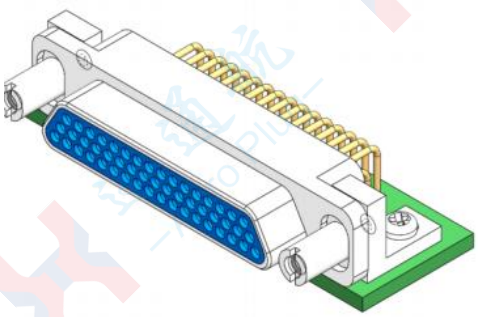

Product Outline Dimension Drawing

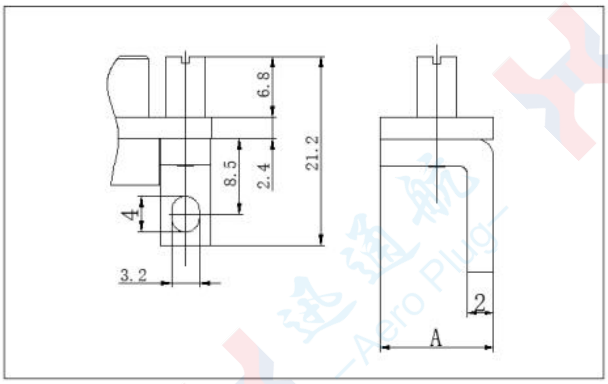

.P-Type Locking Assembly Compatibility Table

Fixed-End Locking Condition	Compatible Fixed End Locking Assembly	A	Compatible Free End Locking Assembly
P-Type	Types L1、L2、L3、L4	8.8	9～37core
		10.7	51～66core

.P15-Type Locking Assembly

The P15 Locking Assembly is only suitable for the edge mounting method of the J29A-□TJW/ZKW/TJW1/ZKW1 right-angle pin printed circuit board series products, without a mounting plate.

Assembly Diagram

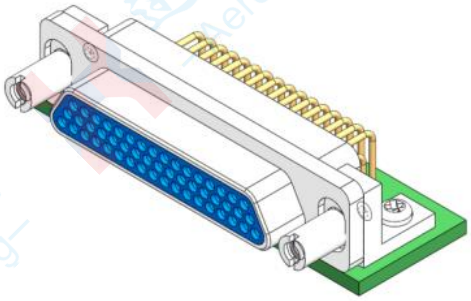

Product Outline Dimension Drawing

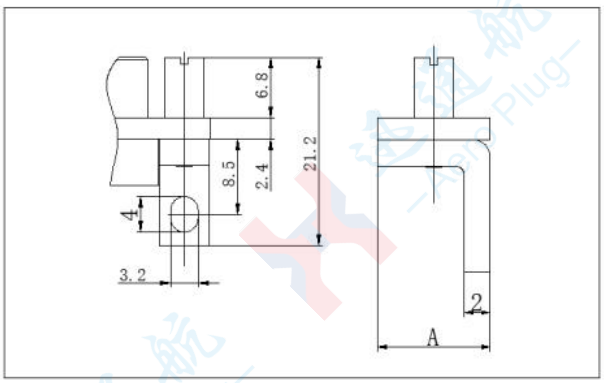

.P15-Type Locking Assembly Compatibility Table

Fixed-End Locking Condition	Compatible Fixed End Locking Assembly	A	Compatible Free End Locking Assembly
P-Type	Types L1、L2、L3、L4	10	9～37core
		12	51～66core

.P1-Type Locking Assembly

The P1-Type Locking Assembly is mainly used for the rear-panel mounting method of crimping and soldering series products that require matching with a tail cover, with a mounting plate thickness of 2.3mm.

Installation Diagram

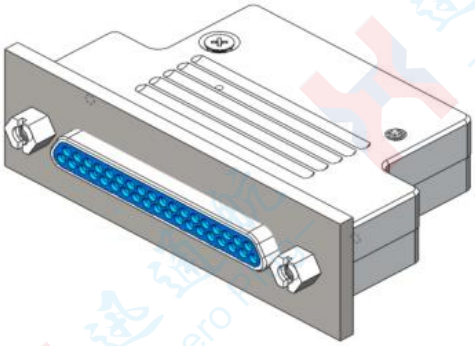

Product Outline Dimension Drawing

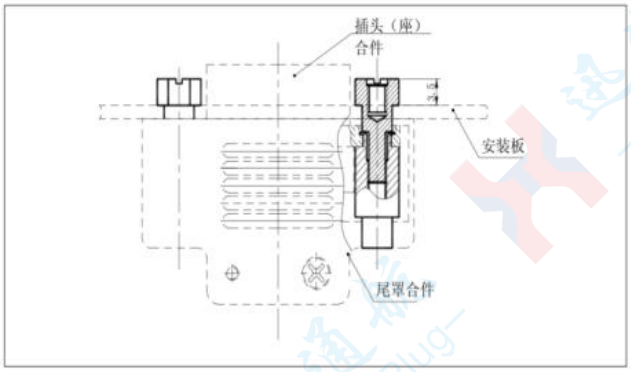

.P1-Type Locking Assembly Compatibility Table

Free-End Locking Assembly	Compatible Fixed-End Locking Assembly	Compatible Tail Cover Assembly
P1-Type	Type L1, Type L2, Type L3, Type L4	Type D, Type D1, Type D2

.P3-Type & P6-Type Locking Assemblies

The P3-Type and P6-Type Locking Assemblies are only suitable for the rear-panel edge mounting method of the J29A-□TJW/ZKW/TJW1/ZKW1 right-angle pin printed circuit board series products, with a mounting plate thickness of 0.8mm.

P3-Type & P6-Type Locking Assemblies with Insert Nut Brackets

Installation Diagram

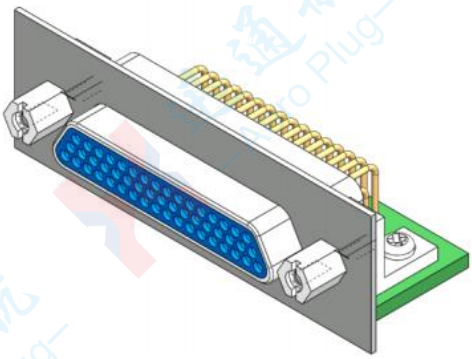

Product Outline Dimension Drawing

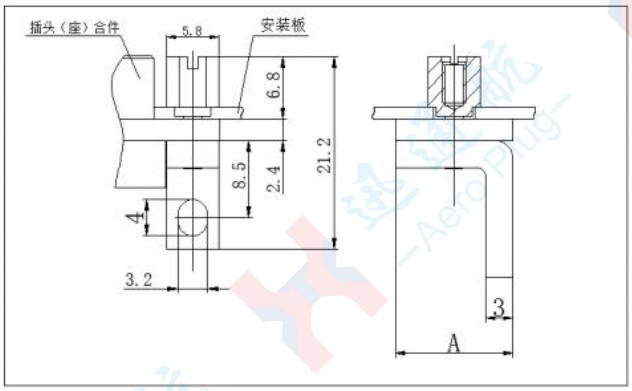

.P3-Type & P6-Type Locking Assemblies Compatibility Table

Fixed-End Locking Assembly	Compatible Fixed-End Locking Assembly	A	B	note
Type P3 (Metric Thread)	Type L, Type L1, Type L3, Type L4	10	M2.5-6H	9-37 core
		12	M2.5-6H	51-66 core
Type P6 (Imperial Thread)	L2	10	0.099-48UNC-2B	9-37 core
		12	0.099-48UNC-2B	51-66 core

J29A Locking Assembly / J29A Fixed-End Locking Assembly

.Type P4 and Type P13 Locking Assemblies

The Type P4 Locking Assembly is exclusively suitable for the rear-panel edge mounting of J29A-□TJW/ZKW/TJW1/ZKW1 right-angle pin printed circuit board series products, with a mounting plate thickness of 2.5mm.

The Type P13 Locking Assembly is exclusively suitable for the rear-panel edge mounting of J29A-□TJW/ZKW/TJW1/ZKW1 right-angle pin printed circuit board series products, with a mounting plate thickness of 2mm

Type P4 and Type P13 Locking Assemblies with Insert Nut Brackets

Assembly Diagram

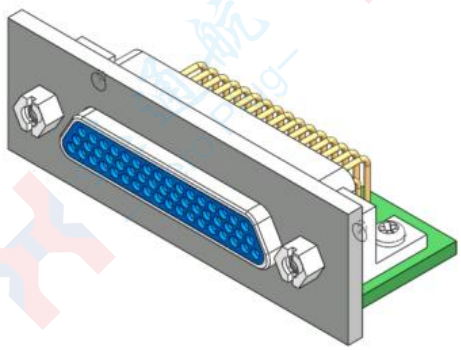

Product Outline Dimension Drawing

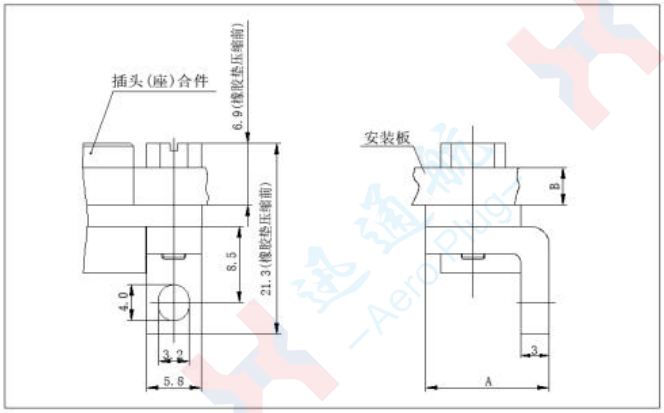

.Compatibility Table for Type P4 and Type P13 Locking Assemblies

Fixed-End Locking Assembly	Compatible Fixed-End Locking Assembly	A	B	note
Type P4	Type L, Type L1, Type L3, Type L4	10	2.5	9-37 core
		12	2	51-66 core
Type P13	Type L, Type L1, Type L3, Type L4	10	2.5	9-37 core
		12	2	51-66 core

.Type P5 Locking Assembly

The Type P5 Locking Assembly is used for the front-panel mounting of Type J29M sealed products, with a mounting plate thickness of ≤4mm and is equipped with a conductive rubber gasket.

Assembly Diagram

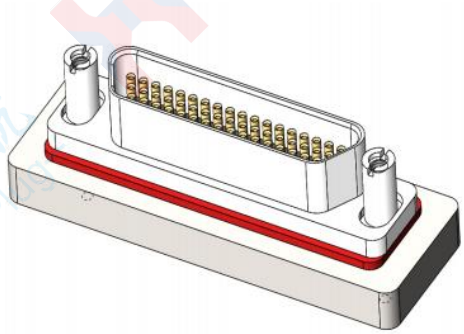

Product Outline Dimension Drawing

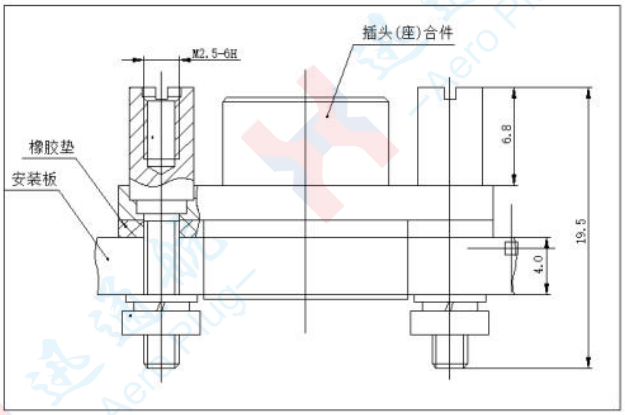

.Matching Table for Type P5 Locking Assembly

Fixed-End Locking Assembly	Compatible Fixed-End Locking Assembly
Type P5	Type L, Type L1, Type L3, Type L4

J29A Locking Assembly / J29A Fixed-End Locking Assembly

.Type P8 Locking Assembly

The Type P8 Locking Assembly is used for front-panel mounting, with a mounting plate thickness of ≤4.5mm.

Assembly Diagram

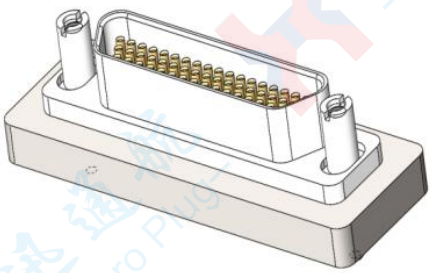

Product Outline Dimension Drawing

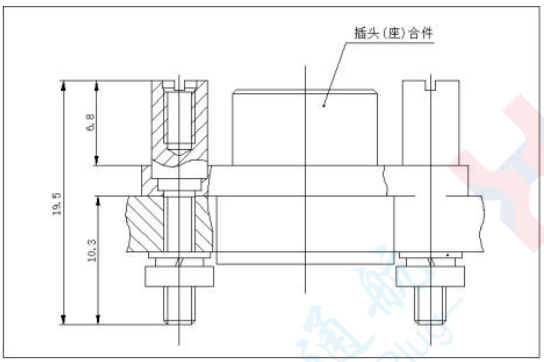

.Compatibility Table for Type P8 Locking Assembly

Fixed-End Locking Assembly	Compatible Fixed-End Locking Assembly
Type P8	Type L, Type L1, Type L3 and Type L4

.Type P9 and Type P11 Locking Assemblies

The Type P9 Locking Assembly is suitable for straight printed circuit board series products, with a printed circuit board thickness of ≤2.5mm; it is equipped with an 8mm-long support sleeve and no mounting plate.
The Type P11 Locking Assembly is suitable for straight pin printed circuit board series products, with a printed circuit board thickness of 2.5mm～3.5mm; it is equipped with a 7.2mm-long support sleeve and no mounting plate.

Assembly Diagram

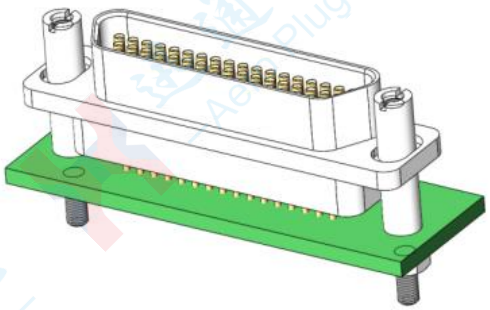

Product Outline Dimension Drawing

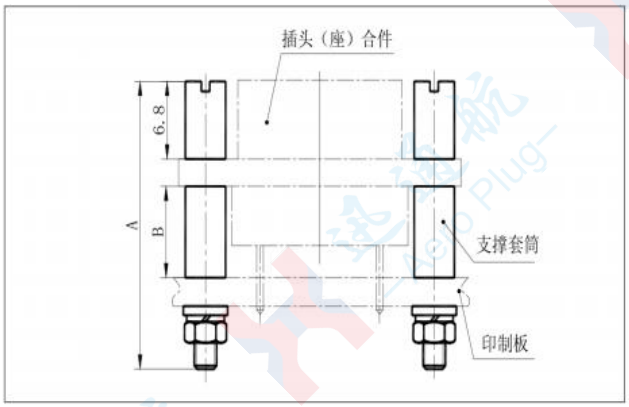

.Compatibility Table and Overall Dimensions for Type P9 and Type P11 Locking Assemblies

Free-End Locking Assembly	Compatible Fixed-End Locking Assembly	A	B
Type P9	Type L, Type L1, Type L3 and Type L4	27	8
Type P11	Type L, Type L1, Type L3 and Type L4	24	7.2

J29A Locking Assembly / J29A Fixed-End Locking Assembly

.Type P12 Locking Assembly

The Type P8 Locking Assembly is used for front-panel mounting, featuring an interface sealing function with a thread depth of ≥5mm.

Assembly Diagram

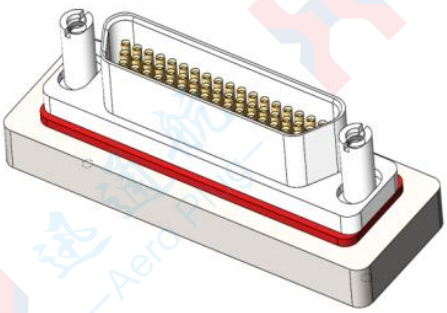

Product Outline Dimension Drawing

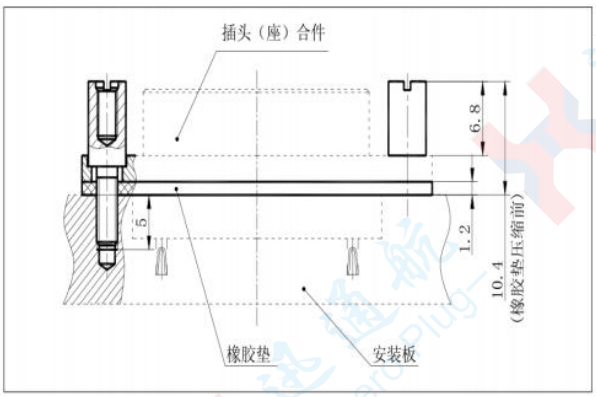

.Compatibility Table for Type P12 Locking Assembly

Fixed-End Locking Assembly	Compatible Fixed-End Locking Assembly
Type P12	Type L, L1, L3, L4

.Type P14 and Type P16 Locking Assemblies

The Type P14 Locking Assembly is suitable for the rear-panel mounting of crimp and solder series products, with a mounting plate thickness of 2mm ~ 2.5mm.
The Type P16 Locking Assembly is suitable for the rear-panel mounting of crimp and solder series products, with a mounting plate thickness of 1mm ~ 1.5mm.

Assembly Diagram

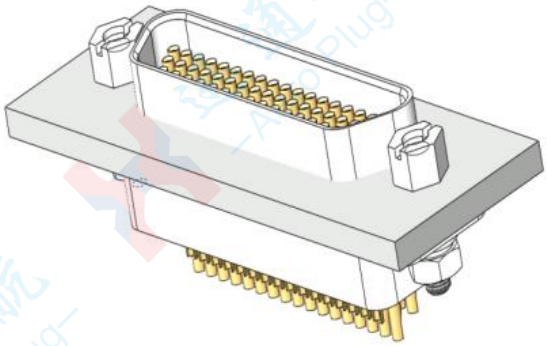

Product Outline Dimension Drawing

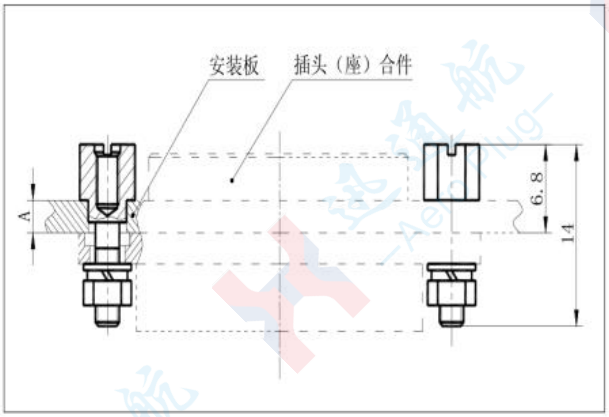

.Compatibility Table for Type P14 and Type P16 Locking Assemblies

Free-End Locking Assembly	Compatible Fixed-End Locking Assembly	A
Type P14	Types L, L1, L3 and L4	2 ~ 2.5mm
Type P16	Types L, L1, L3 and L4	1 ~ 1.5mm

J29A Accessories / J29A Boot Assembly

. Type D Boot Assembly

The Type D Boot Assembly is suitable for standard crimp and solder series products.
The Type D Boot Assembly adopts a two-piece structure and is equipped with a built-in cable clamp.

Three-dimensional Diagram of Type D Boot Assembly

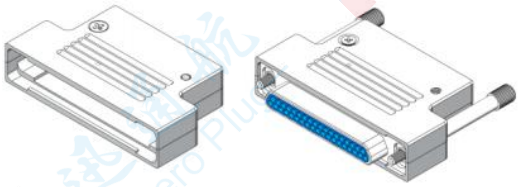

装入产品前　　装入产品后

Outline Dimension Drawing of Type D Boot Assembly

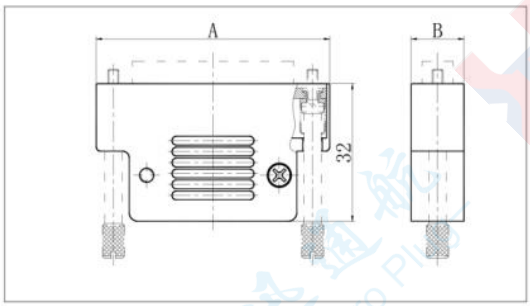

Applicable Products	A	B	Applicable Products	A	B
J29A-9	27.8	15	J29A-31	49.6	15
J29A-15	33.3	15	J29A-37	55.3	15
J29A-21	38.9	15	J29A-51	53.8	16.6
J29A-25	43.8	15	J29A-66	63.3	16.6

. Type D1 Boot Assembly

The Type D1 Boot Assembly is suitable for standard crimp series products.

The Type D1 Boot Assembly adopts a two-piece structure and is not equipped with a cable clamp

Isometric Drawing of Type D1 Boot Assembly

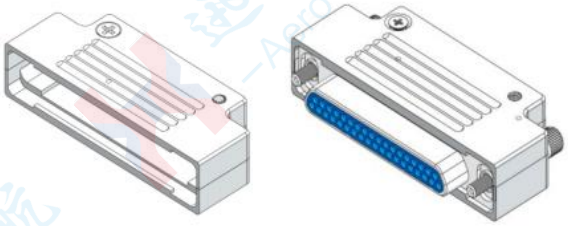

装入产品前　　装入产品后

Outline Dimension Drawing of Type D1 Boot Assembly

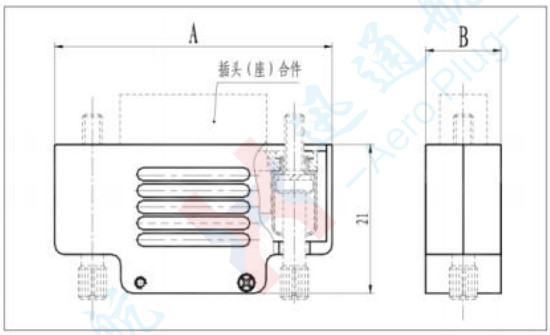

Applicable Products	A	B	Applicable Products	A	B
J29A-9	27.8	15	J29A-31	49.6	15
J29A-15	33.3	15	J29A-37	55.3	15
J29A-21	38.9	15	J29A-51	53.8	16.6
J29A-25	43.8	15	J29A-66	63.3	16.6

J29A Accessories / J29A Boot Assembly & Mounting Plate Hole Dimensions

. Type D2 Boot Assembly

The Type D2 Boot Assembly is suitable for Type - A1 crimp and solder series products.

The Type D2 Boot Assembly adopts a two-piece structure and is equipped with a built-in cable clamp.

Isometric Drawing of Type D2 Boot Assembly

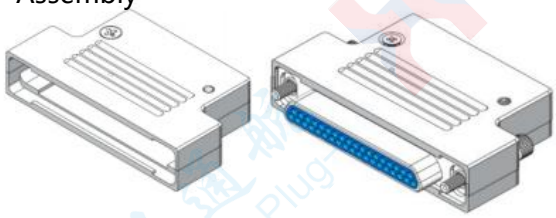

装入产品前　　装入产品后

Outline Dimension Drawing of Type D2 Boot Assembly

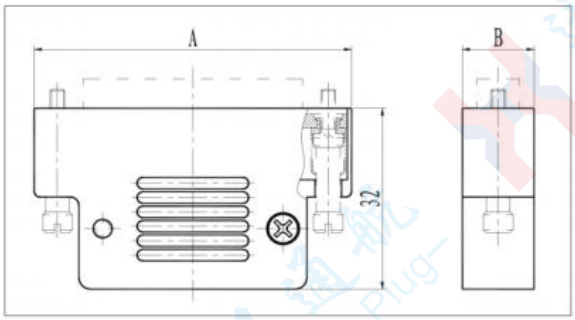

Applicable Products	A	B	Applicable Products	A	B
J29A-9	27.8	13	J29A-31	49.6	13
J29A-15	33.3	13	J29A-37	55.3	13
J29A-21	38.9	13	J29A-51	53.8	14.6
J29A-25	43.8	13	J29A-66	63.3	14.6

Mounting Plate Hole Dimensions for J29A Series

Front-Panel Mounting Hole Dimensions

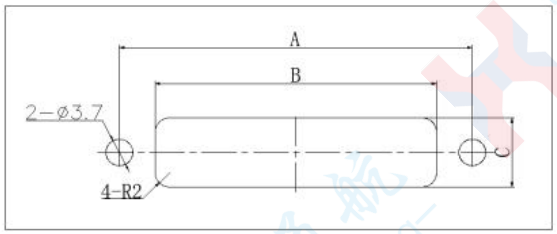

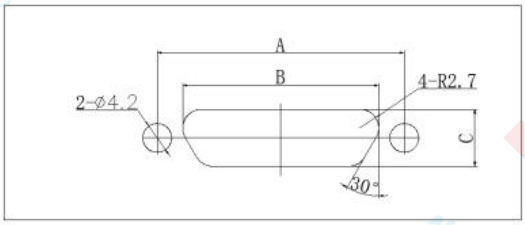

Series Spectrum	A	B	C
9 - Contact	20.1	14.4	9
15 - Contact	25.6	19.9	9
21 - Contact	31.3	25.6	9
25 - Contact	36	30.1	9
31 - Contact	41.8	35.9	9
37 - Contact	47.5	41.6	9
51 - Contact	46	40.1	10.9
66 - Contact	55.5	49.6	10.9

Series Spectrum	A	B	C
9 - Contact	20.1	13.3	7
15 - Contact	25.6	18.8	7
21 - Contact	31.3	24.5	7

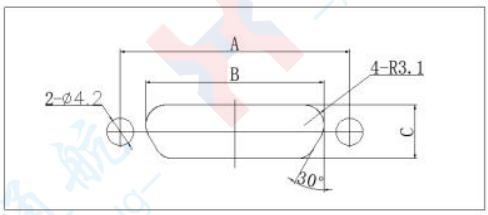

Series Spectrum	A	B	C
25 - Contact	36	29.2	7.9
31 - Contact	41.8	35	7.9
37 - Contact	47.5	40.7	7.9
51 - Contact	46	39.2	9.6
66 - Contact	55.5	48.7	9.6

Mounting Plate Hole Dimensions for Printed Circuit Boards of J29A Series Micro Rectangular Electrical Connectors / J29A-N Series

J29A Through-Hole PCB Series

.J29A-9TJN

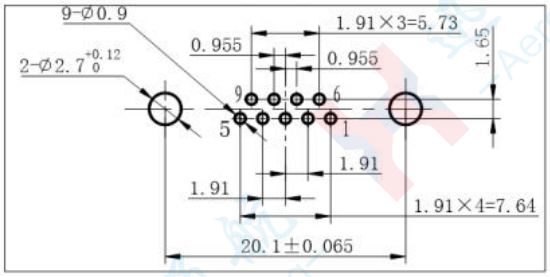

.J29A-9ZKN

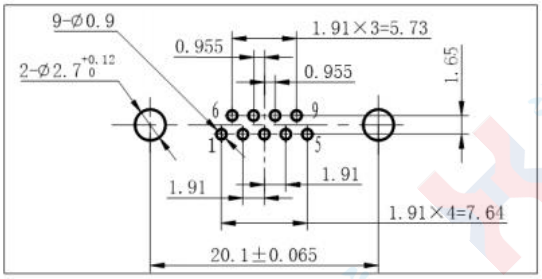

.J29A-15TJN

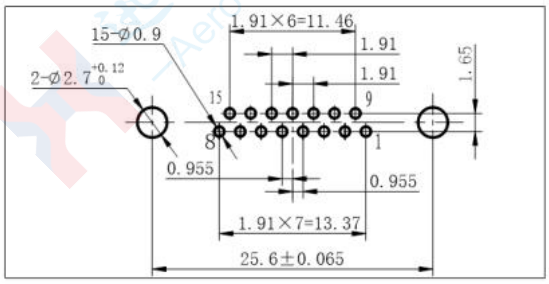

.J29A-15ZKN

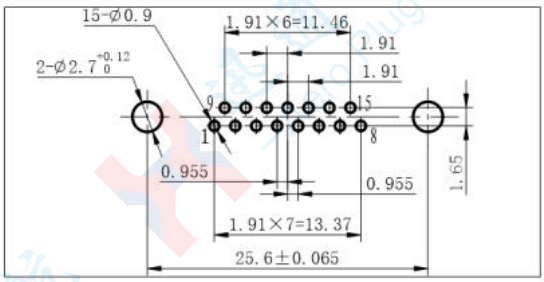

.J29A-21TJN

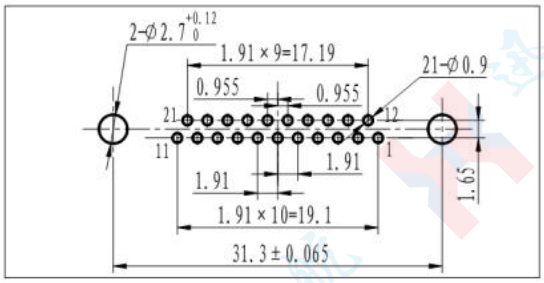

.J29A-21ZKN

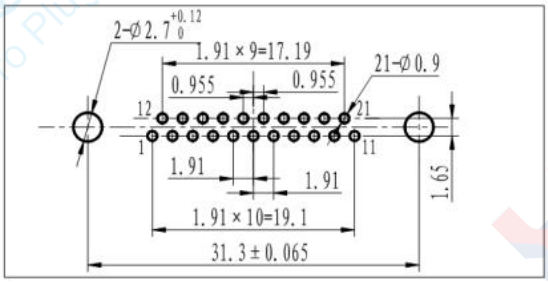

.J29A-25TJN

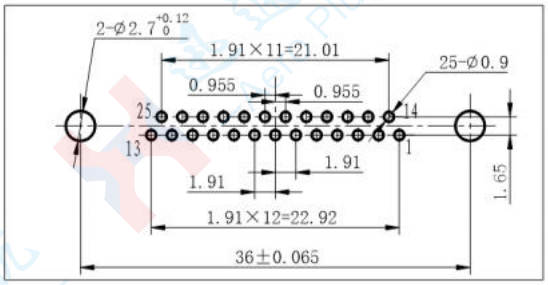

.J29A-25ZKN

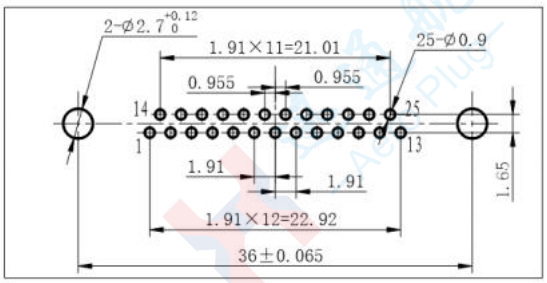

.J29A-31TJN

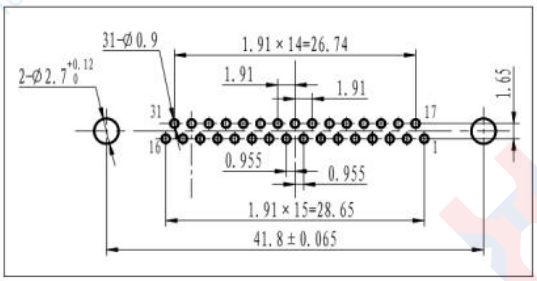

.J29A-31ZKN

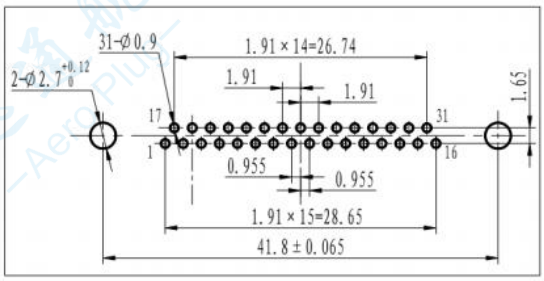

.J29A-37TJN

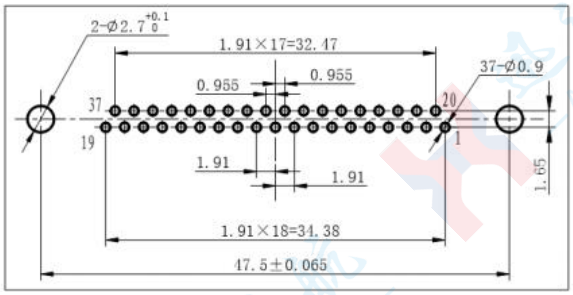

.J29A-37ZKN

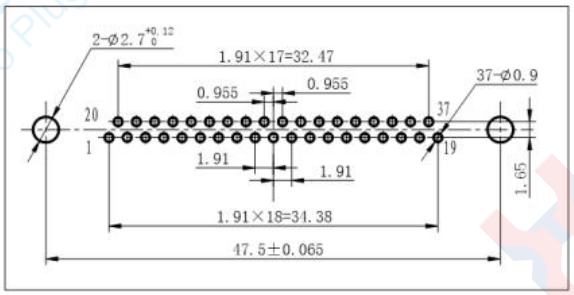

.J29A-51TJN

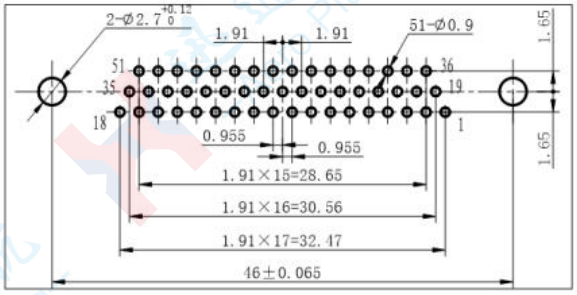

.J29A-51ZKN

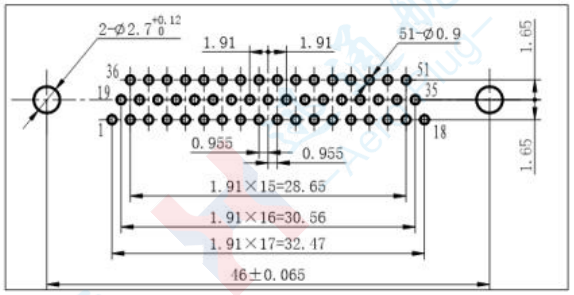

.J29A-66TJN

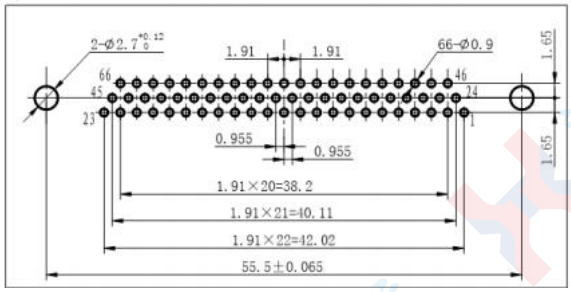

.J29A-66ZKN

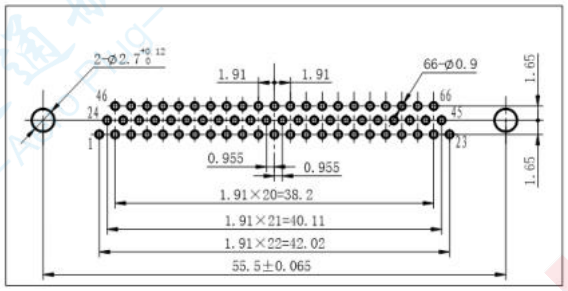

Mounting Plate Hole Dimensions for Printed Circuit Boards of J29A Series Micro Rectangular Electrical Connectors / J29A-W Series

J29A Right-Angle PCB Series

.J29A-9TJW、J29A-9TJW-A

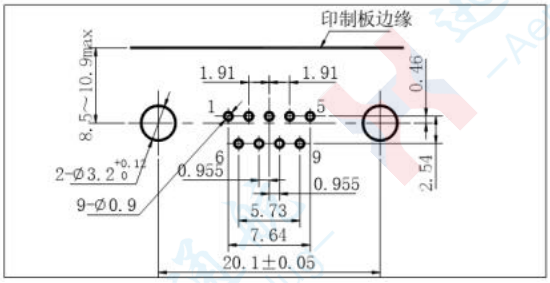

.J29A-9ZKW、J29A-9ZKW-A

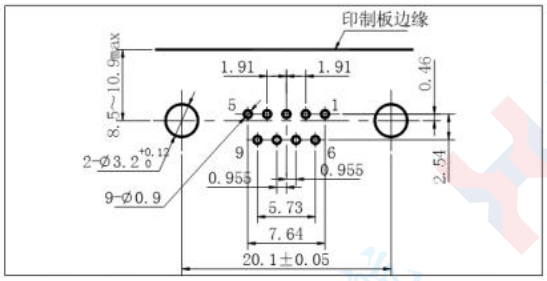

.J29A-15TJW、J29A-15TJW-A

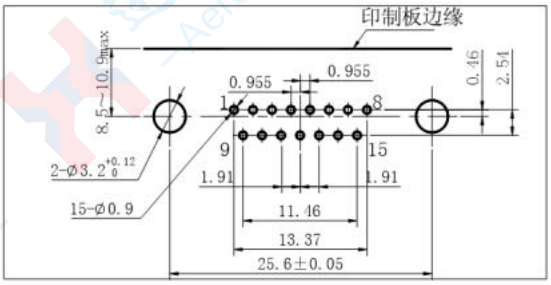

.J29A-15ZKW、J29A-15ZKW-A

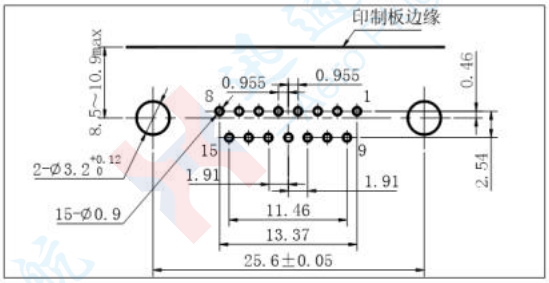

.J29A-21TJW、J29A-21TJW-A

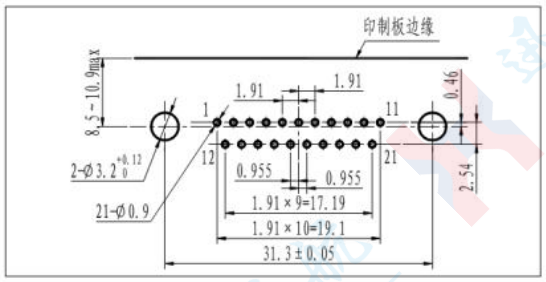

.J29A-21ZKW、J29A-21ZKW-A

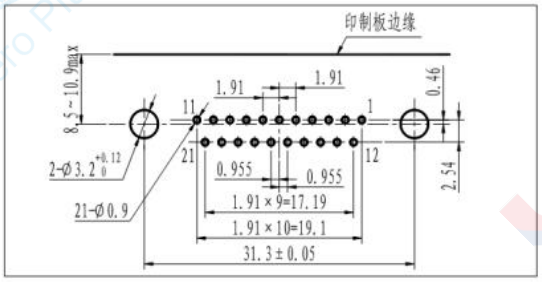

.J29A-25TJW、J29A-25TJW-A

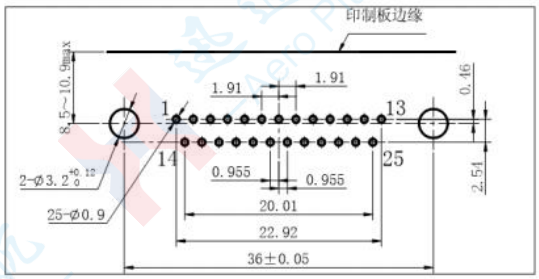

.J29A-25ZKW、J29A-25ZKW-A

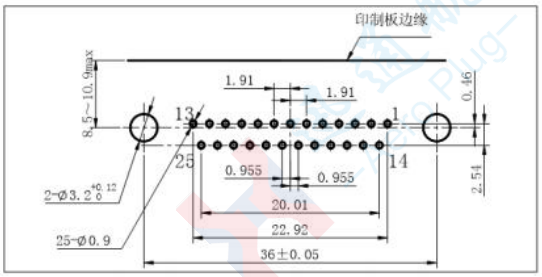

.J29A-31TJW、J29A-31TJW-A

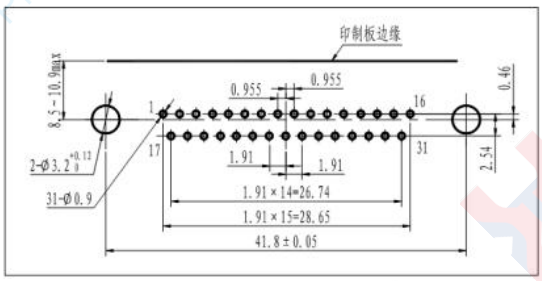

.J29A-31ZKW、J29A-31ZKW-A

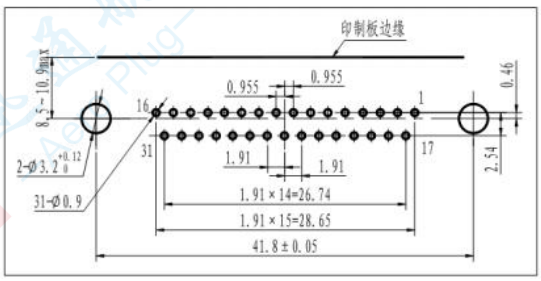

.J29A-37TJW、J29A-37TJW-A

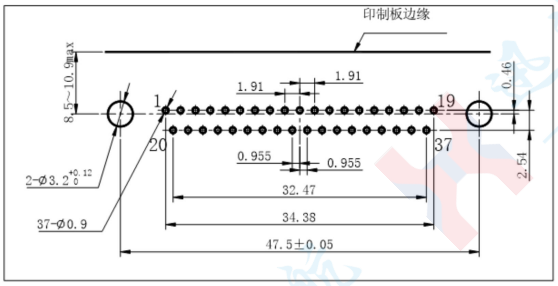

.J29A-37ZKW、J29A-37ZKW-A

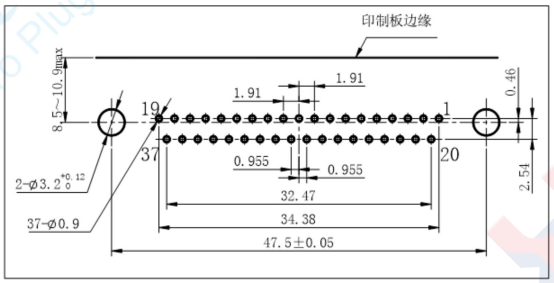

.J29A-51TJW、J29A-51TJW-A

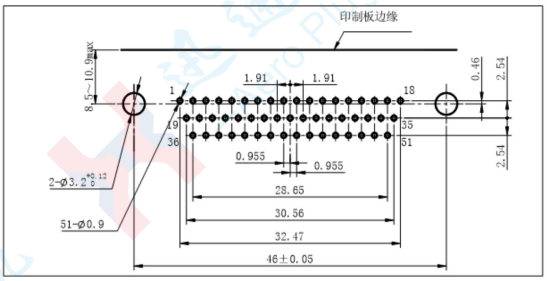

.J29A-51ZKW、J29A-51ZKW-A

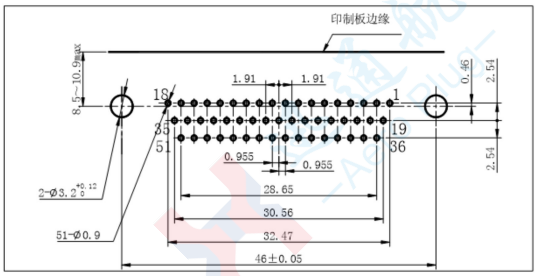

.J29A-66TJW、J29A-66TJW-A

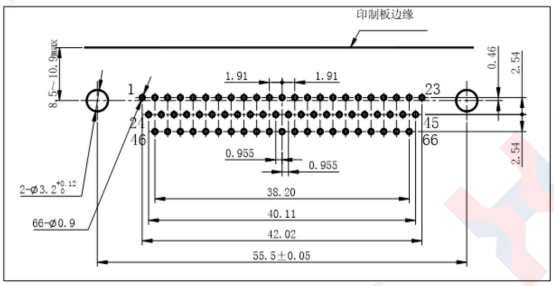

.J29A-66ZKW、J29A-66ZKW-A

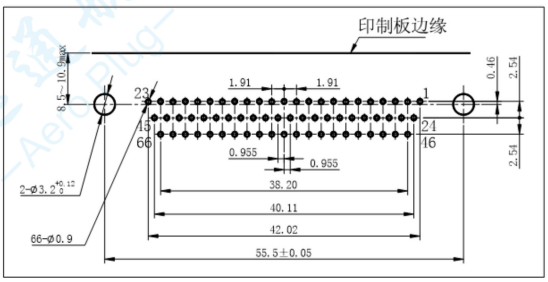

Mounting Plate Hole Dimensions for Printed Circuit Boards of J29A Series Micro Rectangular Electrical Connectors / J29A-WI Series

J29A Right-Angle PCB WI Series

.J29A-9TJWI 、J29A-9TJWI -A

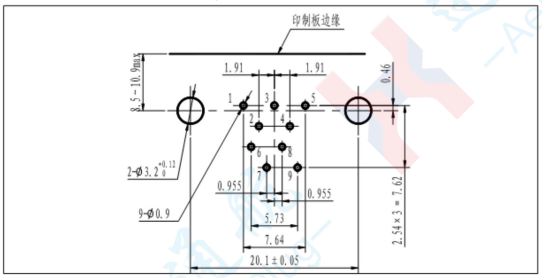

.J29A-9ZKWI 、J29A-9ZKWI -A

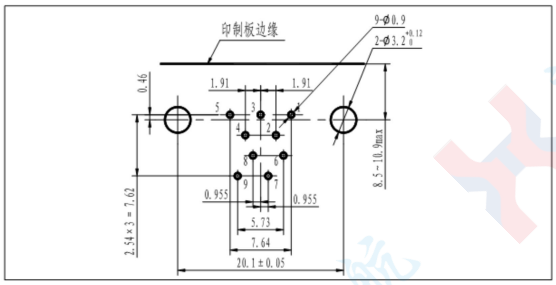

.J29A-15TJWI 、J29A-15TJWI -A

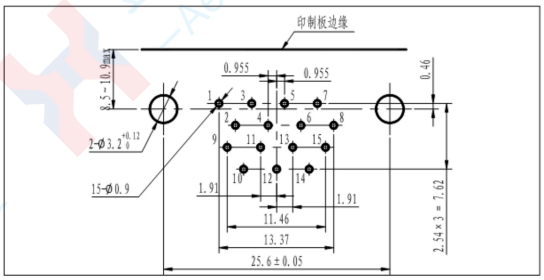

.J29A-15ZKWI 、J29A-15ZKWI -A

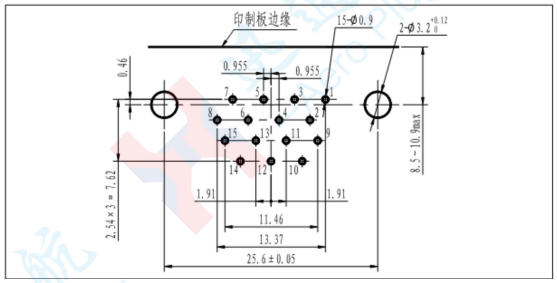

.J29A-21TJWI 、J29A-21TJWI -A

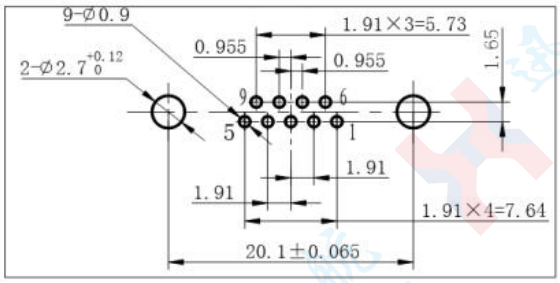

.J29A-21ZKWI 、J29A-21ZKWI -A

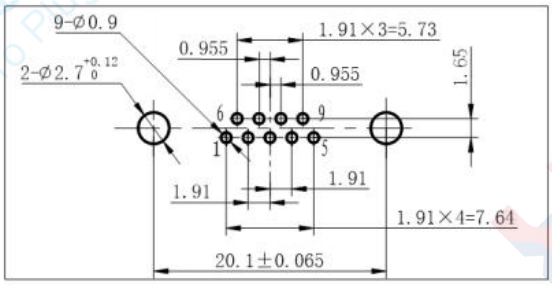

.J29A-25TJWI 、J29A-25TJWI -A

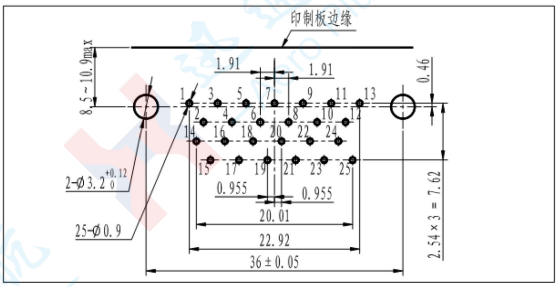

.J29A-25ZKWI 、J29A-25ZKWI -A

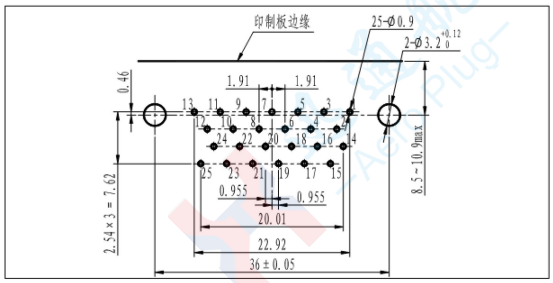

.J29A-31TJWI 、J29A-31TJWI -A

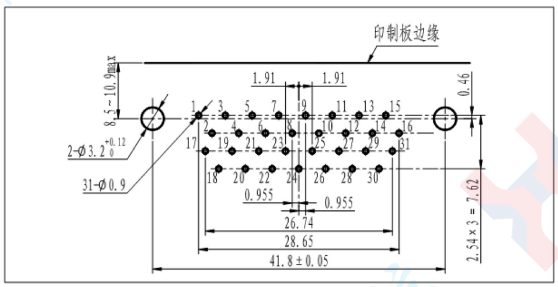

.J29A-31ZKWI 、J29A-31ZKWI -A

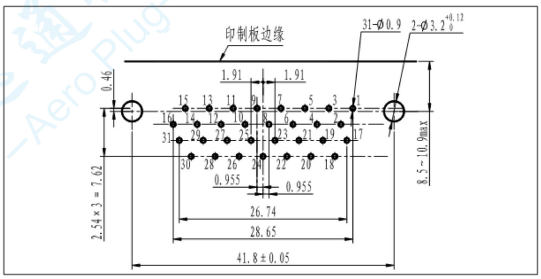

.J29A-37TJWl 、J29A-37TJWl -A

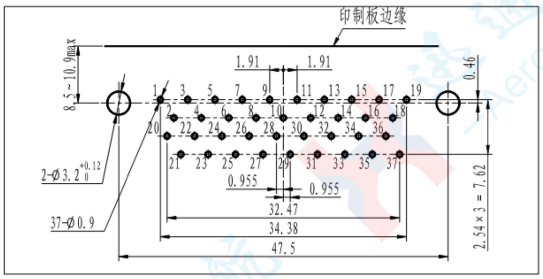

.J29A-37ZKWl 、J29A-37ZKWl -A

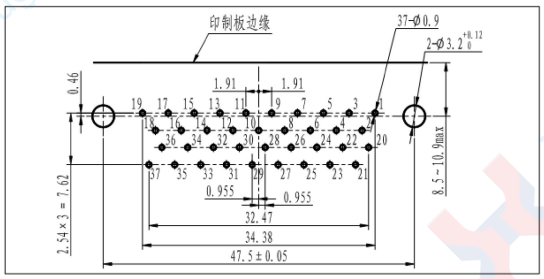

.J29A-51TJWl 、J29A-51TJWl -A

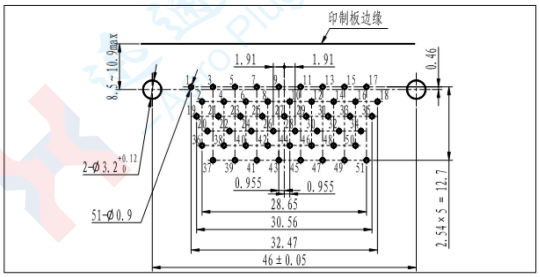

.J29A-51ZKWl 、J29A-51ZKWl -A

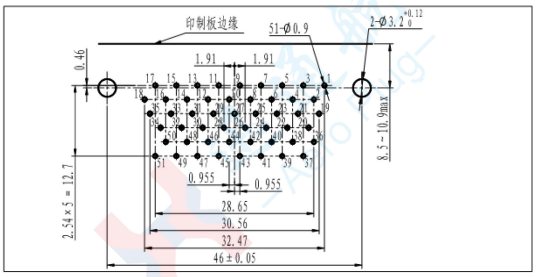

.J29A-66TJWl 、J29A-66TJWl -A

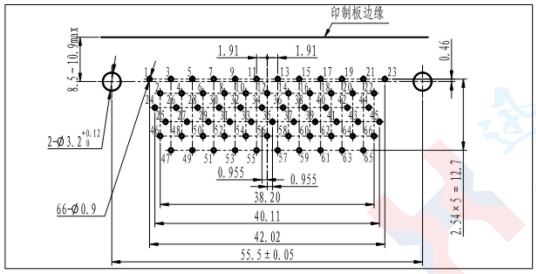

.J29A-66ZKWl 、J29A-66ZKWl -A

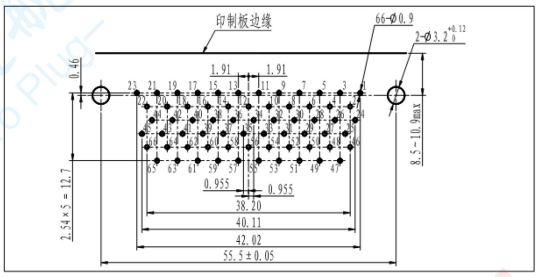

J30V2 Micro-Rectangular Electrical Connector

Product Features

- Seven core configurations available: 9, 15, 21, 25, 31, 37, and 51 contacts.
- Plug adopts twisted pins with a pitch of 1.27mm, featuring high density, miniaturization, and high reliability.
- Base material: PPS (Polyphenylene Sulfide), offering excellent environmental resistance.
- Suitable wire core cross-sectional area: 0.1mm² ~ 0.15mm².
- Product performance complies with GJB2446, equivalent to U.S. military standard MIL-DTL-83513.
- Locking components of this series are supplied as fixed sets.
- Executive standard: Detailed Specification for J30V2 Series Micro Rectangular Electrical Connectors.

Technical Characteristics

- Operating Temperature: -55℃ ~ +125℃
- Vibration: 10Hz ~ 2000Hz 196m/s²
- Random vibration: Power spectral density 0.4G²/Hz, total acceleration RMS 23.1G
- Shock: 735m/s² 11ms
- Rated current: 3A
- Contact resistance: ≤ 10mΩ
- Insulation resistance: ≥ 5000MΩ
- Dielectric withstanding voltage: 800V
- Mechanical life: 500 mating cycles

Product Series Spectrum Arrangement

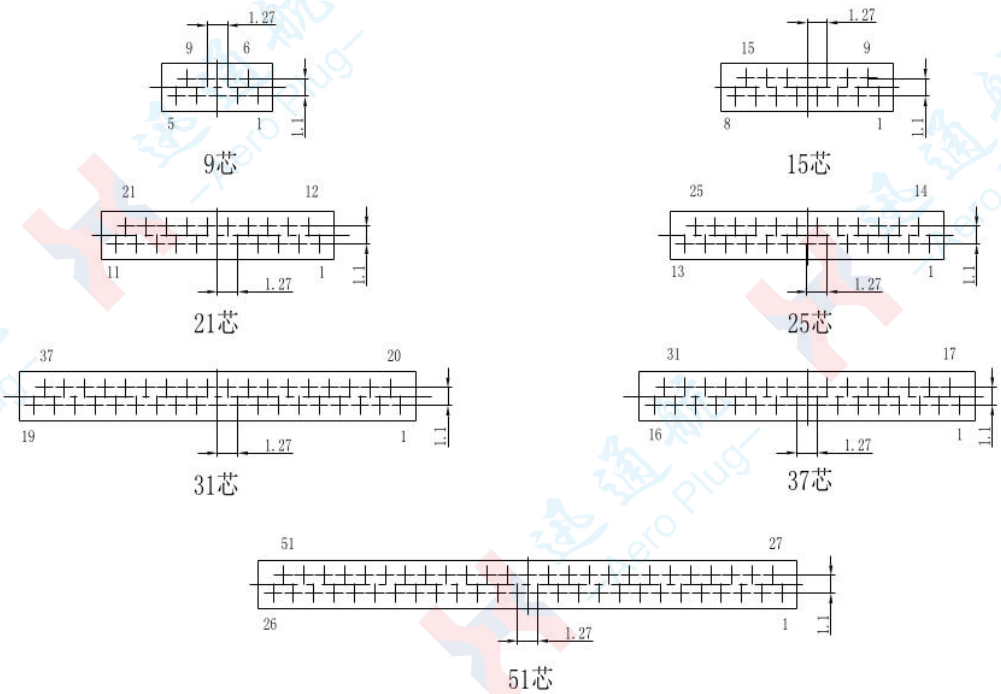

Note: Viewed from the mating end of the plug

Model Nomenclature

J30V2 - X TJ/ZK - X - X
① ② ③ ④ ⑤

①General Designation: J30V2

② Number of Contacts: 9、15、21、25、31、37、51

③Contact Type: TJ - Plug-mounted pins

ZK - Socket-mounted sockets

TJ and ZK are fixed pairs

④Cable End Type: No letter - Crimp termination S -Solder termination

N - Through-hole PCB W - Right-angle PCB

⑤Locking Component Type (Locking components are non-interchangeable; base type is fixed once the locking component is selected):

L1—Equipped with M1.6 standard screw accessories

P1—Equipped with vertical mounting screw accessories

P2—Equipped with mounting bracket and coupling nut accessories

P3—Equipped with support sleeve and vertical mounting nut

P4—Equipped with mounting bracket and horizontal solder-mount accessories

P6—Equipped with extended support sleeve and vertical mounting screw (extended version of P3)

P7—Equipped with coupling nut accessories (for locking only, no mounting function)

■J30V2 Crimp Termination Series

J30V2 - X TJ/ZK - X
① ② ③ ④

①General Designation: J30V2

②Number of Contacts: 9、15、21、25、31、37、51

③Contact Type: TJ - Plug-mounted pins; ZK -Socket-mounted sockets;

④ Locking Component Type (Base type is fixed once the locking component is selected):

L1—Equipped with M1.6 standard screw accessories

P1—Equipped with vertical mounting screw accessories

P2—quipped with mounting bracket and coupling nut accessories

P7—Equipped with coupling nut accessories (for locking only, no mounting function)

Product Outline and Mounting Dimensions

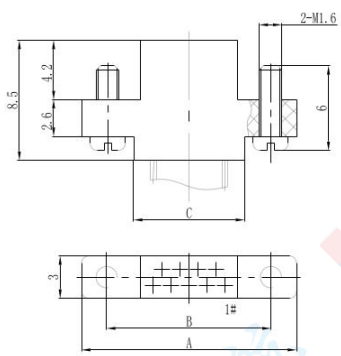

J30V2-×TJ-L1

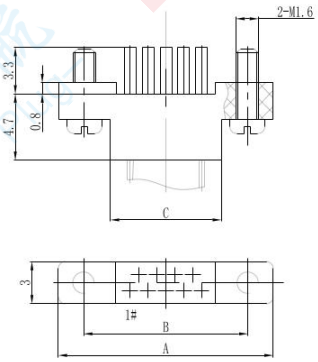

J30V2-×ZK-L1

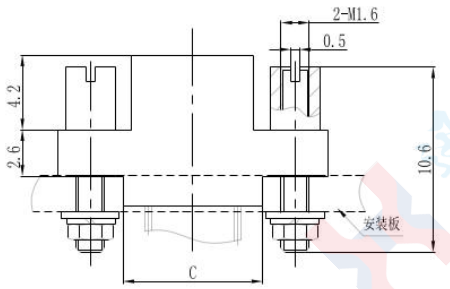

J30V2-×TJ-P1

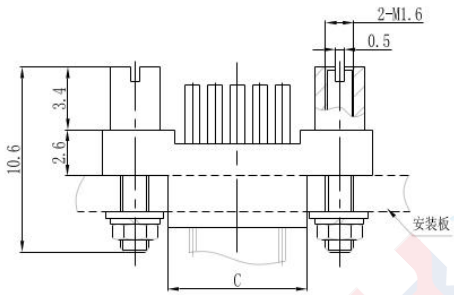

J30V2-×ZK-P1

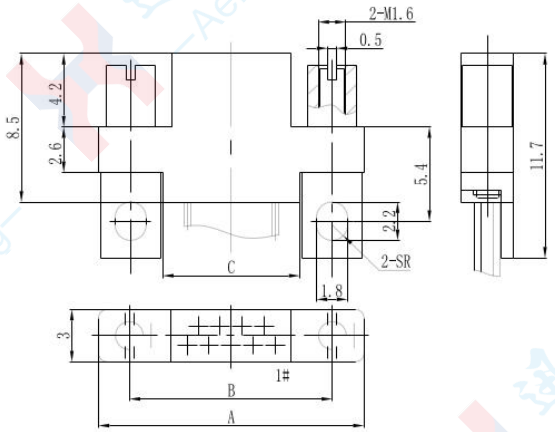

J30V2-×TJ-P2

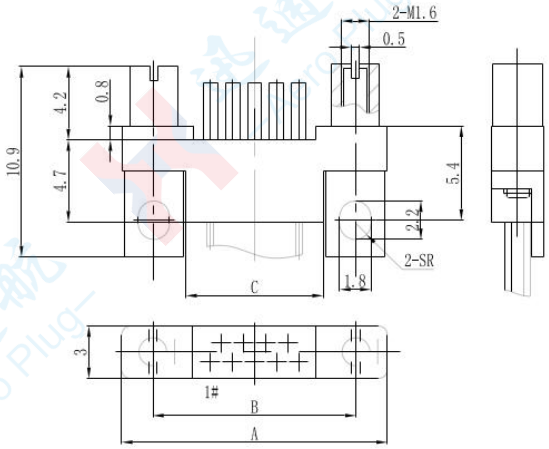

J30V2-×ZK-P2

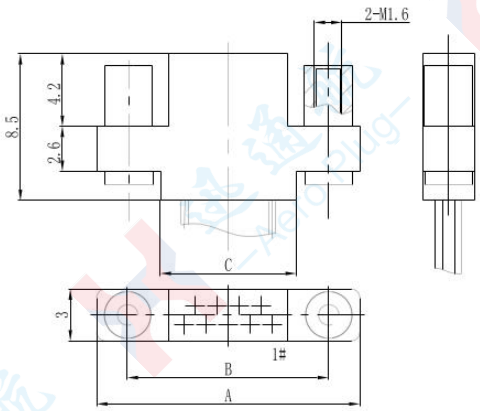

J30V2-×TJ-P7

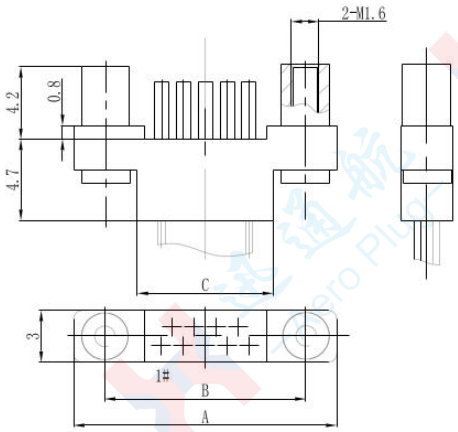

J30V2-×ZK-P7

Number of Contacts	A	B	C	Number of Contacts	A	B	C
9-Contact	15.3	11.7	7.9	31-Contact	29.3	25.7	21.9
15-Contact	19.1	15.5	11.7	37-Contact	33.1	29.5	25.8
21-Contact	22.9	19.3	15.5	51-Contact	42	38.4	34.7
25-Contact	25.5	21.9	18.1				

■ J30V2 Solder Series

J30V2 - X TJ/ZK - S - X

① ② ③ ④ ⑤

①General Designation: J30V2
②Number of Contacts: 9、15、21、25、31、37、51
③Contact Type: TJ - Plug-mounted pins ZK - Socket-mounted sockets
④Solder Series: S
⑤Locking Component Type (Base type is fixed once the locking component is selected))
L1—Equipped with M1.6 standard screw accessories
P1—Equipped with vertical mounting screw accessories
P2—Equipped with mounting bracket and coupling nut accessories
P7—Equipped with coupling nut accessories (for locking only, no mounting function)

Product Outline and Mounting Dimensions

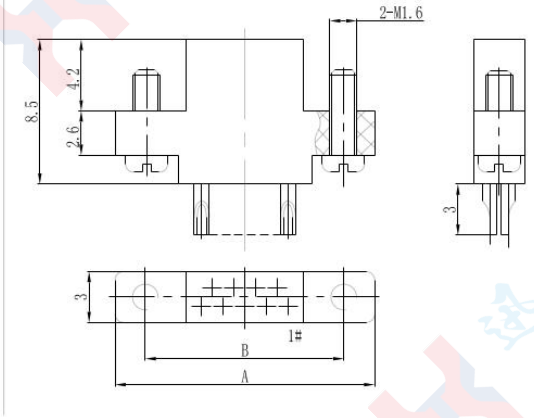

J30V2-×TJS-L1

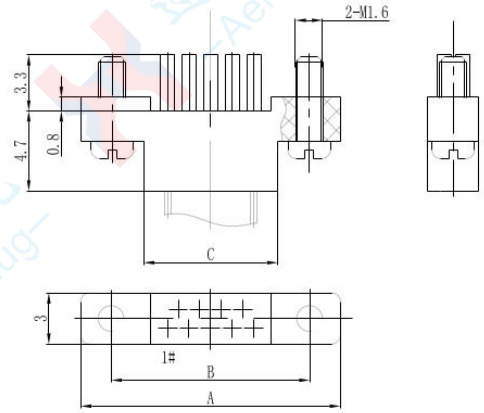

J30V2-×ZKS-L1

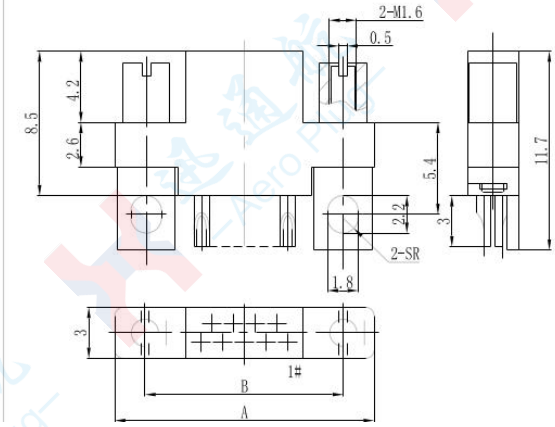

J30V2-×TJS-P2

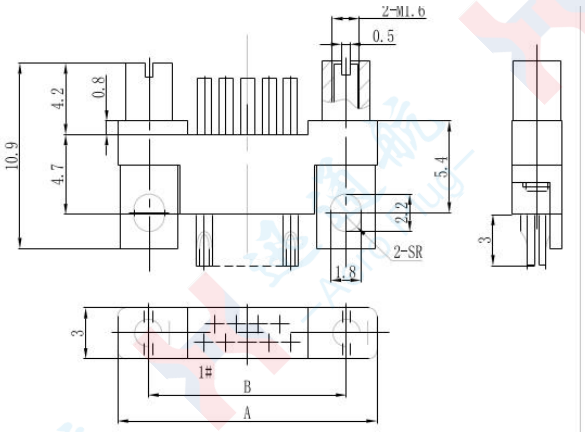

J30V2-×ZKS-P2

Number of Contacts	A	B	Number of Contacts	A	B
9-Contact	15.3	11.7	31-Contact	29.3	25.7
15-Contact	19.1	15.5	37-Contact	33.1	29.5
21-Contact	22.9	19.3	51-Contact	42	38.4
25-Contact	25.5	21.9			

■J30V2 Straight Plug-in PCB Series

J30V2 - X TJ/ZK - N - X
① ② ③ ④ ⑤

①General Designation: J30V2

②Number of Contacts: 9、15、21、25、31、37、51

③Contact Type: TJ - Plug-mounted pins

ZK - Socket-mounted sockets

④Through-Hole PCB Series: N

⑤Locking Component Type (Base type is fixed once the locking component is selected):

P3-Equipped with support sleeve and vertical mounting screw accessories

P6-Equipped with extended support sleeve and vertical mounting screw accessories (extended version of P3)

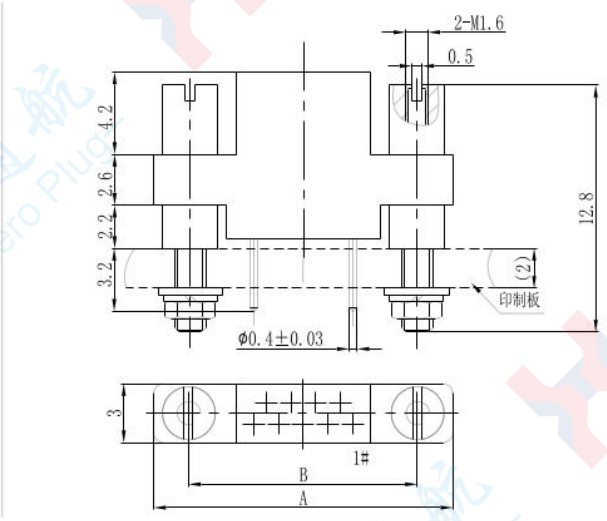

J30V2-×TJN-P3

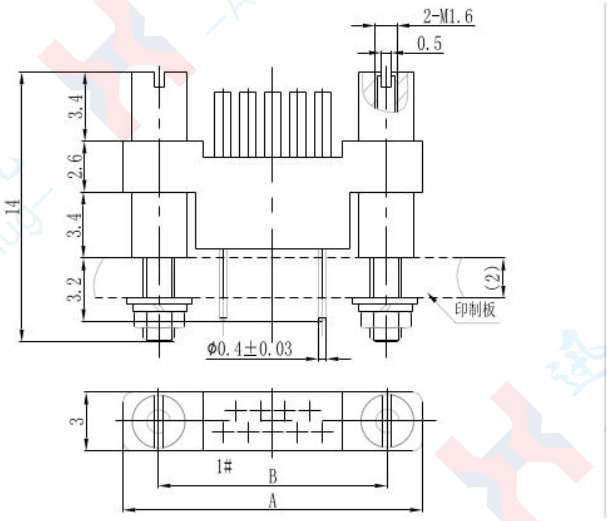

J30V2-×ZKN-P6

Number of Contacts	A	B	C	Number of Contacts	A	B	C
9-Contact	15.3	11.7	7.9	31-Contact	29.3	25.7	21.9
15-Contact	19.1	15.5	11.7	37-Contact	33.1	29.5	25.8
21-Contact	22.9	19.3	15.5	51-Contact	42	38.4	34.7
25-Contact	25.5	21.9	18.1				

Through-Hole PCB Mounting Hole Dimensions (J30V2-×TJN-P6)

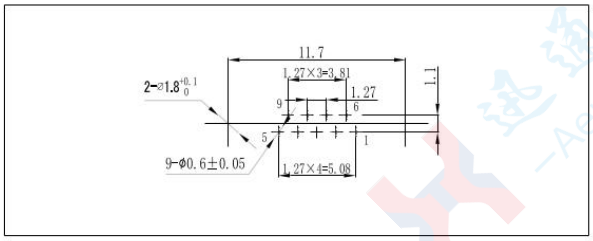

J30V2-9TJN-P3

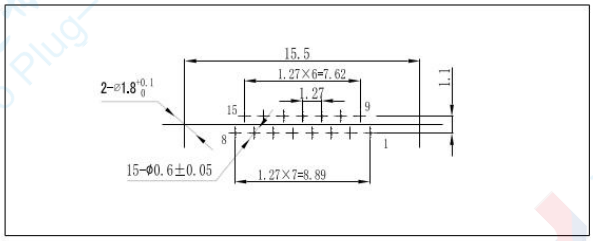

J30V2-15TJN-P3

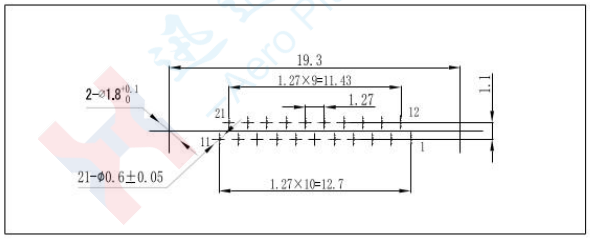

J30V2-21TJN-P3

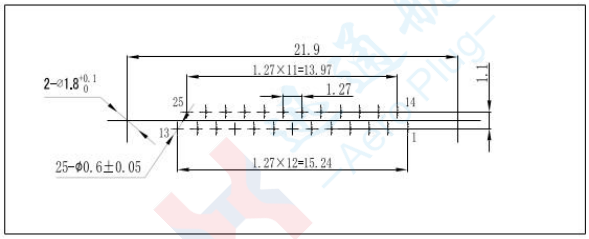

J30V2-25TJN-P3

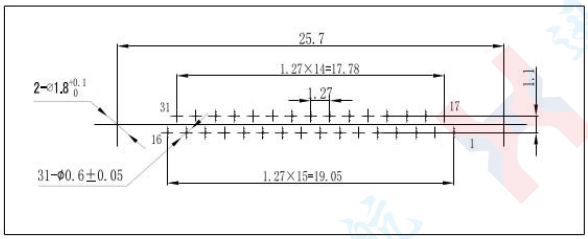

J30V2-31TJN-P3

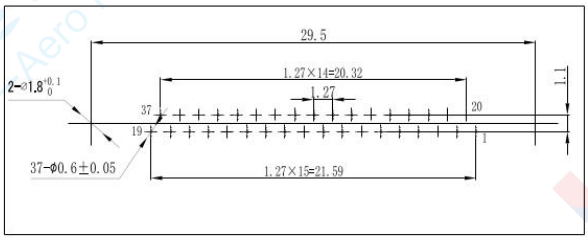

J30V2-37TJN-P3

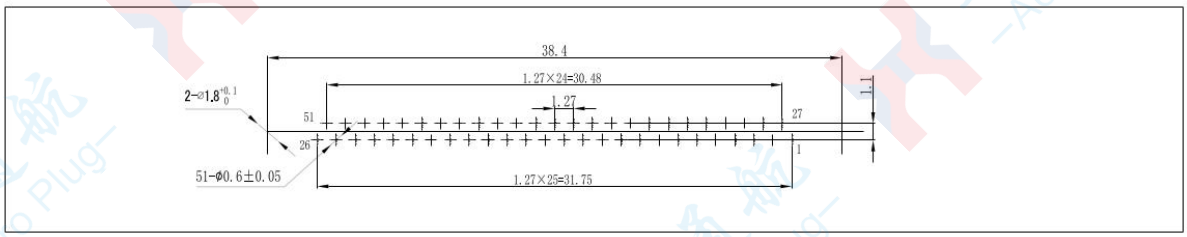

J30V2-51TJN-P3

Through-Hole PCB Mounting Hole Dimensions (J30V2-×ZKN-P6)

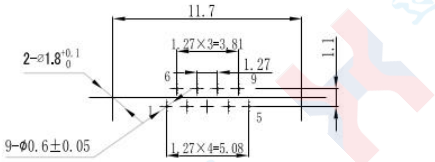

J30V2-9ZKN-P6

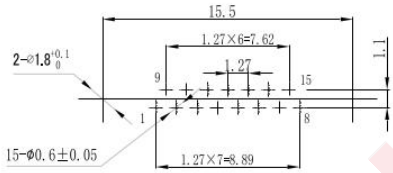

J30V2-15ZKN-P6

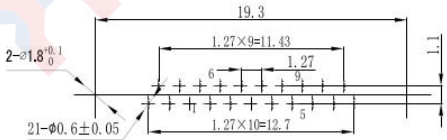

J30V2-21ZKN-P6

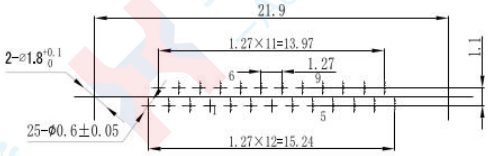

J30V2-25ZKN-P6

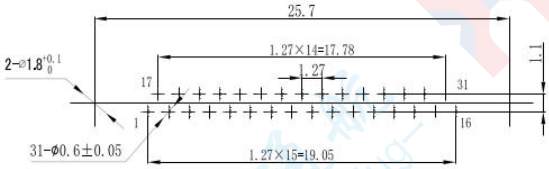

J30V2-31ZKN-P6

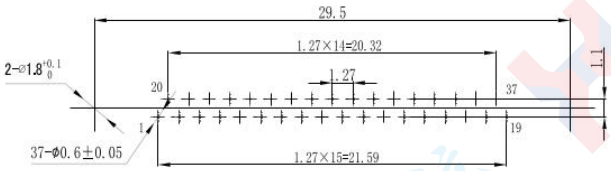

J30V2-37ZKN-P6

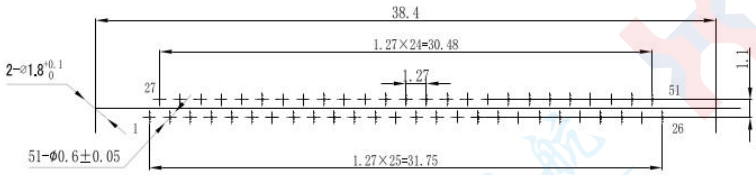

J30V2-51ZKN-P6

■J30V2 Right-Angle PCB Mount Series

J30V2 - X TJ/ZK - W - X

① ② ③ ④ ⑤

①General Designation：J30V2

②Number of Contacts： 9、15、21、25、31、37、51

③Contact Type： TJ - Plug-mounted pins

ZK - Socket-mounted sockets

④Right-Angle PCB Series：W

⑤Locking Component Type (Base type is fixed once the locking component is selected：

P2—Equipped with mounting bracket and coupling nut accessories

Product Outline and Mounting Dimensions

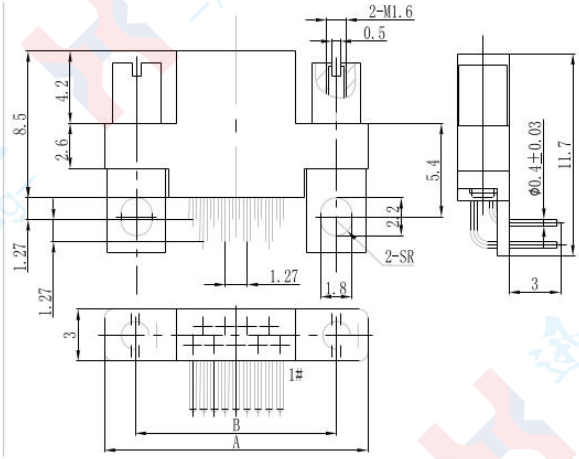

J30V2-×TJW-P2

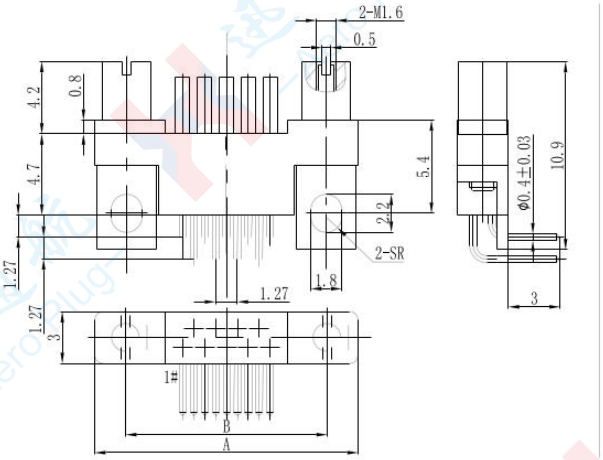

J30V2-×ZKW-P2

Number of Contacts	A	B	C	Number of Contacts	A	B	C
9-Contact	15.3	11.7	7.9	31-Contact	29.3	25.7	21.9
15-Contact	19.1	15.5	11.7	37-Contact	33.1	29.5	25.8
21-Contact	22.9	19.3	15.5	51-Contact	42	38.4	34.7
25-Contact	25.5	21.9	18.1				

Right-Angle PCB Mounting Hole Dimensions (J30V2-×TJW-P2)

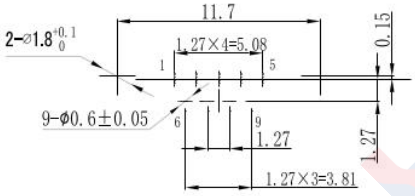

J30V2-9TJW-P2

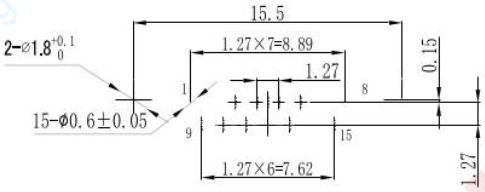

J30V2-15TJW-P2

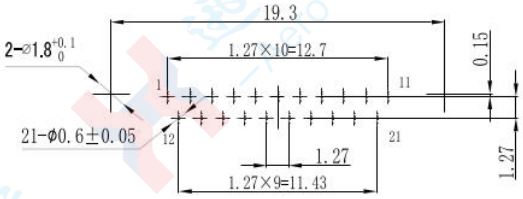

J30V2-21TJW-P2

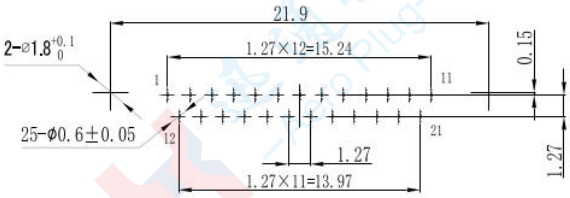

J30V2-25TJW-P2

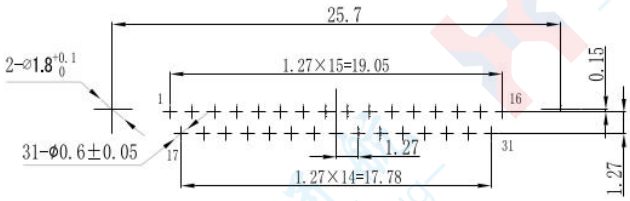

J30V2-31TJW-P2

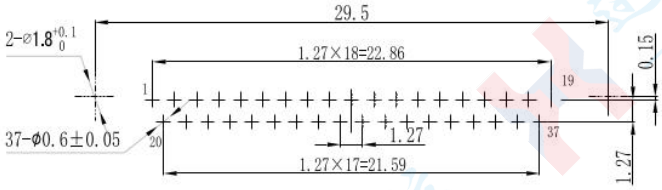

J30V2-37TJW-P2

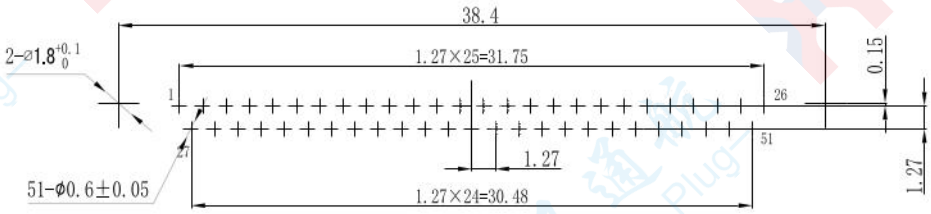

J30V2-51TJW-P2

Right-Angle PCB Mounting Hole Dimensions (J30V2-×ZKW-P2)

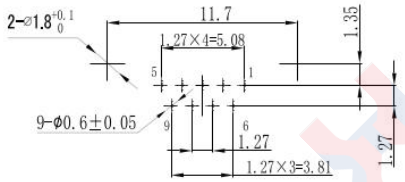

J30V2-9ZKW-P2

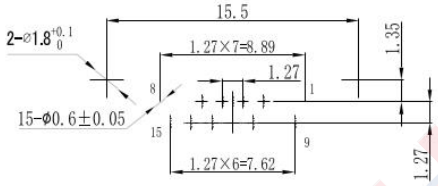

J30V2-15ZKW-P2

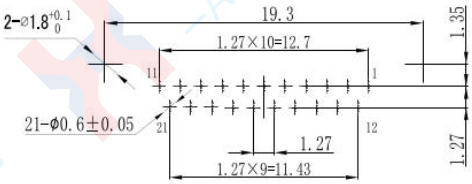

J30V2-21ZKW-P2

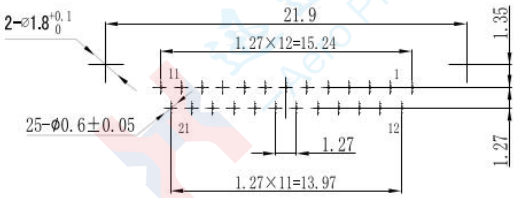

J30V2-25ZKW-P2

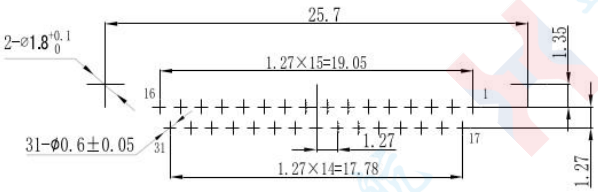

J30V2-31ZKW-P2

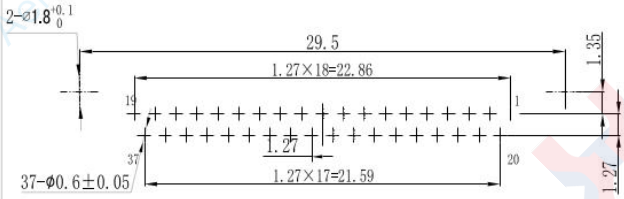

J30V2-37ZKW-P2

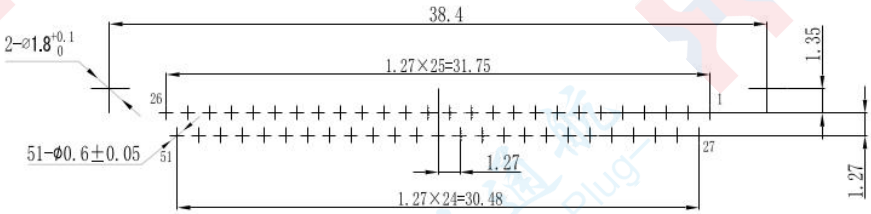

J30V2-51ZKW-P2

■J30V2 Right-Angle PCB Solder Mount Series

J30V2 - X TJ/ZK - W - X

① ② ③ ④ ⑤

①General Designation: J30V2

②Number of Contacts: 9、15、21、25、31、37、51

③Contact Type: TJ - Plug-mounted pins

ZK - Socket-mounted sockets

④Right-Angle PCB Series: W

⑤Locking Component Type (Base type is fixed once the locking component is selected):

P4—Equipped with mounting bracket and horizontal solder-mount accessories

Product Outline and Mounting Dimensions

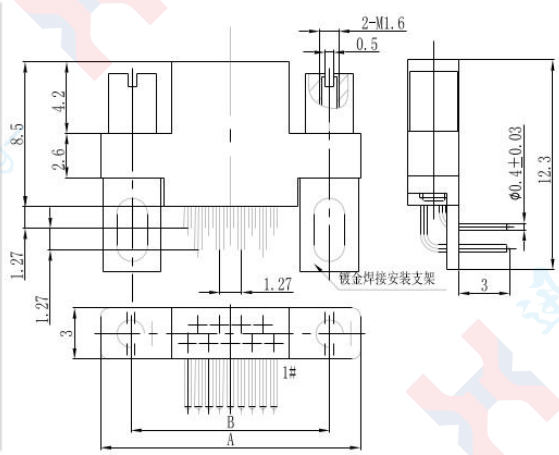

J30V2-×TJW-P4

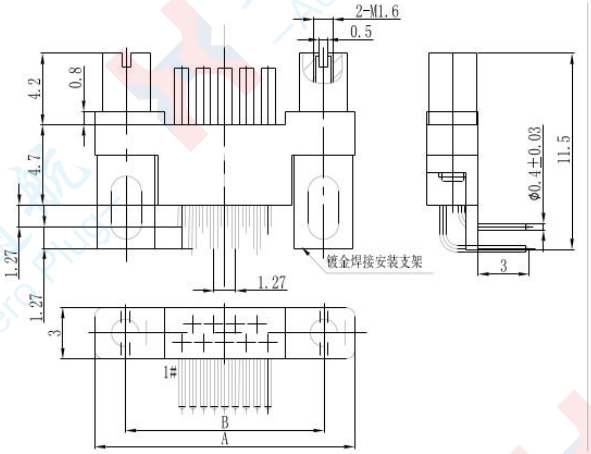

J30V2-×ZKW-P4

Number of Contacts	A	B	C	Number of Contacts	A	B	C
9-Contact	15.3	11.7	7.9	31-Contact	29.3	25.7	21.9
15-Contact	19.1	15.5	11.7	37-Contact	33.1	29.5	25.8
21-Contact	22.9	19.3	15.5	51-Contact	42	38.4	34.7
25-Contact	25.5	21.9	18.1				

Right-Angle PCB Solder-Mount Mounting Hole Dimensions (J30V2-×TJW-P4)

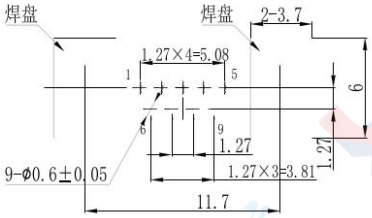

J30V2-9TJW-P4

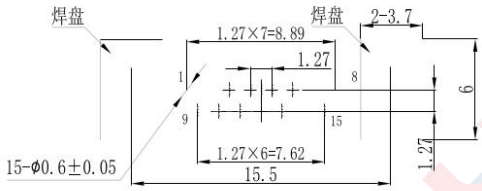

J30V2-15TJW-P4

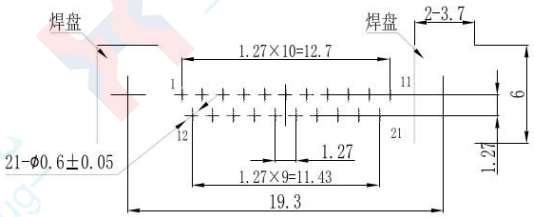

J30V2-21TJW-P4

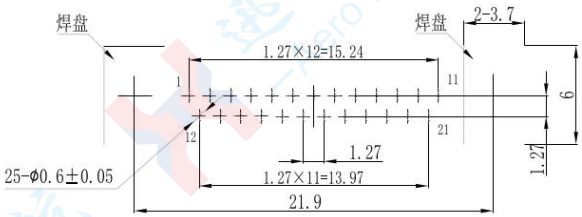

J30V2-25TJW-P4

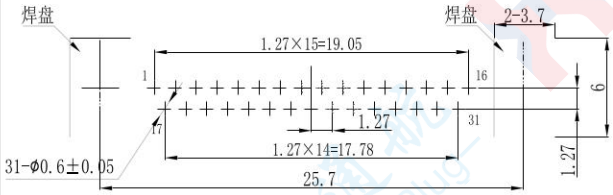

J30V2-31TJW-P4

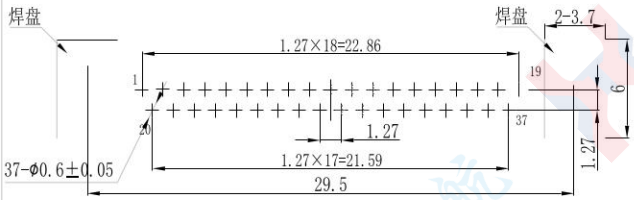

J30V2-37TJW-P4

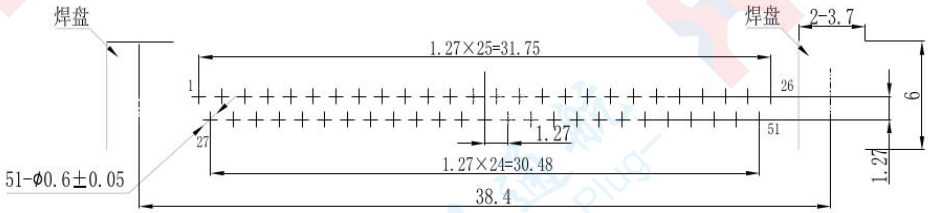

J30V2-51TJW-P4

J30V2-×ZKW-P4Right-Angle PCB Solder-Mount Mounting Hole Dimensions (J30V2-×ZKW-P4)

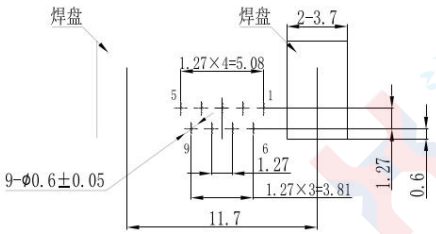

J30V2-9ZKW-P4

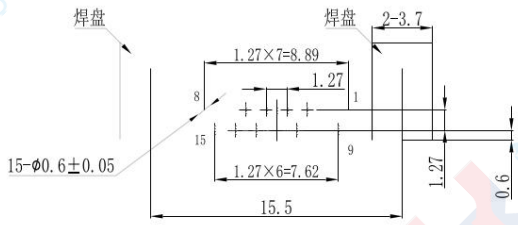

J30V2-15ZKW-P4

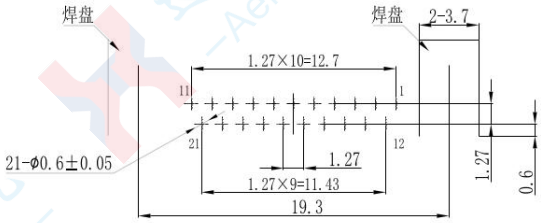

J30V2-21ZKW-P4

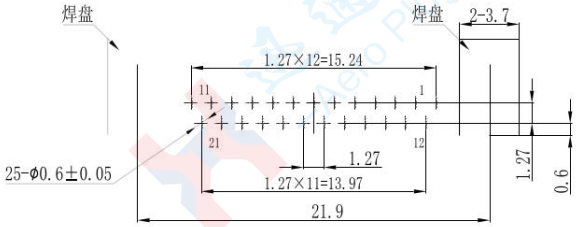

J30V2-25ZKW-P4

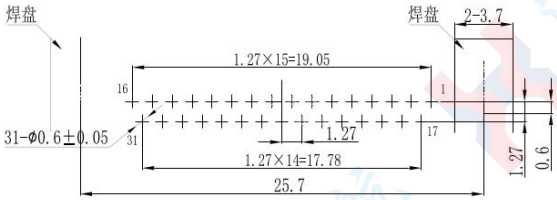

J30V2-31ZKW-P4

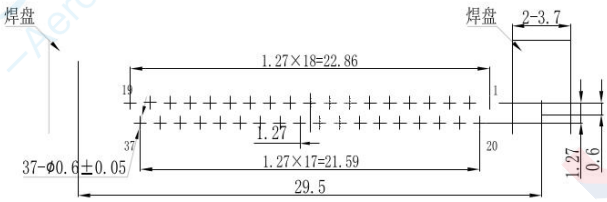

J30V2-37ZKW-P4

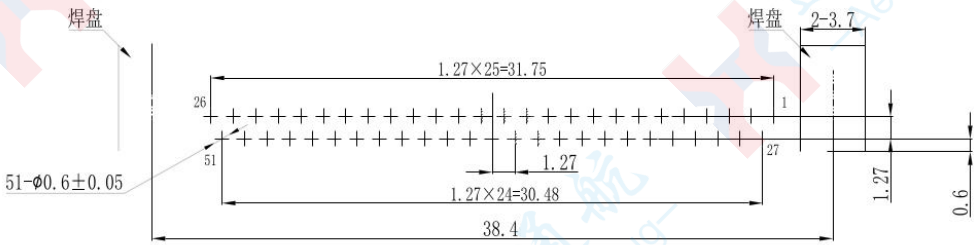

J30V2-51ZKW-P4

J56 Series Micro-Rectangular Electrical Connectors

Product Features

■Number of Contacts: 8 specifications available (8, 10, 12, 20, 32, 40, 50, 64 contacts). For each contact count, derivative products are offered with different pin lengths.

■The product is a through-hole adapter socket, meaning sockets with the same number of contacts are mutually mateable.

■The grid spacing remains 2.54×2.54 mm after multiple sockets are arranged horizontally or vertically.

■Executive Standard: Technical Specifications for J56 Series Dual-in-line Through-hole Adapter Sockets

Technical Characteristics

■Operating Temperature: -55℃～+125℃
■Vibration: 50Hz～2000Hz 150m/S2
■Shock: 1000m/S2 10ms±2ms
■Rated Current: 3A
■Contact Resistance: ≤ 10mΩ
■Impact: 400m/s², 4000 cycles
■Insulation Resistance: ≥ 5000MΩ
■Dielectric Withstand Voltage: 1000V
■Mechanical Life: 500 mating cycles

Type Spectrum Arrangement

J56 Series Dual-in-line Through-hole Adapter Sockets

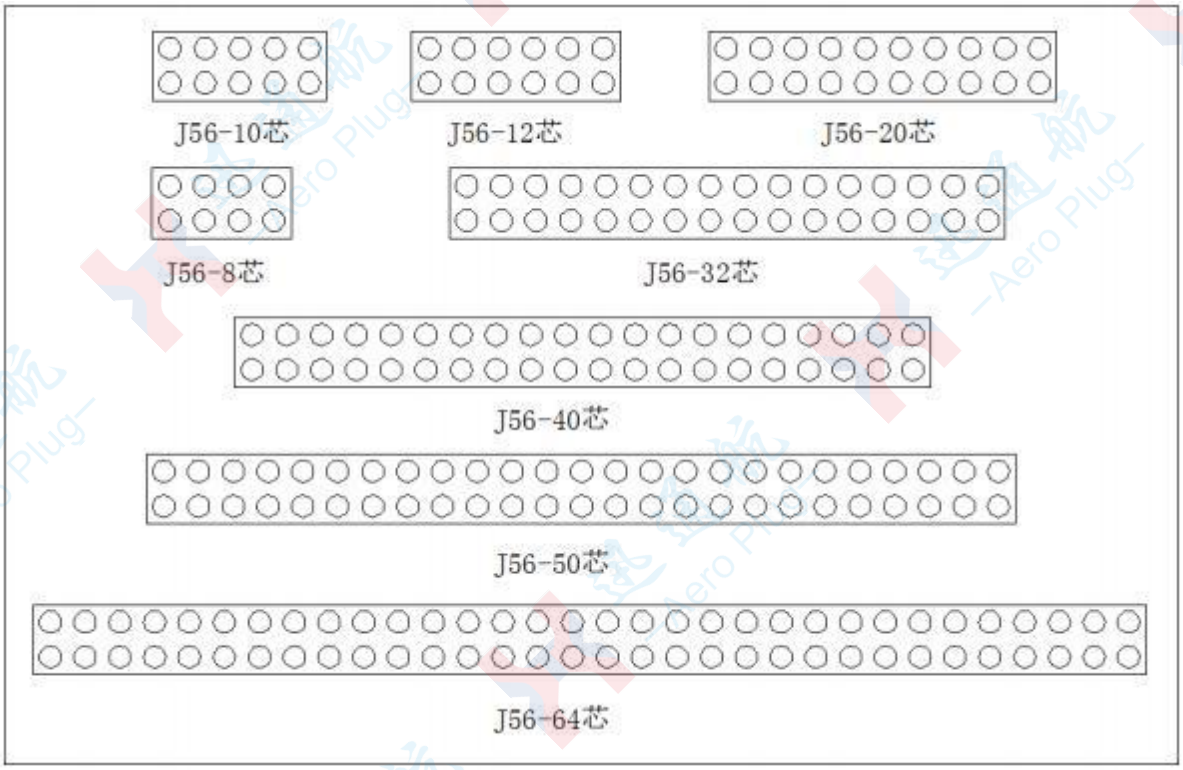

J56B Series Single-in-line Through-hole Adapter Connectors

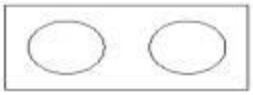

J56B–2芯

J56B–3芯

Product Family Tree

order mark

J56 - X X ZJ/ZK X
① ② ③ ④ ⑤

① General Designation: J56

② Socket Type: No designation — Dual-in-line Through-hole Socket;

B—Single-in-line Through-hole Socket; E— Base material changed from PBT to PPS

③Number of Contacts: 8, 10, 12, 20, 32, 40, 50, 64, etc

④ Connector & Contact Type: ZJ — Pin Socket ZK — Socket (Hole Socket) TJ—Pin Plug

⑤Tail End Configuration: No number — Standard Type 1 ~ 13,

16 ~ 20 — Contacts with different lengths

Marking Example : J56 – 20 ZK 3

This marking indicates a J56 Dual-in-line Socket with 20 contacts, socket (hole) contacts, and contact length series 3.

J56 Series Dual-in-line Through-hole Adapter Sockets

■Pin Socket
■J56-8、10、20、32、40、64ZJ/ZJn

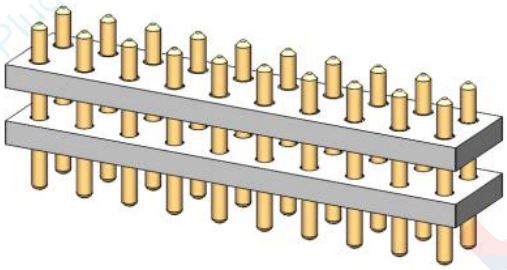

J56-20ZJ

■Socket (Hole Socket)
■J56-8、10、20、32、40、64ZK/ZKn

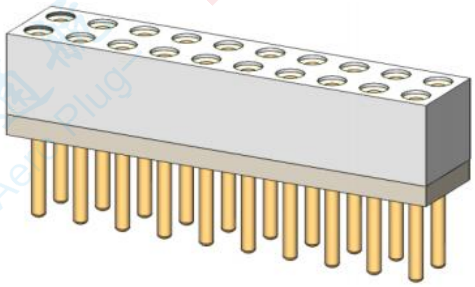

J56-20ZK

Outline Dimensional Drawing for J56B - 20ZJ□

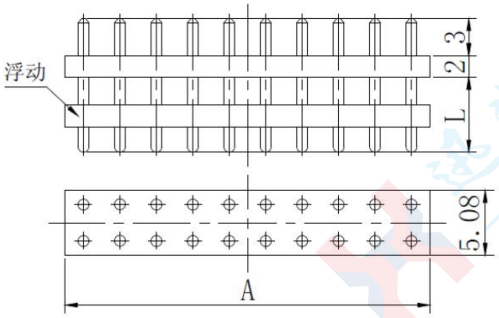

Outline Dimensional Drawing for J56B-20ZK□

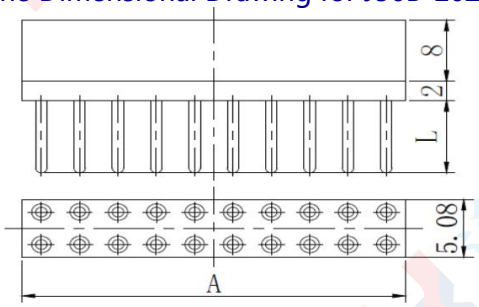

Pin Socket

order mark	A	L	order mark	A	L
J56-8ZJ4	10.16	5	J56-32ZJ	40.6	7
J56-10ZJ	12.7	7	J56-32ZJ1	40.6	9.1
J56-10ZJ1	12.7	9.1	J56-32ZJ2	40.6	10
J56-10ZJ2	12.7	10	J56-32ZJ4	40.6	5
J56-10ZJ4	12.7	5	J56-40ZJ	50.8	7
J56-12ZJ	15.24	7	J56-40ZJ1	50.8	9.1
J56-12ZJ1	15.24	9.1	J56-40ZJ2	50.8	10
J56-12ZJ2	15.24	10	J56-40ZJ4	50.8	5
J56-12ZJ4	15.24	5	J56-50ZJ	63.5	7
J56-20ZJ	25.4	7	J56-50ZJ1	63.5	9.1
J56-20ZJ1	25.4	9.1	J56-50ZJ2	63.5	10
J56-20ZJ2	25.4	10	J56-50ZJ4	63.5	5
J56-20ZJ4	25.4	5	J56-64ZJ2	81.3	10
J56-64ZJ	81.3	7	J56-64ZJ4	81.3	5
J56-64ZJ1	81.3	9.1	J56-44ZJ	55.88	7
J56-64ZJ7	81.3	20	J56-36ZJ	46.72	7
J56-28ZJ1	35.56	9.1	J56-20ZJ9	25.4	3.5
J56-24ZJ4	30.48	5	J56-32ZJ10	40.64	8
J56-32ZJ9	40.64	3.5	J56-32ZJ11	40.64	14
J56-20ZJ11	25.4	14			

Socket (Hole Socket)

order mark	A	L	order mark	A	L	order mark	A	L
J56-8ZK2	10.16	5.5	J56-12ZK	15.24	9.2	J56-20ZK	25.4	9.2
J56-10ZK	12.7	9.2	J56-12ZK1	15.24	1	J56-20ZK1	25.4	1
J56-10ZK1	12.7	1	J56-12ZK2	15.24	5.5	J56-20ZK2	25.4	5.5
J56-10ZK2	12.7	5.5	J56-12ZK3	15.24	7.5	J56-20ZK3	25.4	7.5
J56-10ZK3	12.7	7.5	J56-12ZK4	15.24	8.5	J56-20ZK4	25.4	8.5
J56-10ZK4	12.7	8.5	J56-12ZK5	15.24	14	J56-20ZK5	25.4	14
J56-10ZK5	12.7	14	J56-12ZK6	15.24	10.5	J56-20ZK6	25.4	10.5
J56-10ZK6	12.7	10.5	J56-12ZK7	15.24	15	J56-20ZK7	25.4	15
J56-10ZK7	12.7	15	J56-12ZK8	15.24	20	J56-20ZK8	25.4	20
J56-10ZK8	12.7	20	J56-12ZK9	15.24	12	J56-20ZK9	25.4	12
J56-10ZK9	12.7	12	J56-12ZK10	15.24	3.5	J56-20ZK10	25.4	3.5
J56-10ZK10	12.7	3.5	J56-12ZK11	15.24	18	J56-20ZK11	25.4	18
J56-10ZK11	12.7	18	J56-12ZK12	15.24	11.5	J56-20ZK12	25.4	11.5
J56-10ZK12	12.7	11.5	J56-12ZK13	15.24	16.5	J56-20ZK13	25.4	16.5
J56-10ZK13	12.7	16.5	J56-12ZK16	15.24	9.5	J56-20ZK16	25.4	9.5
J56-10ZK16	12.7	9.5	J56-12ZK17	15.24	31	J56-20ZK17	25.4	31
J56-10ZK17	12.7	31	J56-12ZK18	15.24	2.6	J56-20ZK18	25.4	2.6
J56-10ZK18	12.7	2.6	J56-12ZK19	15.24	3	J56-20ZK19	25.4	3
J56-10ZK19	12.7	3	J56-12ZK20	15.24	35	J56-20ZK20	25.4	35
J56-10ZK20	12.7	35						

order mark	A	L	order mark	A	L	order mark	A	L
J56-32ZK	40.64	9.2	J56-40ZK	50.8	9.2	J56-50ZK	63.5	9.2
J56-32ZK1	40.64	1	J56-40ZK1	50.8	1	J56-50ZK1	63.5	1
J56-32ZK2	40.64	5.5	J56-40ZK2	50.8	5.5	J56-50ZK2	63.5	5.5
J56-32ZK3	40.64	7.5	J56-40ZK3	50.8	7.5	J56-50ZK3	63.5	7.5
J56-32ZK4	40.64	8.5	J56-40ZK4	50.8	8.5	J56-50ZK4	63.5	8.5
J56-32ZK5	40.64	14	J56-40ZK5	50.8	14	J56-50ZK5	63.5	14
J56-32ZK6	40.64	10.5	J56-40ZK6	50.8	10.5	J56-50ZK6	63.5	10.5
J56-32ZK7	40.64	15	J56-40ZK7	50.8	15	J56-50ZK7	63.5	15
J56-32ZK8	40.64	20	J56-40ZK8	50.8	20	J56-50ZK8	63.5	20
J56-32ZK9	40.64	12	J56-40ZK9	50.8	12	J56-50ZK9	63.5	12
J56-32ZK10	40.64	3.5	J56-40ZK10	50.8	3.5	J56-50ZK10	63.5	3.5
J56-32ZK11	40.64	18	J56-40ZK11	50.8	18	J56-50ZK11	63.5	18
J56-32ZK12	40.64	11.5	J56-40ZK12	50.8	11.5	J56-50ZK12	63.5	11.5
J56-32ZK13	40.64	16.5	J56-40ZK13	50.8	16.5	J56-50ZK13	63.5	16.5
J56-32ZK16	40.64	9.5	J56-40ZK16	50.8	9.5	J56-50ZK16	63.5	9.5
J56-32ZK17	40.64	31	J56-40ZK17	50.8	31	J56-50ZK17	63.5	31
J56-32ZK18	40.64	2.6	J56-40ZK18	50.8	2.6	J56-50ZK18	63.5	2.6
J56-32ZK19	40.64	3	J56-40ZK19	50.8	3	J56-50ZK19	63.5	3
J56-32ZK20	40.64	35	J56-40ZK20	50.8	35	J56-50ZK20	63.5	35

order mark	A	L	order mark	A	L
J56-64ZK	81.3	9.2	J56-28Z K1	35.56	1
J56-64ZK1	81.3	1	J56-44Z K10	55.88	3.5
J56-64ZK2	81.3	5.5	J56-20Z K14	25.4	2
J56-64ZK3	81.3	7.5	J56-32Z K14	40.64	2
J56-64ZK4	81.3	8.5	J56-10Z K23	12.7	39
J56-64ZK5	81.3	14	J56-20Z K23	25.4	39
J56-64ZK6	81.3	10.5	J56-26Z K10	33.02	3.5
J56-64ZK7	81.3	15	J56-14Z K14	17.78	2
J56-64ZK8	81.3	20	J56-16ZK	20.32	9.2
J56-64ZK9	81.3	12	J56-60ZK9	76.2	12
J56-64ZK10	81.3	3.5	J56-60ZK	76.2	9.2
J56-64ZK11	81.3	18	J56-64ZK17	81.3	31
J56-64ZK12	81.3	11.5	J56-64ZK18	81.3	2.6
J56-64ZK13	81.3	16.5	J56-64ZK19	81.3	3
J56-64ZK16	81.3	9.5	J56-64ZK20	81.3	35

Outline Drawing of Mated Products

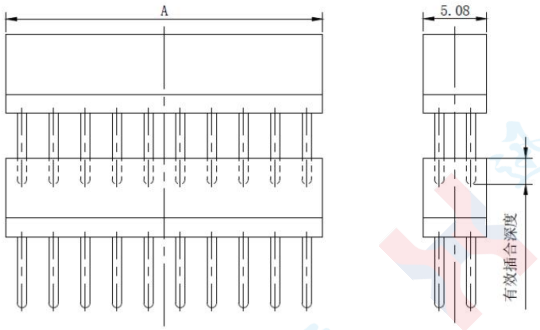

J56-20ZK□ and J56-20ZK□

Mating Part Number	A	Effective Mating Depth
J56-10ZK□-J56-10ZK□	12.7	(2～4) mm
J56-10ZK□-J56-10ZJ□	12.7	(2～4) mm

Mating Part Number	A	Effective Mating Depth
J56-20ZK□-J56-20ZK□	25.4	(2～4) mm
J56-20ZK□-J56-20ZJ□	25.4	(2～4) mm

Mating Part Number	A	Effective Mating Depth
J56-40ZK□-J56-40ZK□	50.8	(2～4) mm
J56-40ZK□-J56-40ZJ□	50.8	(2～4) mm

Mating Part Number	A	Effective Mating Depth
J56-64ZK□-J56-64ZK□	81.3	(2～4) mm
J56-64ZK□-J56-64ZJ□	81.3	(2～4) mm

Outline Drawing of Mated Products

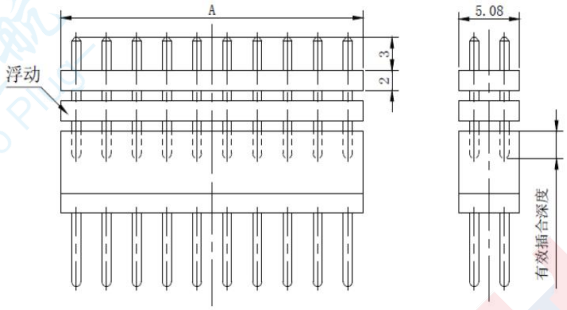

J56-20ZK□ and J56-20ZJ□

Mating Part Number	A	Effective Mating Depth
J56-12ZK□-J56-12ZK□	15.24	(2～4) mm
J56-12ZK□-J56-12ZJ□	15.24	(2～4) mm

Mating Part Number	A	Effective Mating Depth
J56-32ZK□-J56-32ZK□	40.6	(2～4) mm
J56-32ZK□-J56-32ZJ□	40.6	(2～4) mm

Mating Part Number	A	Effective Mating Depth
J56-50ZK□-J56-50ZK□	63.5	(2～4) mm
J56-50ZK□-J56-50ZJ□	63.5	(2～4) mm

Mating Part Number	A	Effective Mating Depth
J56-8ZK2-J56-12ZJ4	10.16	(2～4) mm

J56 Series Single-in-line Through-hole Adapter Connectors

■Socket

■J56B-2/3ZK J56B-2/3ZK3 J56B-2ZK2 J56B-2ZK1

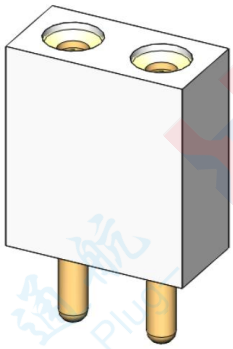

J56B-2ZK

■Plug

■J56B-2/3TJ J56B-2TJ1

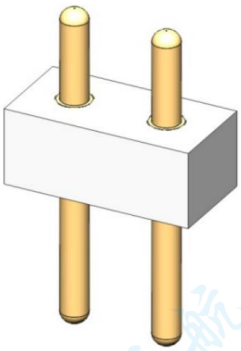

J56B-2TJ

Outline Dimensional Drawing for J56B-2ZK□

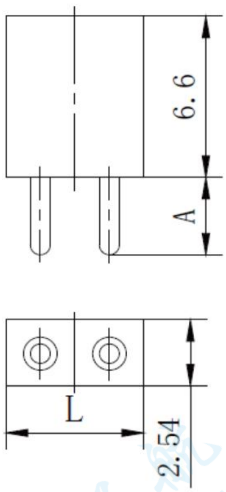

Outline Dimensional Drawing for J56B - 2ZJ□

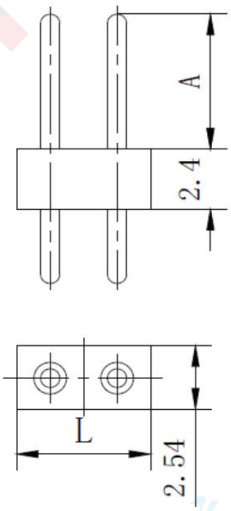

order mark	A	L	order mark	A	L
J56B-2ZK	2.7	5.08	J56B-2TJ	5	5.08
J56B-3ZK	2.7	7.62	J56B-3TJ	5	7.62
J56B-2ZK1	5.5	5.08	J56B-2TJ1	7.2	5.08
J56B-2ZK2	12	5.08	J56B-2ZK3	8	5.08
J56B-3ZK3	8	7.62			

PCB Drilling Dimension Drawing

J56 Series Dual-in-line Through-hole Adapter Sockets

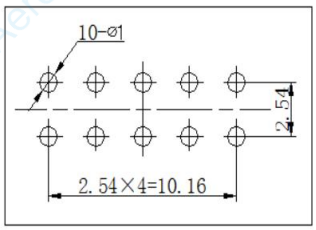

J56-10

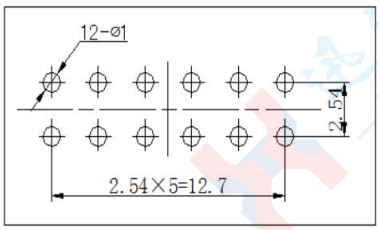

J56-12

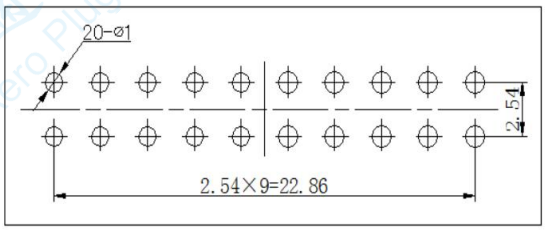

J56-20

PCB Drilling Dimension Drawing

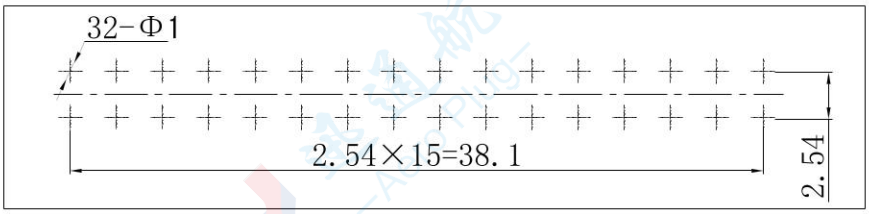

J56-32

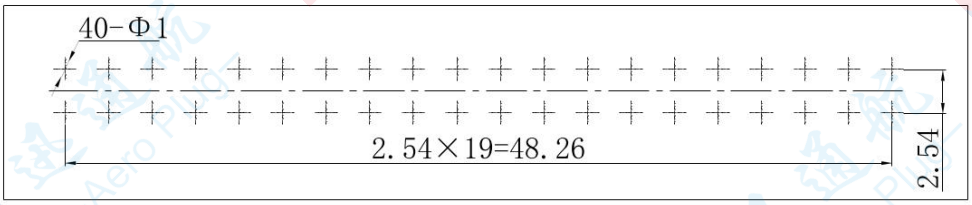

J56-40

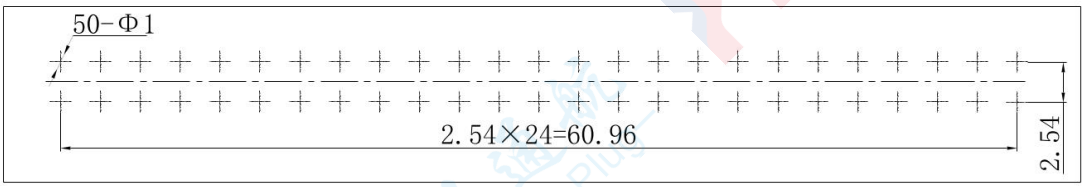

J56-50

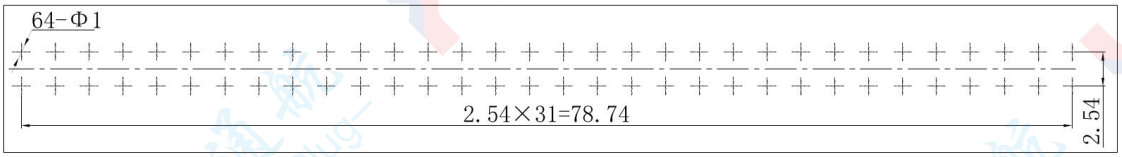

J56-64

J56 Series Single-in-line Through-hole Adapter Sockets

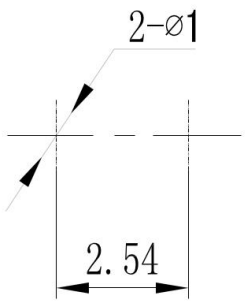

J56B-2

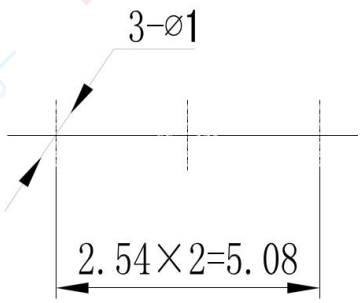

J56B-3

J103 Series Buckle-Locking Rectangular Electrical Connectors

Product Features

■ Adopts stranded elastic pins (twisted-wire pins) with miniature overall dimensions
■ Base material made of PPS, featuring excellent environmental resistance
■ Conductor core cross-sectional area: 0.1mm² ~ 0.15mm²
■ The locking component of this series is of buckle-locking type, and anti-misinsertion function can be achieved by installing locking accessories in different hole positions
■ Executive Standard: Detailed Specification for J103 Series Buckle-Locking Rectangular Electrical Connectors

Technical Specifications

■ Operating Temperature: -55℃ ~ +125℃
■ Vibration: 10Hz ~ 2000Hz 147m/s2
■ Shock: 735m/s2 11ms
■ Rated Current: 3A
■ Contact Resistance: ≤ 10mΩ
■ Insulation Resistance: ≥ 5000MΩ
■ Dielectric Withstand Voltage: 600V
■ Mechanical Life: 500 cycles
■ Engagement and Separation Force: ≤2.8N×n (n = number of contacts)

Type Spectrum Arrangement

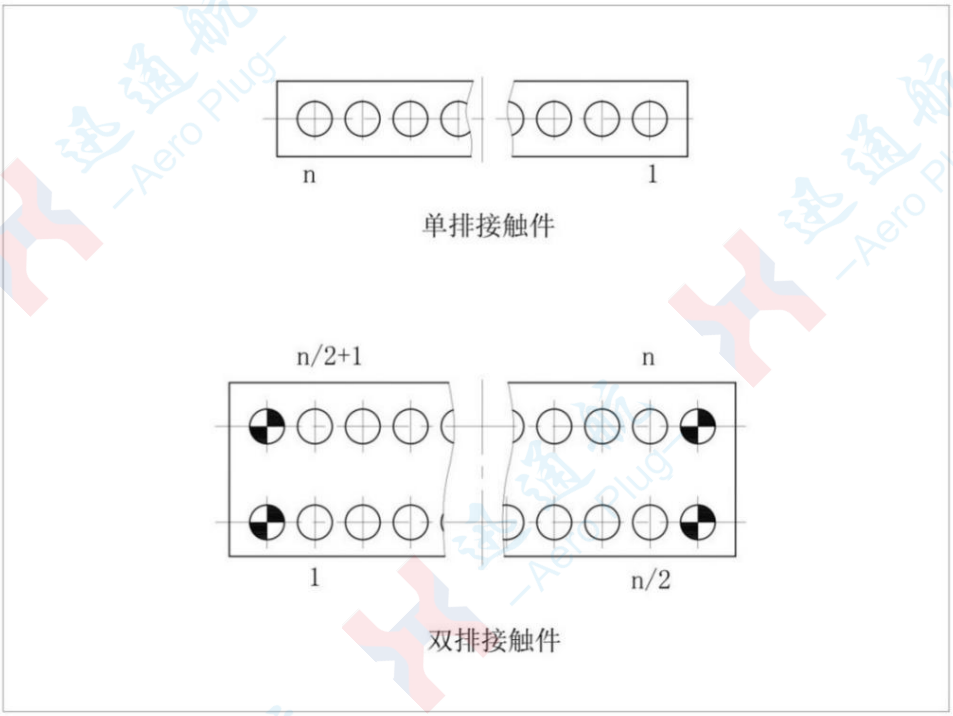

注：从插头对接端看

order mark
Single-Row Side-Locking Electrical Connector:

J103-× × × × SY× (Additional Notes)
① ② ③ ④ ⑤ ⑥

① Main Designation: J103

② Number of Contacts: 2～18

③ Connector Type: T-Plug, Z-Socket

④ Connector Type: J-Pin, K-Jack (TJ and ZK are fixed combinations)

⑤ Contact Form: N-Through-hole PCB Mount, W-Right-angle PCB Mount,
H-Soldered Type, No Marking: Crimp Type

⑥ Mounting Position of Locking Accessory:

Note: Supplementary Instructions are not part of the ordering code. When selecting products, customers shall specify crimped wire requirements in parentheses, such as conductor core cross-sectional area, length, and color. Provide a wiring diagram if the wiring relationship is complex.

Marking Example: J103-6TJSY4 (Wire: AFR-250-0.12mm², Length: 500mm)

This marking indicates a crimp-type single-row side-locking electrical connector plug with 6 contacts, pin-type contacts, and the locking accessory assembled at hole position #4. The required specifications are as follows: wire type AFR-250, conductor core cross-sectional area 0.12mm², and lead length not less than 500mm.

Three-Dimensional View of Single-Row Side-Locking ElectricalConnector

Crimp-Crimp Type Crimp-Through-hole PCB Mount Type Crimp-Right-angle PCB Mount Type

Overall Dimensions of the Product

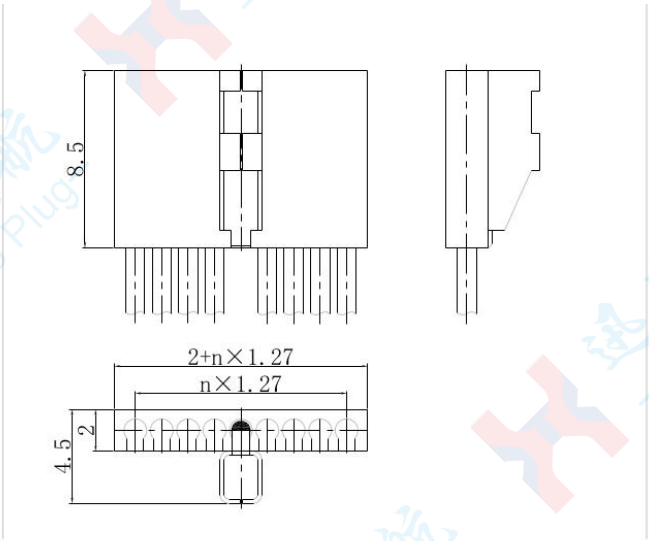

J103-| TJSY|

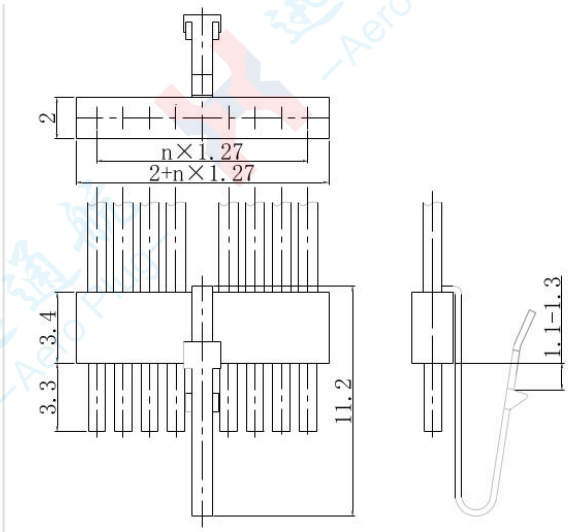

J103-| ZKSY|

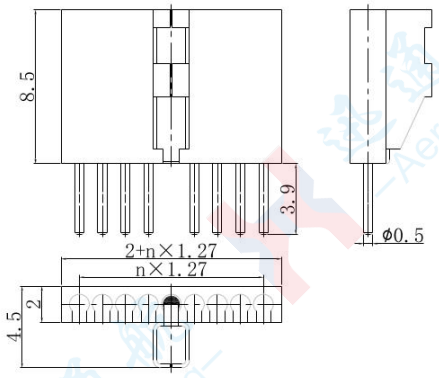

J103-TJNSY

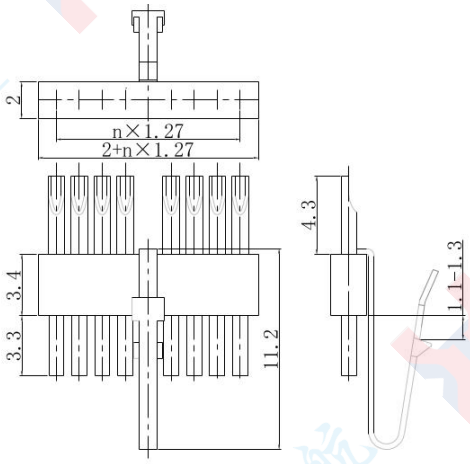

J103-ZKHSY

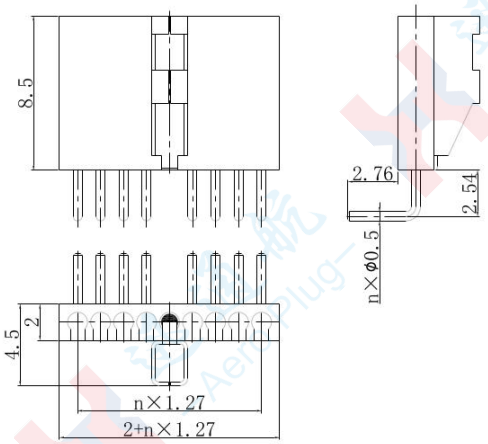

J103-TJWSY

Single-Row Side-Locking Electrical Connector with Mounting Holes:

J103K-× × × × SY× (Additional Notes)

① ② ③ ④ ⑤ ⑥

① Main Designation: J103K

② Number of Contacts: 2～18

③ Connector Type: T-Plug, Z-Socket

④ Contact Category: J-Pin, K-Socket (TJ and ZK are fixed combinations)

⑤ Contact Form: N-Through-hole PCB Mount, W-Right-angle PCB Mount, H-Soldered Type, No Marking-Crimp Type

⑥ Mounting Position of Locking Accessory:

Note: Supplementary Instructions are not part of the ordering code. When selecting products, customers shall specify crimped wire requirements in parentheses, such as conductor core cross-sectional area, length, and color. Provide a wiring diagram if the wiring relationship is complex.

Marking Example: J103K-6TJSY4 (Wire: AFR-250-0.12mm², Length: 500mm)

This marking indicates a crimp-type single-row side-locking electrical connector plug with mounting holes, featuring 6 contacts (pin type), and the locking accessory assembled at hole position #4. The required specifications are as follows: wire type AFR-250, conductor core cross-sectional area 0.12mm², and lead length not less than 500mm.

3D Isometric View of Single-Row Side-Locking Electrical Connectors with Mounting Holes

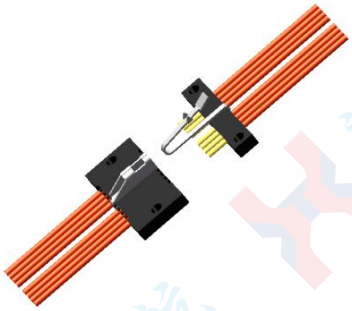

Crimp-Crimp Type

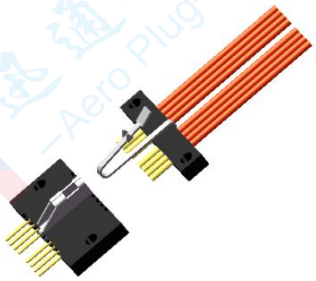

Crimp-Through-hole PCB Mount Type

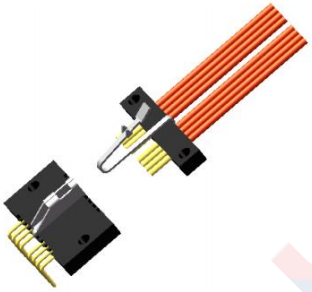

Crimp-Right-angle PCB Mount Type

Product Overall Dimensions

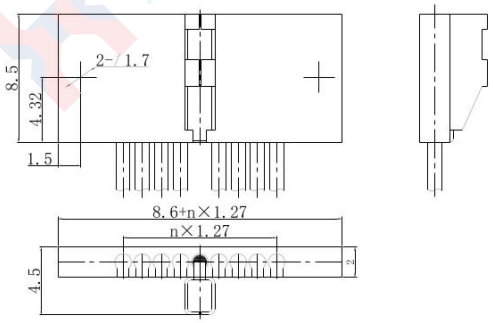

J103K-□TJSY□

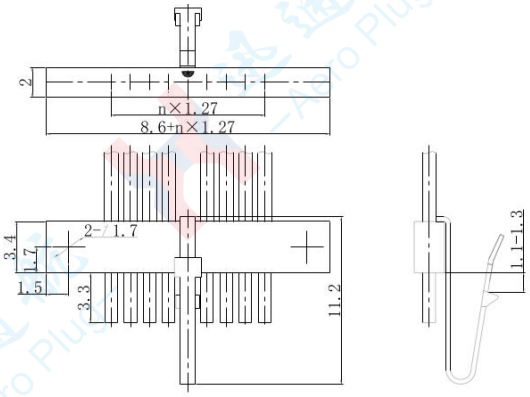

J103K-□ZKSY□

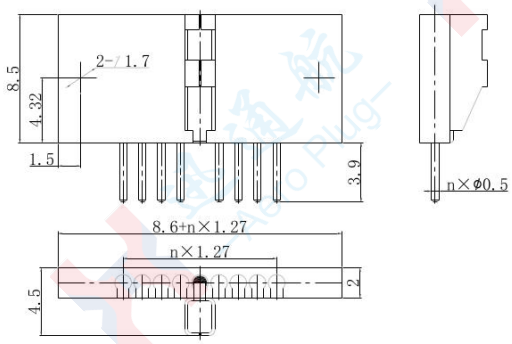

J103K-□TJNSY□

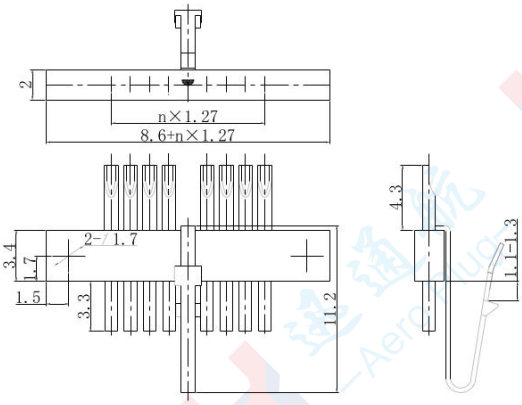

J103K-□ZKHSY□

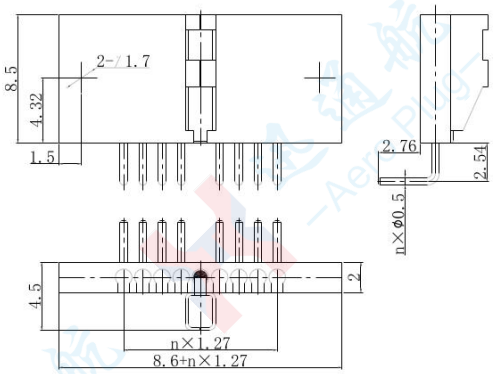

J103K-□TJWSY□

Single-Row Double-End Locking Electrical Connector:

J103B-× × × × S (Additional Notes)
① ②③④⑤ ⑥

① Main Designation: J103B

② Number of Contacts: 2～18

③ Connector Type: T-Plug, Z-Socket

④ Contact Category: J-Pin, K-Jack (TJ and ZK are fixed combinations)

⑤ Contact Form: N-Through-hole PCB Mount, W-Right-angle PCB Mount, H-Soldered Type, No Marking- Crimp Type

⑥ Mounting Position of Locking Accessory:

Note: Supplementary Instructions are not part of the ordering code. When selecting products, customers shall specify crimped wire requirements in parentheses, such as conductor core cross-sectional area, length, and color. Provide a wiring diagram if the wiring relationship is complex.

Marking Example: J103B-6TJS (Wire: AFR-250-0.12mm², Length: 500mm)

This marking indicates a crimp-type single-row double-end locking electrical connector plug with 6 contacts (pin type) and locking accessories assembled at both ends of the base. The required specifications are as follows: wire type AFR-250, conductor core cross-sectional area 0.12mm², and lead length not less than 500mm.

3D Isometric View of Single-Row Side-Locking Electrical Connectors with Mounting Holes

Crimp-Crimp Type

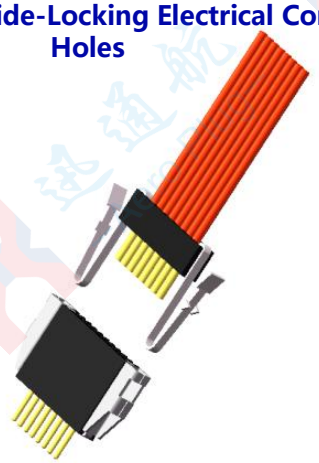

Crimp-Through-hole PCB Mount Type

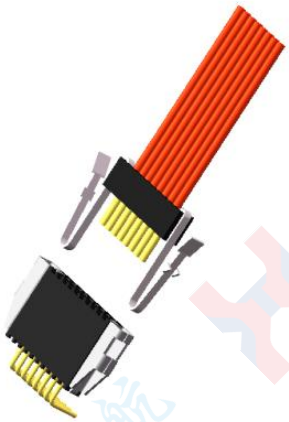

Crimp-Right-angle PCB Mount Type

Product Overall Dimensions

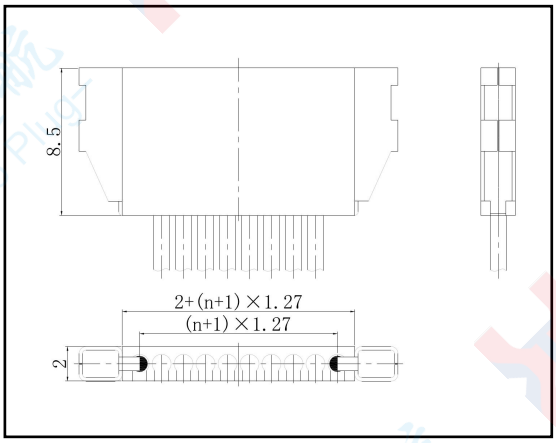

J103B-TJS

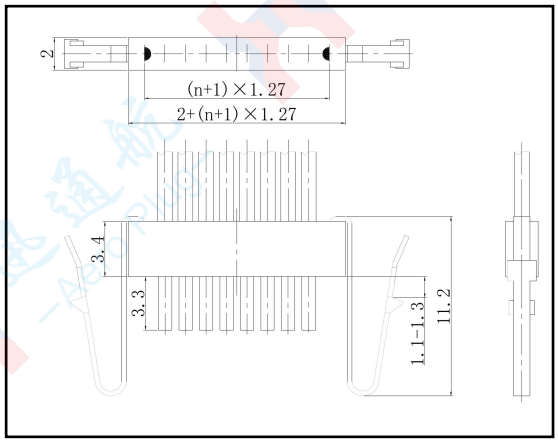

J103B-ZKS

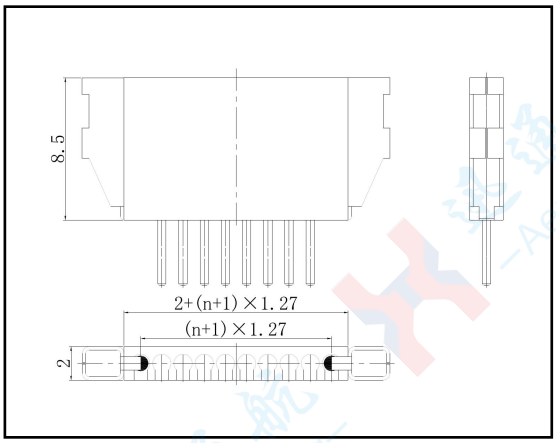

J103B-TJNS

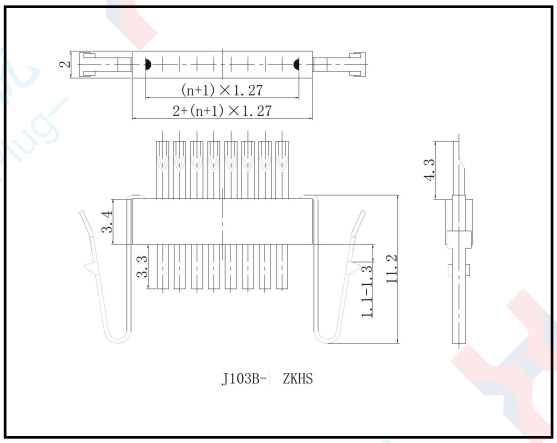

J103B-ZKNS

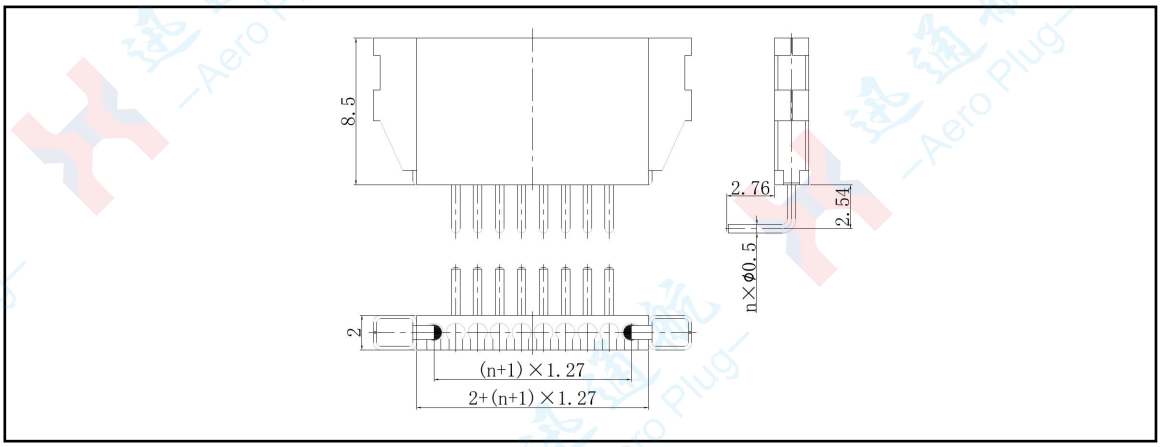

J103B-TJWS

Dual-Row Double-End Locking Electrical Connector:

J103D-× × × × × (Additional Notes)
① ② ③ ④ ⑤ ⑥

① Main Designation: J103D

② Number of Contacts: 2~18

③ Connector Type: T-Plug, Z-Socket

④ Contact Category: J-Pin, K-Jack (TJ and ZK are fixed combinations)

⑤ Contact Form: N-Through-hole PCB, W-Right-angle PCB, H-Soldered Type, No Marking-Crimp Type

⑥ Mounting Position of Locking Accessory: S1:Adjacent to the end holes of Row 1;

S2:Adjacent to the end holes of the other row; S3:Adjacent to Hole No.1 and the last hole;;

S4: Adjacent to Hole No.1, the last hole, and the first hole of the other row;

Note: Supplementary Instructions are not part of the ordering code. When selecting products, customers shall specify crimped wire requirements in parentheses, such as conductor core cross-sectional area, length, and color. Provide a wiring diagram if the wiring relationship is complex.

Marking Example: J103D-6TJS1 (Wire: AFR-250-0.12mm², Length: 500mm)

This marking indicates a crimp-type dual-row double-end locking electrical connector plug with 6 contacts (pin type), and the locking accessory assembled adjacent to the end holes of Row 1. The required specifications are as follows: wire type AFR-250, conductor core cross-sectional area 0.12mm², and lead length not less than 500mm.

Three-Dimensional View of Dual-Row Double-End Locking Electrical Connector

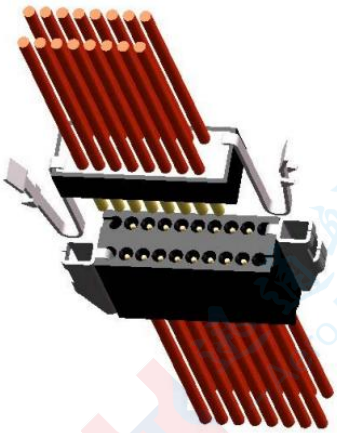

Crimp-Crimp Type

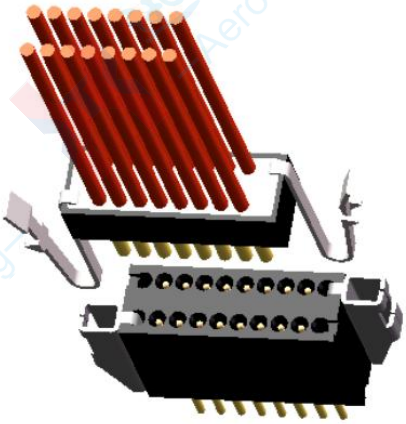

Crimp-Through-hole PCB Mount Type

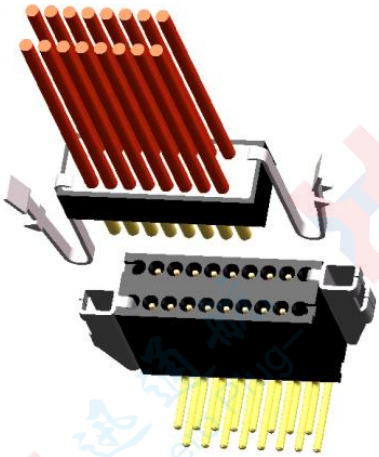

Crimp-Right-angle PCB Mount Type

Product Overall Dimensions

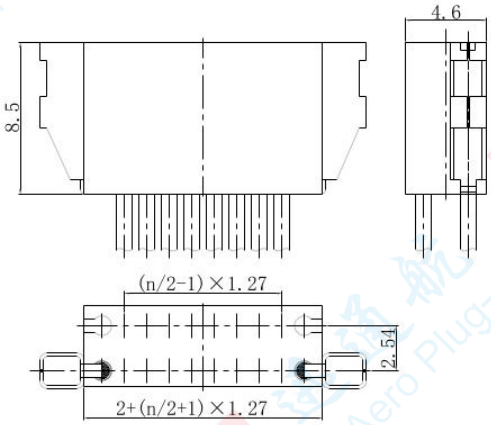

J103D-□TJS□

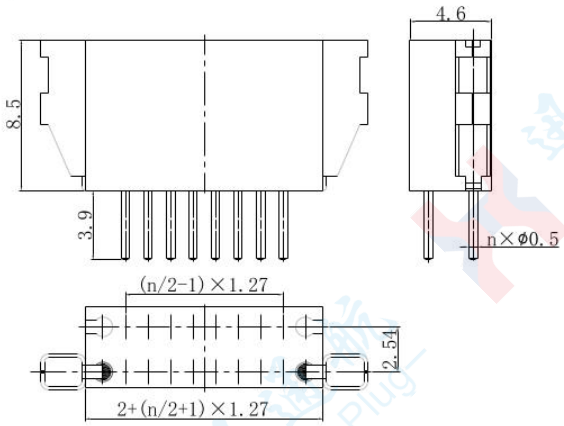

J103D-□TJNS

J30JY Series Micro-Rectangular Rainproof Electrical Connectors

Product Features

- Available in 10 contact counts: 9, 15, 21, 25, 31, 37, 51, 66, 74, and 100
- Adopts stranded twisted pins with a contact pitch of 1.27mm and row spacing of 1.1mm
- Core Advantages: High Density, Miniaturization, High Reliability
- Application: Interconnection of electrical circuit systems requiring connectors to be used in humid outdoor environments
- Suitable Wire Cross-Sectional Area: 0.1mm² ~ 0.15mm²
- Executed Standard: "Detailed Specification for J30JY Series Micro-Rectangular Rainproof Electrical Connectors"

Technical Characteristics

- Rated Curren: 3A
- Insulation Resistance: ≥ 5000MΩ 500VDC
- Contact Resistance: ≤ 10mΩ
- Dielectric Withstand Voltage: 800V
- Operating Temperature: -55℃ ~ +125℃
- Mechanical Life: 500 Cycles
- Random Vibration: Power Spectral Density 0.4G²/Hz, Total Acceleration RMS Value 23.1G
- Vibration: 10Hz ~ 2000Hz 196m/s²
- Shock: 735m/s² 11ms
- Salt Spray: 96h

Spectrum Arrangement

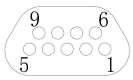

J30JY-9 contact

J30JY-15contact

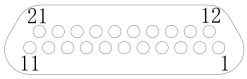

J30JY-21contact

J30JY-25contact

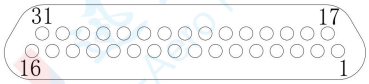

J30JY-31Contact

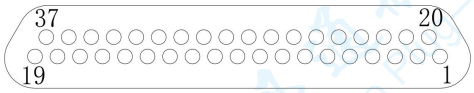

J30JY-37Contact

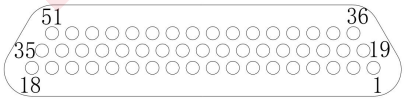

J30JY-51Contact

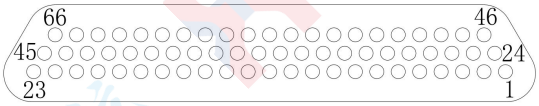

J30JY-66Contact

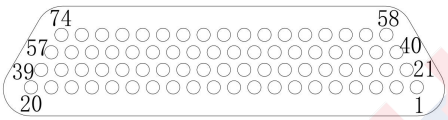

J30JY-74Contact

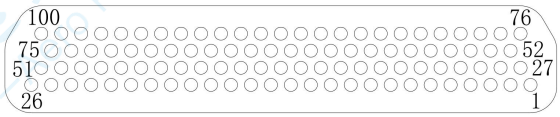

J30JY-100Contact

Note: Viewed from the mating end of the plug

Ordering Code

J30J Y - X TJ/ZK L/P37
① ② ③ ④ ⑤

① Main Designation: J30J

② Rainproof Function: Y

③ Number of Contacts: 9 、15 、21 、25、31 、37 、51 、66、74、100

④ Contact Type: TJ - Plug with Pins ZK - Socket with Jacks

TJ and ZK are fixed combinations

⑤ Locking Assembly: L/P37 (Refer to the Notes on J30J Series Locking Assemblies)

Note: Supplementary Instructions: When selecting products, customers shall specify crimped wire specifications in parentheses, such as conductor cross-sectional area, length, and color. It is recommended that users choose injection-molded wires. Provide the wiring relationship if special wiring requirements are needed.

J30JY Crimp Basic Type \ J30JY-TJ & J30JY-ZK

.Plug

.J30JY-9、15、21、25、31、37、51、66、74、100TJ

Product Stereogram

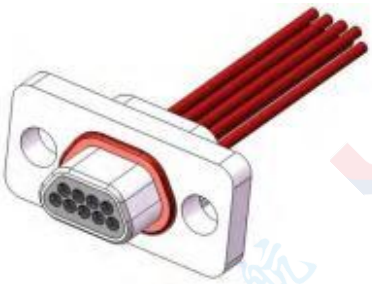

J30JY-9TJ

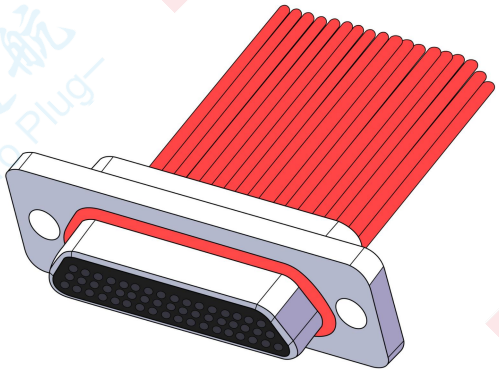

J30JY-51TJ

.Socket

.J30JY-9、15、21、25、31、37、51、66、74、100ZK

Product Stereogram

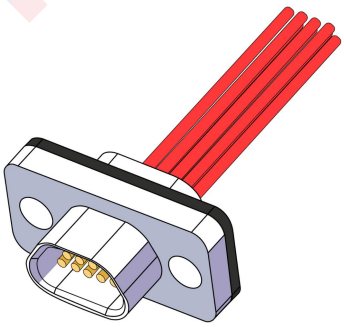

J30JY-9ZK

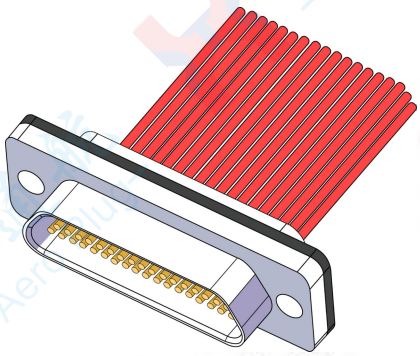

J30JY-51ZK

Dimension Diagram of the Plug's Outer Shape

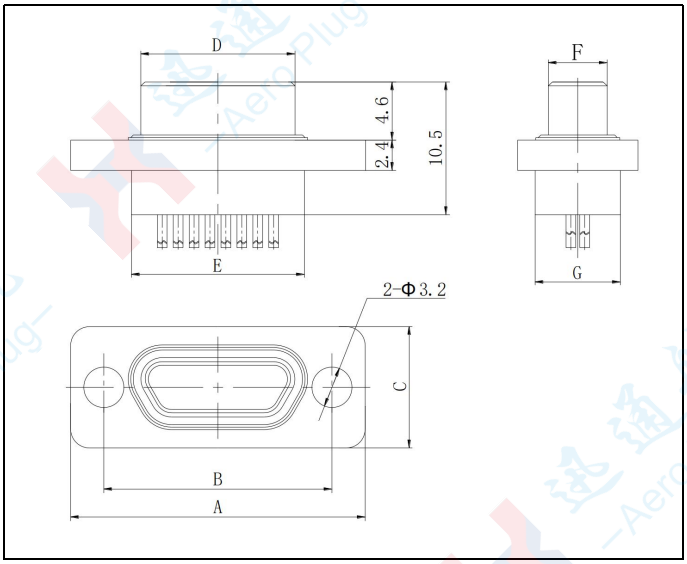

J30JY-□TJ

J30JY Crimp Basic Type: J30JY-TJ

Ordering Code	A	B	C	D	E	F	G
J30JY-9TJ	19.6	14.3	9.6	8.3	9.9	4.7	6.8
J30JY-15TJ	23.5	18.2	9.6	12.3	13.8	4.7	6.8
J30JY-21TJ	27.4	22.0	9.6	16.0	17.6	4.7	6.8
J30JY-25TJ	29.8	24.5	9.6	18.6	20.2	4.7	6.8
J30JY-31TJ	33.6	28.3	9.6	22.4	24	4.7	6.8
J30JY-37TJ	37.4	32.2	9.6	26.3	27.8	4.7	6.8
J30JY-51TJ	36.4	30.86	11.6	25.0	26.6	5.8	7.9
J30JY-66TJ	42.9	37.3	11.6	31.4	33	5.8	7.9
J30JY-74TJ	38.8	33.5	13.6	27.5	29.1	6.8	9.1
J30JY-100TJ	54.7	45.7	13.6	35	36.3	6.8	9.1

Dimension Drawing of the Socket

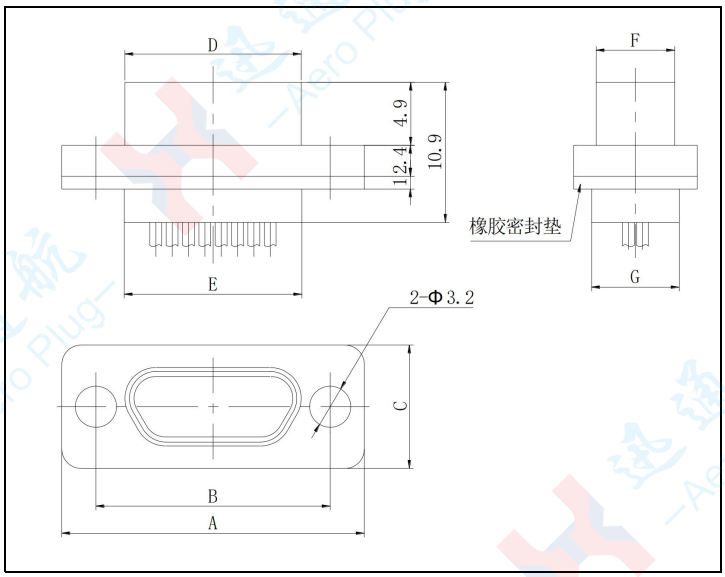

J30JY-□ZK

J30JY Crimp Basic Type: J30JY-ZK

Ordering Code	A	B	C	D	E	F	G
J30JY-9ZK	19.6	14.3	9.6	9.8	9.9	6.1	6.8
J30JY-15ZK	23.5	18.2	9.6	13.7	13.8	6.1	6.8
J30JY-21ZK	27.4	22.0	9.6	17.4	17.6	6.1	6.8
J30JY-25ZK	29.8	24.5	9.6	20.0	20.2	6.1	6.8
J30JY-31ZK	33.6	28.3	9.6	23.8	24	6.1	6.8
J30JY-37ZK	37.4	32.2	9.6	27.7	27.8	6.1	6.8
J30JY-51ZK	36.4	30.86	11.6	26.5	26.6	7.2	7.9
J30JY-66ZK	42.9	37.3	11.6	32.9	33	7.2	7.9
J30JY-74ZK	38.8	33.5	13.6	29.0	29.1	8.3	9.1
J30JY-100ZK	54.7	45.7	13.6	36.6	36.6	8.3	9.1

Overall Dimensions After Mating

Overall Dimensions After Mating

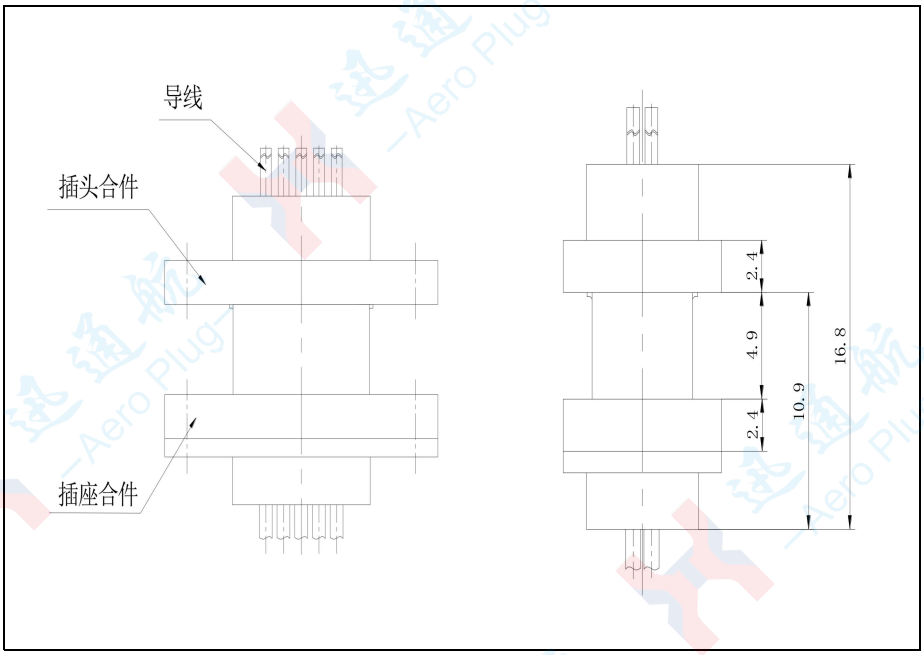

Front View

Left View

A bright future can be created
together by us!

迅通航®
—Aero Plug—

Telephone: 13691982378 (Contact person: Mr. Li)
E - mail: Xuntonghang136@163.com
Address: 3rd Floor, Building 60, Shunchengji Industrial Park, Dalang Sub - district,
Longhua District, Shenzhen City, Shenzhen XuntonghangElectronic Technology Co., Ltd.